Maintenance planning

MAINTENANCE CHART

Maintenance action	Check	Adjust	Cleaning	Grease	Storing	Bleed	Change fluid	Replace	Page no.
Flexible Maintenance									
Clutch pedal adjustment	x								**7-13**
Brake pedals - Check Adjusting height of service brake pedals	x								**7-13**
Alternator drive system Belt - Check ALTERNATOR BELT INSPECTION	x								**7-14**
Air cleaner - Check AIR FILTER VALVE	x								**7-14**
External lighting - Check TRACTOR LIGHT	x								**7-15**
Hand brake lever - Adjust HANDBRAKE		x							**7-15**
Engine cooling system - Check RADIATOR FLUID LEVEL	x								**7-16**
Air conditioner condenser, radiator, and intercooler			x						**7-16**
Tyres - pressure check TYRE PRESSURE	x								**7-17**
CHECK THE WHEEL NUTS FOR TIGHTNESS WHEEL DISKS NUT TORQUE	x								**7-17**
WHEN THE WARNING LAMP LIGHTS									
Air cleaner - Cleaning			x						**7-18**
EVERY 10 HOURS OR DAILY									
Engine lubrication system - Check ENGINE OIL LEVEL	x								**7-19**
EVERY 50 HOURS									
Rear three-point hitch linkage - Grease				x					
EVERY 300 HOURS									
Oil filters - Replace TRANSMISSION AND HYDRAULIC LIFT OIL FILTER								x	
Air cleaner - Cleaning DRY AIR FILTER, EXTERNAL CARTRIDGE			x						**7-22**
Alternator drive system Belt - Check ALTERNATOR BELT INSPECTION	x								**7-22**
Battery - Check BATTERY CAPACITY 80 Ah	x								
Steering knuckle and king pin - Grease KING PIN BEARINGS 4WD				x					**7-23**
Transmission - Check TRANSMISSION AND HYDRAULIC LIFT OIL	x								**7-24**
Axle housing - Check FRONT AXLE HOUSING 4WD	x								**7-24**
Wheel hub - Check FRONT AXLE REDUCTION HUBS 4WD	x								**7-24**
EVERY 600 HOURS									
Engine lubrication system - Replace								x	**7-24**
Fuel filters - Replace FUEL FILTER								x	**7-26**
EVERY 1200 HOURS									
Air cleaner - Cleaning DRY AIR FILTER, EXTERNAL CARTRIDGE			x						**7-27**
Valves - Check ENGINE VALVES	x								**7-28**
Fuel tank - Cleaning FUEL TANK			x						**7-29**
Drive shaft - Check DRIVE SHAFT SLEEVE FOR 4WD FRONT AXLE CONNECTION	x								**7-30**
EVERY 1200 HOURS OR EVERY 2 YEARS									
Axle housing - Change fluid FRONT AXLE HOUSING - 4WD							x		**7-31**
Wheel hub - Change fluid FRONT AXLE HOUSING							x		**7-31**
Engine cooling system - Change fluid ENGINE COOLING SYSTEM							x		**7-32**

PREVIEW - YOUFIXTHIS.COM

Download full manual at youfixthis.com

8 - TROUBLESHOOTING

Alarm(s)

HYDRAULIC REMOTE CONTROL VALVES

Problem	Possible Cause	Correction
Engagement impossible.	The male coupler is not compatible.	Call your dealer to have the male coupling replaced.
	Dirt or soil in the female coupling.	Spray solvent inside and outside the female pressure point and wait for a few seconds for the solvent to react. Perform some hooking/unhooking operations and if necessary clean again to make the coupling smooth. If coupling is still impossible, contact your dealer to have the linkage replaced.
Difficult engagement.	Dirt or soil in the female coupling.	Spray solvent inside and outside the female pressure point as and wait for a few seconds for the solvent to react. Perform some hooking/unhooking operations and if necessary clean again to make the coupling smooth. If coupling is still impossible, contact your dealer to have the linkage replaced.
Oil leakage from the female coupling after disengagement of the male connector.	Dirt or soil in the seal area.	Spray solvent inside and outside the female pressure point and wait for a few seconds for the solvent to react. Perform some hooking/unhooking operations and if necessary clean again to make clean coupling smooth. If coupling is still impossible, contact your dealer to have the linkage replaced.
	Valve gasket damaged.	Call your dealer to have the connector replaced.
	Internal gaskets damaged.	Call your dealer to have the connector replaced.
Oil leakage from the couplings after engagement.	Dirt or soil in the seal area.	Spray solvent inside and outside the female pressure point and wait for a few seconds for the solvent to react. Perform some hooking /unhooking operations and if necessary clean again to make the coupling smooth. If coupling is still impossible, contact your dealer to have the linkage replaced.
	Gasket damaged.	Disconnect the couplers. Call your dealer to have the damaged gasket and possible the anti–extrusion ring replaced.

PREVIEW - YOUFIXTHIS.COM

Download full manual at youfixthis.com

9 - SPECIFICATIONS

GENERAL DIMENSIONS

Tyre Combinations	Comb. I	Comb. II	Comb. III	Comb. IV	Comb. V
FRONT	240/70R16	280/70R16	280/70R20	280/70R18	260/70R20
REAR	360/70R20	360/70R24	380/70R28	380/70R24	420/70R24

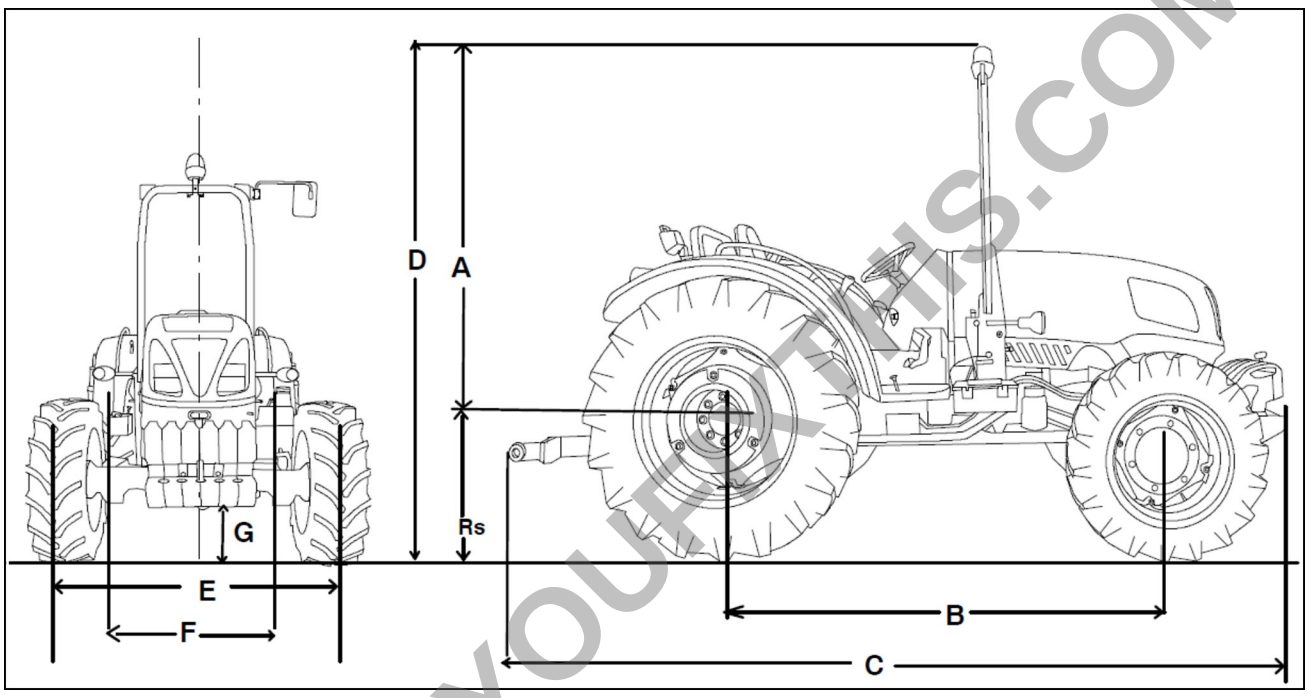

DIEMNTION2 1

Dimensions mm (in)	Comb. I	Comb. II	Comb. III	Comb. IV	Comb. V
Radius Index	500 mm (20 in)	550 mm (22 in)	625 mm (25 in)	575 mm (23 in)	600 mm (24 in)
A ROPS	1686 mm (66 in)				
B	2063 mm (81 in)				
C	3940 mm (155 in)	3940 mm (155 in)	3940 mm (155 in)	3940 mm (155 in)	3940 mm (155 in)
D (ROPS)	A(ROPS) + Radius Index				
E (front)	1225 - 1319 mm (48 - 52 in)	1225 - 1319 mm (48 - 52 in)	1189 - 1487 mm (47 - 59 in)	1245 - 1351 mm (49 - 53 in)	1255 - 1487 mm (49 - 59 in)
F (rear)	1174 - 1486 mm (46 - 59 in)	1148 - 1513 mm (45 - 60 in)	1259 - 1659 mm (50 - 65 in)	1274 - 1513 mm (50 - 60 in)	1274 - 1513 mm (50 - 60 in)
G	333 mm (13 in)	358 mm (14 in)	403 mm (16 in)	381 mm (15 in)	390 mm (15 in)

PREVIEW - YOUFIXTHIS.COM

Download full manual at youfixthis.com

4 - OPERATING INSTRUCTIONS

Starting the unit

STARTING THE ENGINE

STARTING THE ENGINE

a. If the tractor has not been used for some time, or if started up for the first time at a low surrounding temperature, actuate the fuel pump starting lever around twenty times.
b. Ensure that both gear levers are in neutral position.
c. Move the throttle lever to around the half way position.
d. Turn the ignition key to position C, Release the key as soon as the engine starts.

STARTING IN A LOW EXTERNAL TEMPERATURE

NOTE: *When the external temperature is low and the engine is cold, cover the radiator before starting so that the engine coolant can quickly reach operating temperature. Then remove the cover.*

STARTING IN LOW OUTSIDE TEMPERATURE CONDITIONS

When starting the engine with low outside temperatures and when the engine is cold, proceed as follows:

1. Avoid running down the battery. Any single engine starting attempt shoud not last longer than **15 s**. If the engine fires but does not start, continue the attempt up to a maximum of **30 s** .
2. Wait for at least one minute between each attempt to start the engine.
3. To avoid excessively running down the battery, do not make more than six attempts to start the engine.

PREVIEW - YOUFIXTHIS.COM

Download full manual at youfixthis.com

Forward controls

Front controls

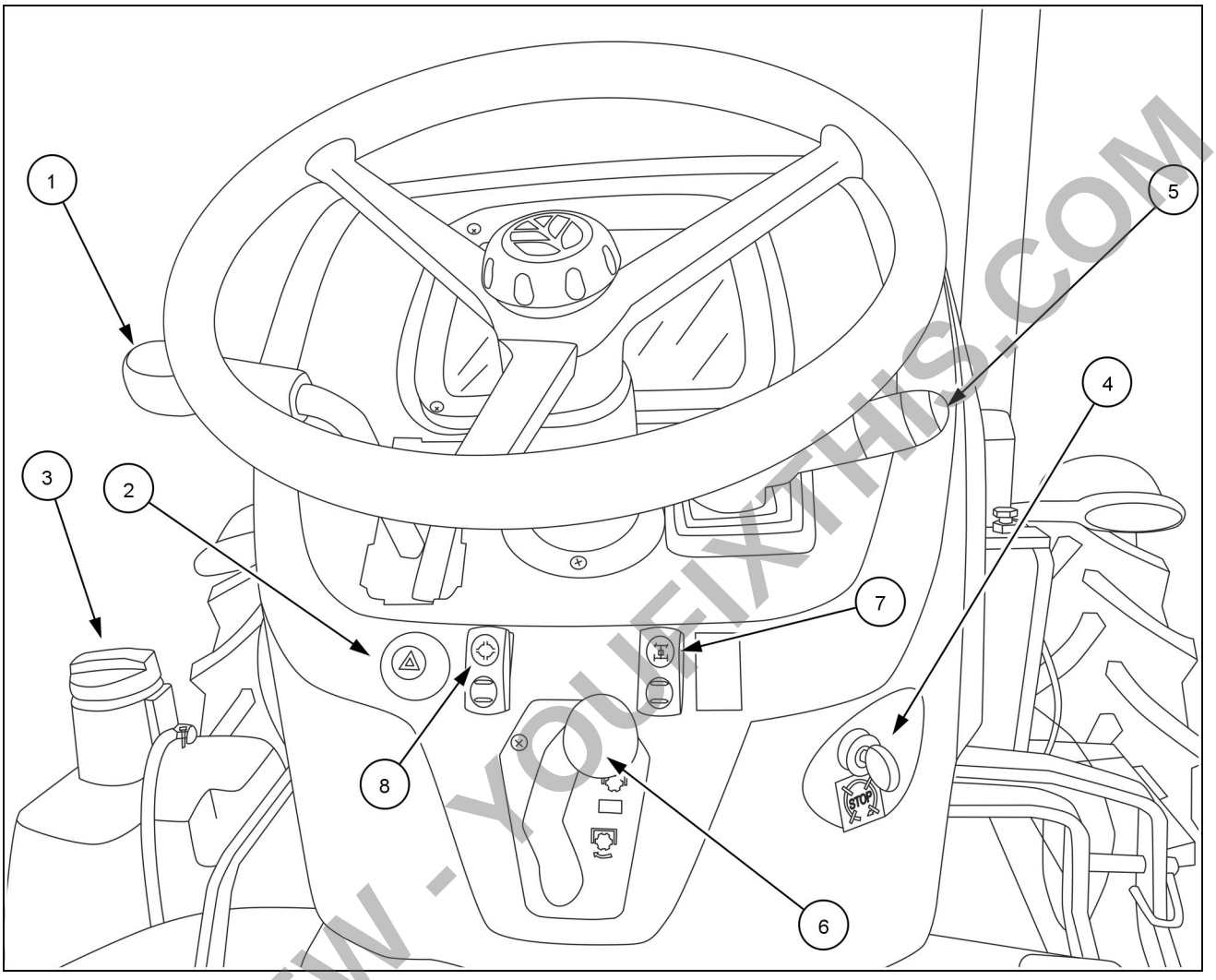

SAM_0129 1

1. Shuttle lever. (12 forward and 12 reverse gear models)
2. Hazard warning light switch.
3. Lockable fuel tank cap
4. Ignition key.
5. Light / Turn lever.
6. Power take-off engagement lever.
7. 4WD engagement switch
8. Diff-lock engagement switch

PREVIEW - YOUFIXTHIS.COM

Download full manual at youfixthis.com

Cold temperature operation

Engines operating in temperatures below **10.4 °F** (**-12 °C**) or in arduous conditions should have the oil changed every **300 h** of operation. The filter must be changed regularly as prescribed after **600 h**.

Diesel fuel sulphur content

In some countries, locally available diesel may have a high sulphur content, in which case the oil and filter change period should be shortened as follows:

sulphur content between **0.5 %** / **1.0 %**
oil change every **300 h**;

sulphur content between **1.0 %** / **1.3 %**
oil change every **150 h**;

If in doubt, or if it is not possible to check the instructions given, keep to the interval recommended in the Operator's Manual.

Draining off the oil and changing the filter

place a container under the engine sump;
remove the drain plug **(1)** from the sump (oneon each side) and drain off the oil;
screw the plugs back on;
unscrew the filter **(2)**, drain it of the remaining oil and discard it as required by the current regulations in your country;
clean the surface of the filter seat;
lightly oil the seal of the new filter, screw it down into contact with the support and tighten it by hand by 3/4 of a turn, or a full turn at most;
fill up with new oil through the fill point **(3)**after opening cab **(4)** ;

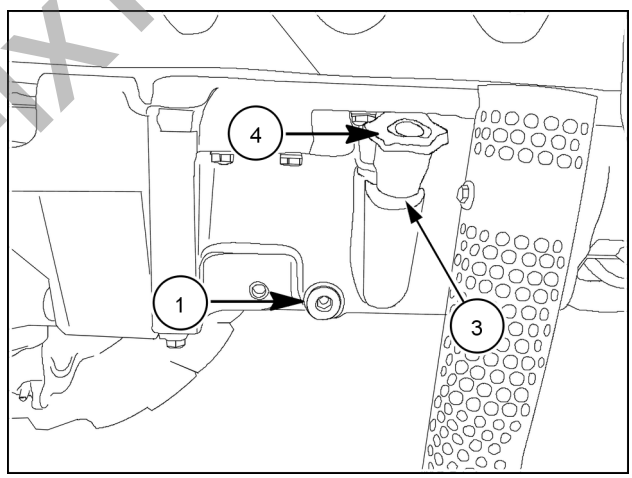

KARTERTAPA 1

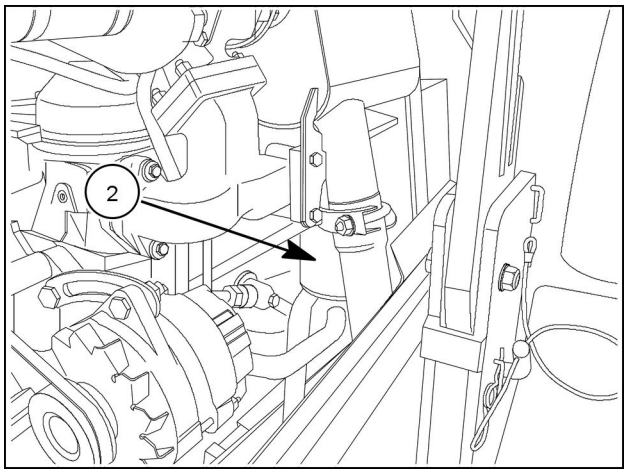

MTRYAGFILTRE 2

PREVIEW - YOUFIXTHIS.COM

Download full manual at youfixthis.com

Maintenance action	Check	Adjust	Cleaning	Grease	Storing	Bleed	Change fluid	Replace	Page no.
Transmission - Change fluid TRANSMISSION AND HYDRAULIC LIFT OIL							x		**7-33**
EVERY 1800 HOURS									
Fuel injectors - Check INJECTORS	x								**7-35**
GENERAL MAINTENANCE									
Fuel injection system - Bleed BLEEDING THE FUEL SYSTEM						x			**7-35**
Battery - Check BATTERY	x								
Fuse and relay box - Replace MAIN FUSE AND RELAY BOX--								x	
Headlight - Adjust FRONT HEADLIGHT ADJUSTMENT		x							**7-42**
External lighting - Replace REPLACING THE FRONT HEADLIGHT BULBS								x	**7-44**
Platform, cab, bodywork, and decals - Cleaning			x						**7-45**
STORAGE									
TRACTOR STORAGE						x			**7-47**

PREVIEW - YOUFIXTHIS.COM

Download full manual at youfixthis.com

ENGINE

Problem	Possible Cause	Correction
The engine will not start or is difficult to start.	Incorrect starting procedure.	See starting procedure.
	Fuel level low or empty.	Check fuel level.
	Air in fuel system.	Bleed fuel system.
	Engine oil viscosity not right.	Use oil of right viscosity.
	Fuel not suitable for ambient temperature.	Use correct type of fuel for temperature conditions.
	Fuel system contaminated.	Clean system.
	Fuel filter clogged.	Replace filter element.
	Fuel injector fault.	Contact your dealer.
The engine does not run properly and/or cuts out.	Fuel system contaminated.	Clean system.
	Fuel injector fault	Contact your dealer
Engine does not reach maximum power.	Engine overload.	Change to lower gear or reduce load.
	Air filter clogged.	Carry out maintenance on air filter.
	Incorrect fuel type.	Use the right fuel.
	Low engine operating temperature.	Check thermostat.
	Fuel injector fault.	Have your dealer check the injectors.
	Implement incorrectly set.	See equipment manual.
	Valve clearance wrong.	Check and adjust.
	Idling speed too low.	Contact your dealer.
Abnormal engine knocking.	Oil level low.	Top up oil.
	Oil pressure low.	Contact your dealer.
Low engine operating temperature.	Thermostat malfunction.	Replace thermostat.
Oil pressure low.	Oil level low.	Add oil as required.
	Oil grade or viscosity wrong.	Drain and refill with oil of correct grade and viscosity.
Excessive oil consumption.	Oil level too high.	Reduce oil level.
	Oil viscosity wrong.	Use oil of correct viscosity.
	Oil leaking.	Repair leaks.
	Breather pipe filter clogged.	Replace breather pipe filter.
Engine overheating.	Radiator core clogged.	Clean.
	Engine overload.	Change to lower gear or reduce load.
	Engine oil level low.	Top up oil level.
	Coolant level low.	Top up fluid level in expansion tank; check system for leaks.
	Radiator cap defective.	Replace cap.
	Fan belt slipping or worn.	Check tensioning device; replace belt if worn.
	Cooling system clogged.	Flush cooling system.
	Thermostat malfunction.	Check thermostat.
	Hoses leaking.	Tighten hose connectors.
	Temperature indicator or gauge malfunction.	Contact your dealer.
Excessive fuel consumption.	Wrong fuel type.	Use right fuel type.
	Air filter dirty or clogged.	Carry out maintenance on air filter.
	Engine overload.	Change to lower gear or reduce load.
	Valve clearance wrong.	Check and adjust.
	Equipment wrongly adjusted.	Refer to equipment manual for correct operation.
	Engine temperature too low.	Check thermostat.
	Too much ballast.	Adjust ballast to correct weight.
	Fuel injector nozzles blocked.	Have your dealer service the injectors.

PREVIEW - YOUFIXTHIS.COM

Download full manual at youfixthis.com

WEIGHTS (OPTIONAL)(kg)

MODELS	Front support	Front end weights	Rear wheel weights	TOTAL
All models	30	4x30:120	4x30:120	270
All models	30	4x30:120	4x50:200	350
All models	30	4x30:120	6x50:300	450
All models	30	6x30:180	4x30:120	330
All models	30	6x30:180	4x50:200	410
All models	30	6x30:180	6x50:300	510
All models	90	10x40:400	4x30:120	610
All models	90	10x40:400	4x50:200	690
All models	90	10x40:400	6x50:300	790

TRACTOR WEIGHTS

MAXIMUM TRACTOR WEIGHT WITH ROPS

MODELS	Without ballast	With ballast
	kg (lb)	kg (lb)
TD4.70F	**2820.0 kg (6217.0 lb)**	**3610.0 kg (7958.7 lb)**
TD4.80F	**2820.0 kg (6217.0 lb)**	**3610.0 kg (7958.7 lb)**
TD4.90F	**2820.0 kg (6217.0 lb)**	**3610.0 kg (7958.7 lb)**

PREVIEW - YOUFIXTHIS.COM

Download full manual at youfixthis.com

Stopping the unit

STOPPING THE ENGINE

STARTING THE TRACTOR

Press the clutch pedal and move the main gear lever and creeper lever to the desired settings **3-7**.
Accelerate the engine as necessary.
Release the handbrake lever and engage the clutch, releasing the pedal slowly.

ATTENTION: *To extend the service life of the tyres and the transmission components, it is advisable not to use the tractor continuously at full power when working at speeds of less than* ***7 km/h*** *(* ***4.35 mph*** *), particularly when the tractor is excessively ballasted. It is not advisable to ballast the tractor too heavily when towing heavy loads and travelling at low speeds. Follow the instructions given in this chapter on ballast and hitch components.*

STOPPING THE TRACTOR

Reduce engine speed.
Depress the transmission clutch pedal and brake.

With the tractor stationary, move the main shift and range gear levers to neutral, release the clutch pedal and engage the handbrake.

STOPPING THE ENGINE

ATTENTION: *Before stopping the engine, let it idle at 1000 speed for at least three minutes.*

Turn the ignition key **(1)** to the STOP position **(A)**

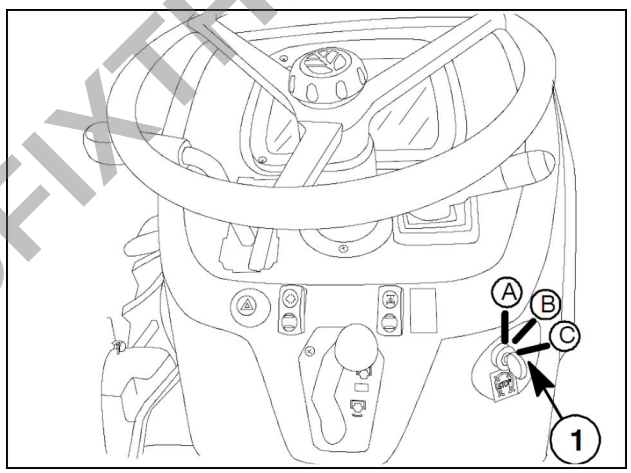

KONTAK 1

PREVIEW - YOUFIXTHIS.COM

Download full manual at youfixthis.com

Fuel tank cap

To unlock the fuel tank cap **(1)** , turn the ignition key counter clockwise. To lock the fuel tank cap **(1)** , turn the ignition key clockwise.

Fuel tank capacity: **79 L**

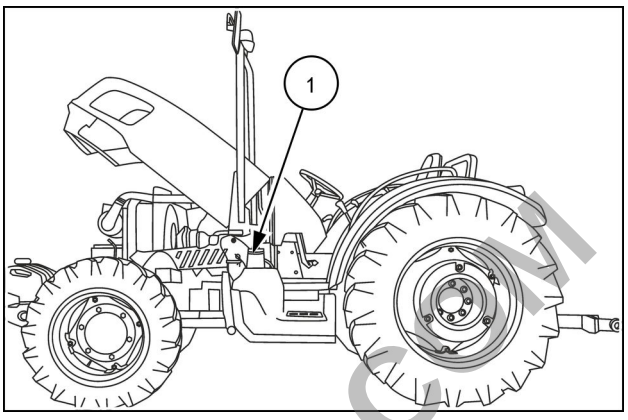

SAM_0120 1

KEY- START SWITCH

To operate the four key functions, turn the key **(1)** through the following positions:
(A) No power to circuits (key can be removed). Engine stopped: automatic activation of fuel injection cut–off.
(B) Engine start presetting: operation of panel lights and instruments. Power supplied to various circuits.
(C) Starting the engine: when released, the key returns automatically to position **(B)**.

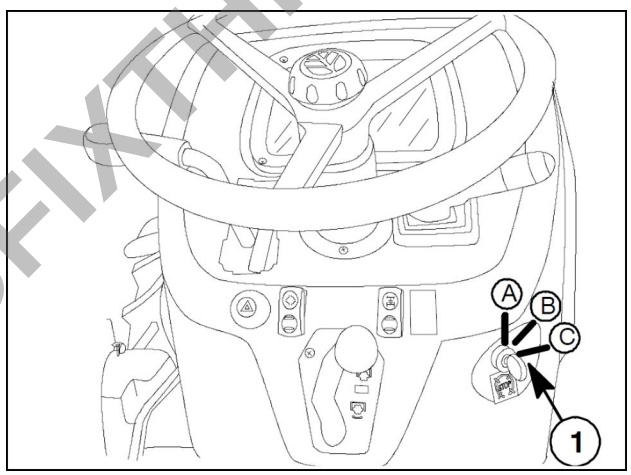

KONTAK 1

LIGHT-/ TURN LEVER

MULTI–FUNCTION CONTROL

The multi–function stalk controls the lights, horn, turn indicators and headlight flasher and is also used to switch from dipped to main beam front headlights.

Direction indicators

To indicate a left turn, push the stalk **(1)** forward to position **(B)**
To indicate a right turn, pull the stalk **(1)** , back to position **(A)**.

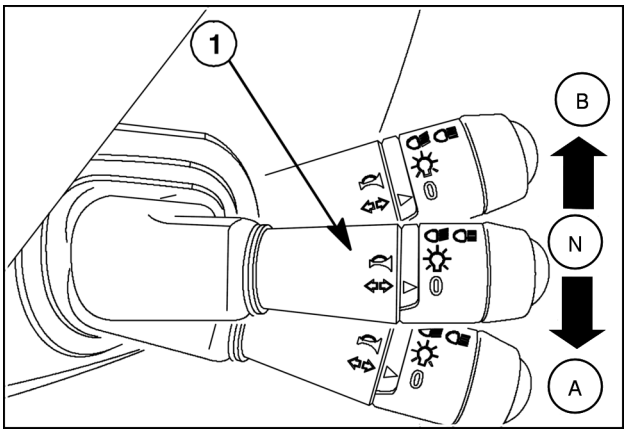

COKFONK1_ 1

PREVIEW - YOUFIXTHIS.COM
Download full manual at youfixthis.com

Fuel filters - Replace FUEL FILTER

NOTE: *Before loosening or removing parts of the injection system, thoroughly clean the area surrounding the components involved in the maintenance work in order to avoid contaminating the system.*

Place a container under the filter **(1)** and unscrew the drain plug **(2)**.
Remove the filter cartridge **(1)**.
Lightly oil the seal, screw the new cartridge down into contact with the support and tighten it by hand by 3/4 of a turn (**15 N·m**).

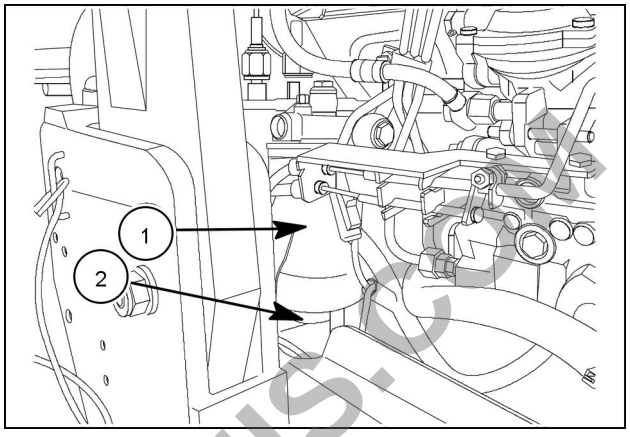

YKTFILTRESI 1

PREVIEW - YOUFIXTHIS.COM

Download full manual at youfixthis.com

PREVIEW ONLY

You're viewing 12 of 194 pages

The full manual includes:

- All 194 pages, complete
- Searchable PDF (find any keyword)
- No watermarks
- Instant download
- Print-ready quality

GET FULL MANUAL NOW

New Holland TD4.70F, TD4.80F, TD4.90F Operator Manual

Scan or click anywhere
youfixthis.com

Click anywhere on this page to get the full manual