How To Use Figure Search

1). Locate the figure list index at the beginning of manual

examples:

01A01 FRONT WHEEL ASSEMBLY - 2100,2110,2120,2150,2300,2310,3055,3100,3120,3150,3190,3300,3310,3550,4140

01A01[C] FRONT WHEEL ASSEMBLY, W/16" WHEELS - 3400, 3500, 3550, 4400, 4500, 4410, 5100, 5200, 5190, 7100, 7200

01B01 STANDARD REAR WHEELS - 2000, 4100 & 3000 EXCEPT 3550

01B01[A] STANDARD REAR WHEELS - 3500, 3550, 5000, 7000, 4000 EXCEPT 4110

01B02 POWER ADJUSTABLE REAR WHEELS - 2000, 3000, 4140

Use the “search” feature in adobe to jump to the figure number.

Press **Ctrl** key, and letter **F** on the keyboard, at the same time. This will bring up the “search” feature in Adobe Acrobat. Then simply type in the figure number you wish to locate, and press enter.

Adobe takes you immediately to that page!

PREVIEW - YOUFIXTHIS.COM

Download full manual at youfixthis.com

01 -01 HYDRAULIC PICTORIAL INDEX - TRANSMISSION AND PTO CLUTCH LUBRICATION, MANUAL SHIFT TRANSMISSION

Ref	Part Number	Qty	Description
1			Hose, Transmission Regulator Valve Supply, See Figure(s) : 06-14(1)
2			Hose, Pump to Filter, See Figure(s) : 06-14
3			Filter, Left-Hand, See Figure(s) : 08-03
4			Cooler, Hydraulic Oil, See Figure(s) : 08-02
5			Tube, Pump Supply, See Figure(s) : 06-14 (1)
6			Hose, Cooler Supply and Outlet, See Figure(s) : 08-01
7			Power Takeoff Valve Assy, See Figure(s) : 06-23
8			Hose, Power Takeoff Valve Supply, See Figure(s) : 06-15 (1)
9			Hose, Power Takeoff Vavle Supply, See Figure(s) : 06-15 (1)

PREVIEW - YOUFIXTHIS.COM

Download full manual at youfixthis.com

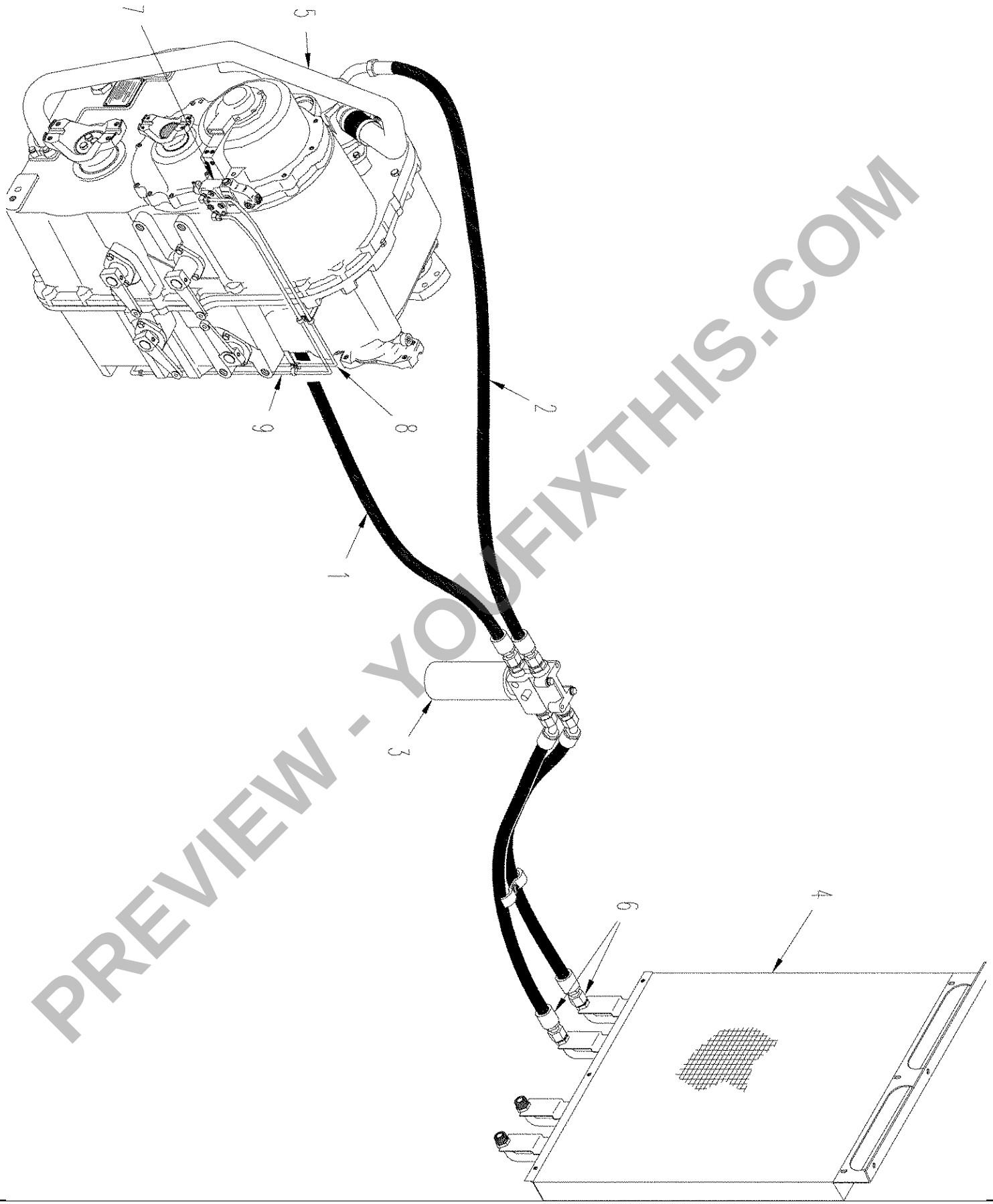

PREVIEW - YOUFIXTHIS.COM

Download full manual at youfixthis.com

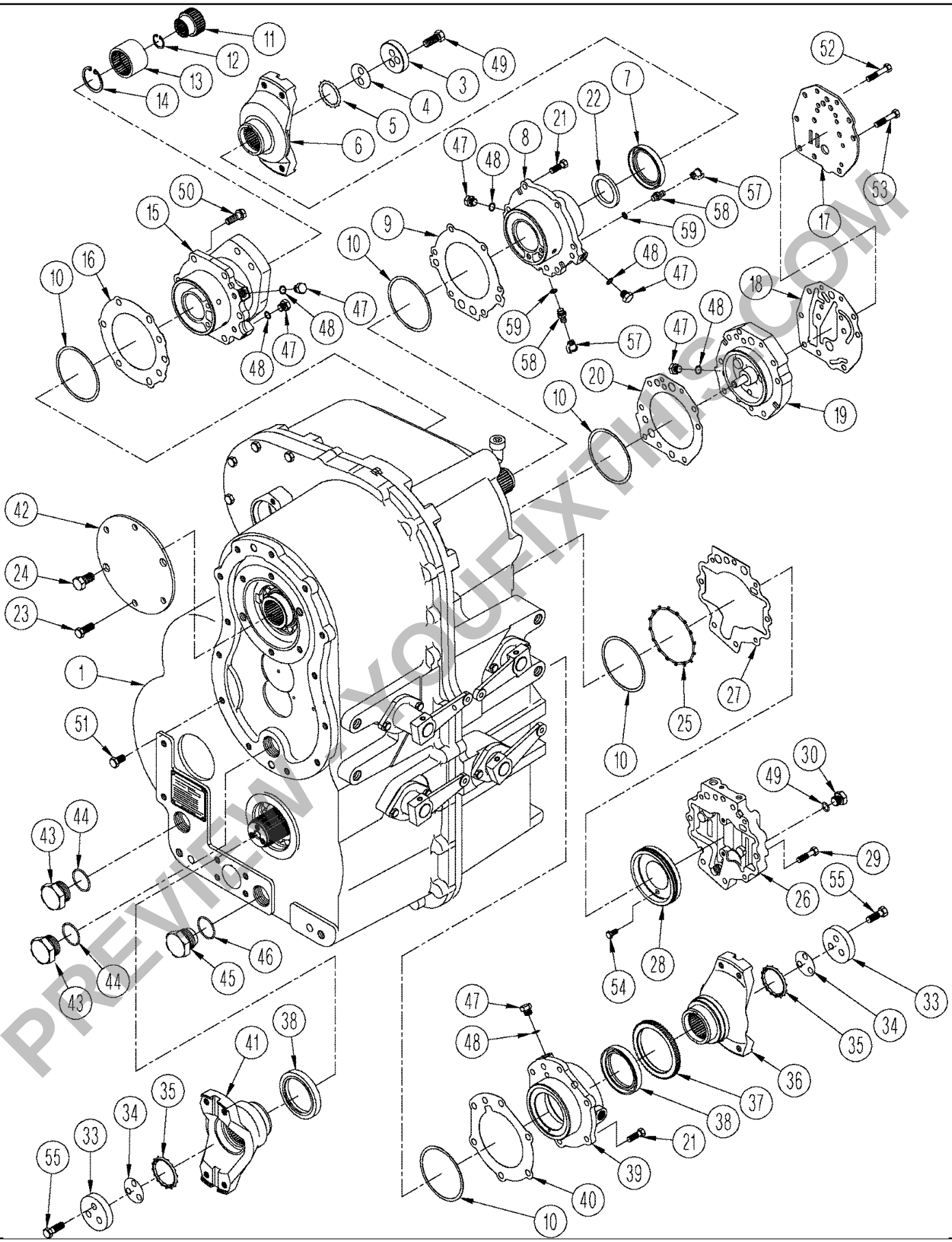

PREVIEW - YOUFIXTHIS.COM

Download full manual at youfixthis.com

09 -12 INTERIOR TRIM - STANDARD AND DELUXE CABS

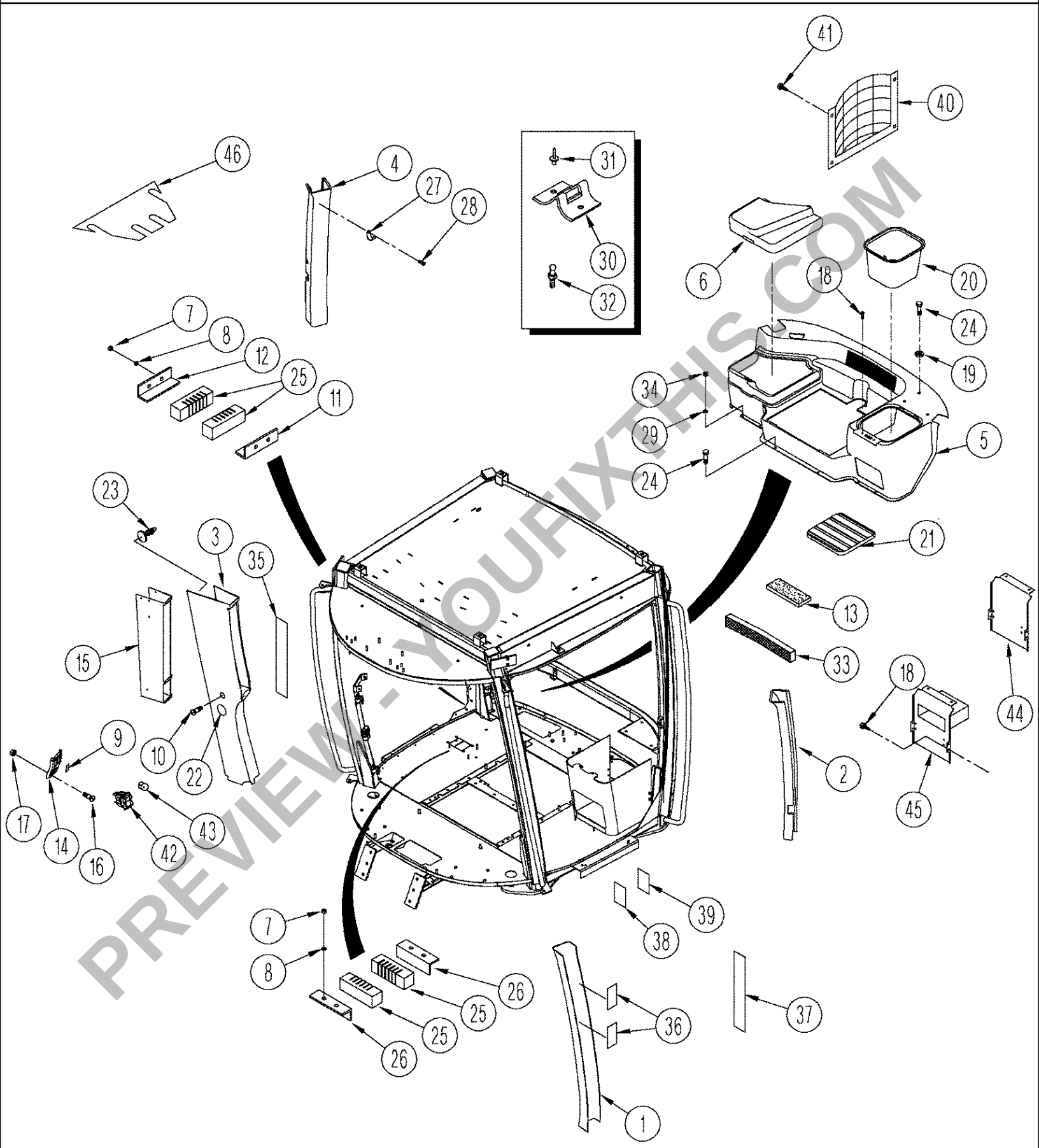

PREVIEW - YOUFIXTHIS.COM

Download full manual at youfixthis.com

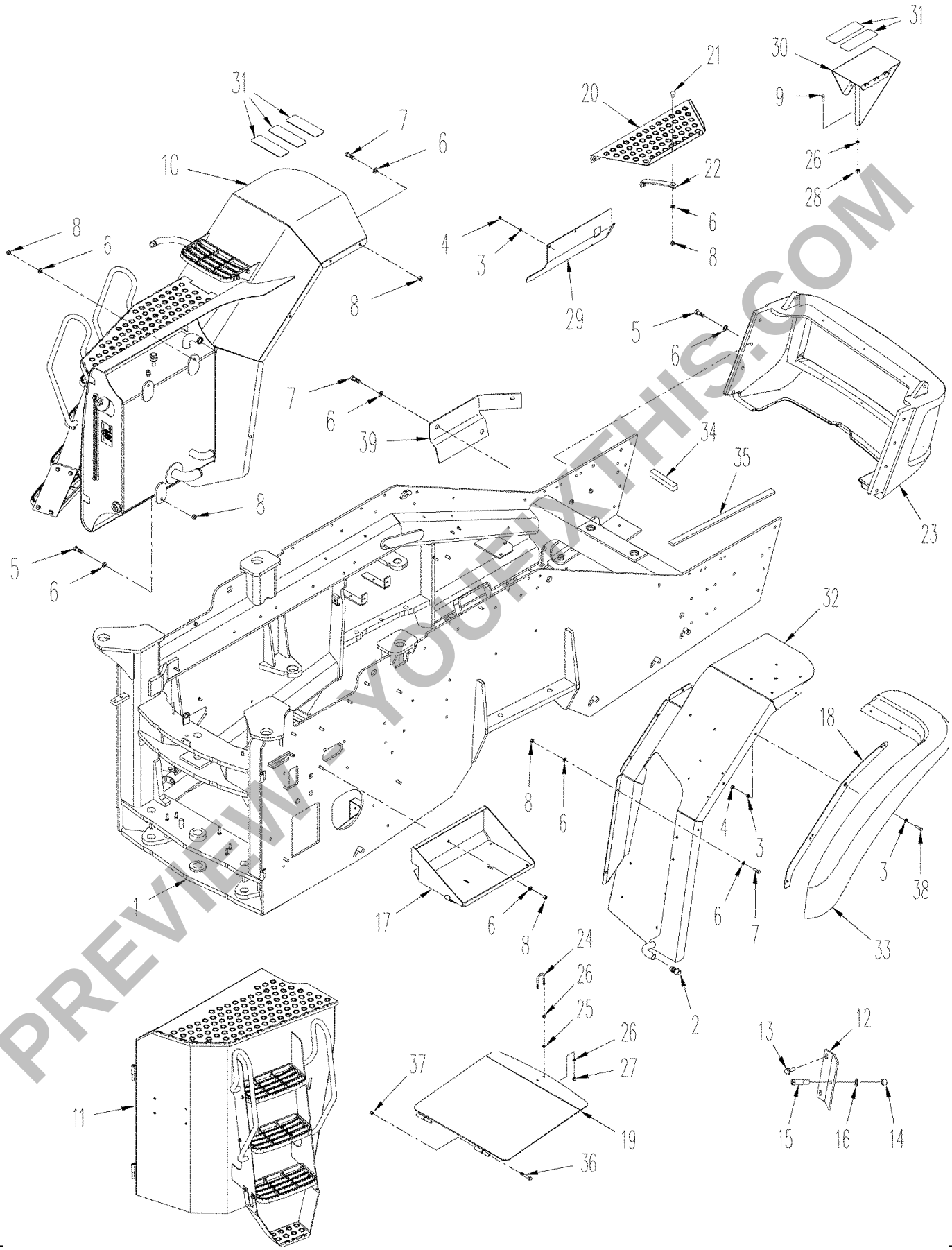

PREVIEW - YOUFIXTHIS.COM

Download full manual at youfixthis.com

Figure Search for TJ425 TRACTOR

06 -15[13] MANUAL SHIFT TRANSMISSION - LOCKOUT VALVE ASSY
06 -15[14] MANUAL SHIFT TRANSMISSION - REGULATOR VALVE ASSY
06 -15[2] POWER TAKEOFF - CLUTCH LUBRICATION, POWER SHIFT TRANSMISSION
06 -16 POWER SHIFT TRANSMISSION - VALVE AND PUMP MOUNTING
06 -17 POWER SHIFT TRANSMISSION - COVERS AND YOKES
06 -18 POWER SHIFT TRANSMISSION - REAR HOUSING
06 -19 POWER SHIFT TRANSMISSION - HOUSING AND CLUTCHES
06 -20 POWER SHIFT TRANSMISSION - REGULATOR VALVE ASSY
06 -21 POWER SHIFT TRANSMISSION - RANGE SELECTOR VALVE
06 -22 VALVE ASSY PULSE WITH MODULATION
06 -23 VALVE ASSY POWER TAKE OFF
06 -24[1] POWER SHIFT TRANSMISSION - INPUT SHAFT ASSY
06 -24[2] POWER SHIFT TRANSMISSION - INPUT SHAFT ASSY
06 -26 POWER SHIFT TRANSMISSION - SECOND SHAFT ASSY
06 -27 POWER SHIFT TRANSMISSION - THIRD SHAFT ASSY
06 -28[1] POWER SHIFT TRANSMISSION - FOURTH SHAFT ASSY
06 -28[2] POWER SHIFT TRANSMISSION - FOURTH SHAFT ASSY
06 -30[1] POWER SHIFT TRANSMISSION - FIFTH SHAFT ASSY
06 -30[2] POWER SHIFT TRANSMISSION - FIFTH SHAFT ASSY
06 -32 DRIVE SHAFT MOUNTING
06 -33 DRIVE SHAFT
06 -34 POWER TAKEOFF DRIVE SHAFT MOUNTING
06 -35 POWER TAKEOFF DRIVE SHAFT ASSEMBLIES
06 -37[01] POWER TAKEOFF LUBRICATION TJ375 HD, TJ425, TJ450, ASN RVS001801
06 -39 COUPLER MOUNTS WITHOUT POWER TAKEOFF AND THREE POINT HITCH
06 -40 POWER TAKEOFF SAFETY SHEILDS
06 -41 POWER TAKEOFF TRANSFER CASE ASSEMBLY
06 -42 POWER TAKEOFF CLUTCH ASSEMBLY
06 -43 POWER TAKEOFF INPUT SHAFT ASSEMBLY
06 -44 AXLE MOUNTING
06 -45 AXLE ASSY - FRONT COVER (TJ375, TJ425 MANUAL SHIFT)
06 -46 AXLE ASSY - REAR COVER (TJ375, TJ425 MANUAL SHIFT)
06 -47 AXLE ASSY - CENTER AND LEFT-HAND CARRIER (TJ375, TJ425 MANUAL SHIFT)
06 -48 AXLE ASSY - DIFFERENTIAL, WITH DIFFERENTIAL LOCKS (TJ375, TJ425 MANUAL SHIFT)
06 -49 AXLE ASSY - DIFFERENTIAL, WITHOUT DIFFERENTIAL LOCKS (TJ375, TJ425 MANUAL SHIFT)
06 -50 AXLE ASSY - BRAKE AND RIGH-HAND CARRIER (TJ375, TJ425 MANUAL SHIFT)
06 -51 AXLE ASSY - FINAL DRIVE (TJ375, TJ425 MANUAL SHIFT)
06 -52 AXLE ASSY - FRONT COVER (TJ375 HD, TJ425 POWER SHIFT, TJ450)
06 -53 AXLE ASSY - REAR COVER (TJ375 HD, TJ425 POWER SHIFT, TJ450)
06 -54 AXLE ASSY - CENTER AND LEFT-HAND CARRIER (TJ375 HD, TJ425 POWER SHIFT, TJ450)
06 -56 AXLE ASSY - DIFFERENTIAL, WITH DIFFERENTIAL LOCKS (TJ375 HD, TJ425 POWER SHIFT, TJ450)
06 -57 AXLE ASSY - DIFFERENTIAL, WITHOUT DIFFERENTIAL LOCKS (TJ375 HD, TJ425 POWER SHIFT, TJ450)
06 -58 AXLE ASSY - BRAKE AND RIGHT-HAND CARRIER (TJ375 HD, TJ425 POWER SHIFT, TJ450)
06 -60 AXLE ASSY - FINAL DRIVE (TJ375 HD, TJ425 POWER SHIFT, TJ450)
06 -62 AXLE ASSY JET PUMP
07 -01 BRAKE CONTROL
07 -02 BRAKE VALVE ASSY
07-03[01] AXLE HYDRAULICS - SERVICE BRAKE CIRCUIT (TJ375, TJ425 MANUAL SHIFT)

PREVIEW - YOUFIXTHIS.COM

Download full manual at youfixthis.com

01 -15 HYDRAULIC PICTORIAL INDEX - MEGA FLOW HYDRAULIC CIRCUITRY

Ref	Part Number	Qty	Description
1			Gear Pump, See Figure(s) : 08-59
2			Hose, Gear Pump Supply, See Figure(s) : 08-55
3			Hose, Return, See Figure(s) : 08-55
4			Hose, Remote Valve Supply, See Figure(s) : 08-55
5			Hose, Drain, See Figure(s) : 08-55
6			Hose, Load Sense, See Figure(s) : 08-55
7			Remote Auxiliary Valve, See Figure(s) : 08-56
8			Filter, See Figure(s) : 08-60
9			Hose, See Figure(s) : 08-55

PREVIEW - YOUFIXTHIS.COM

Download full manual at youfixthis.com

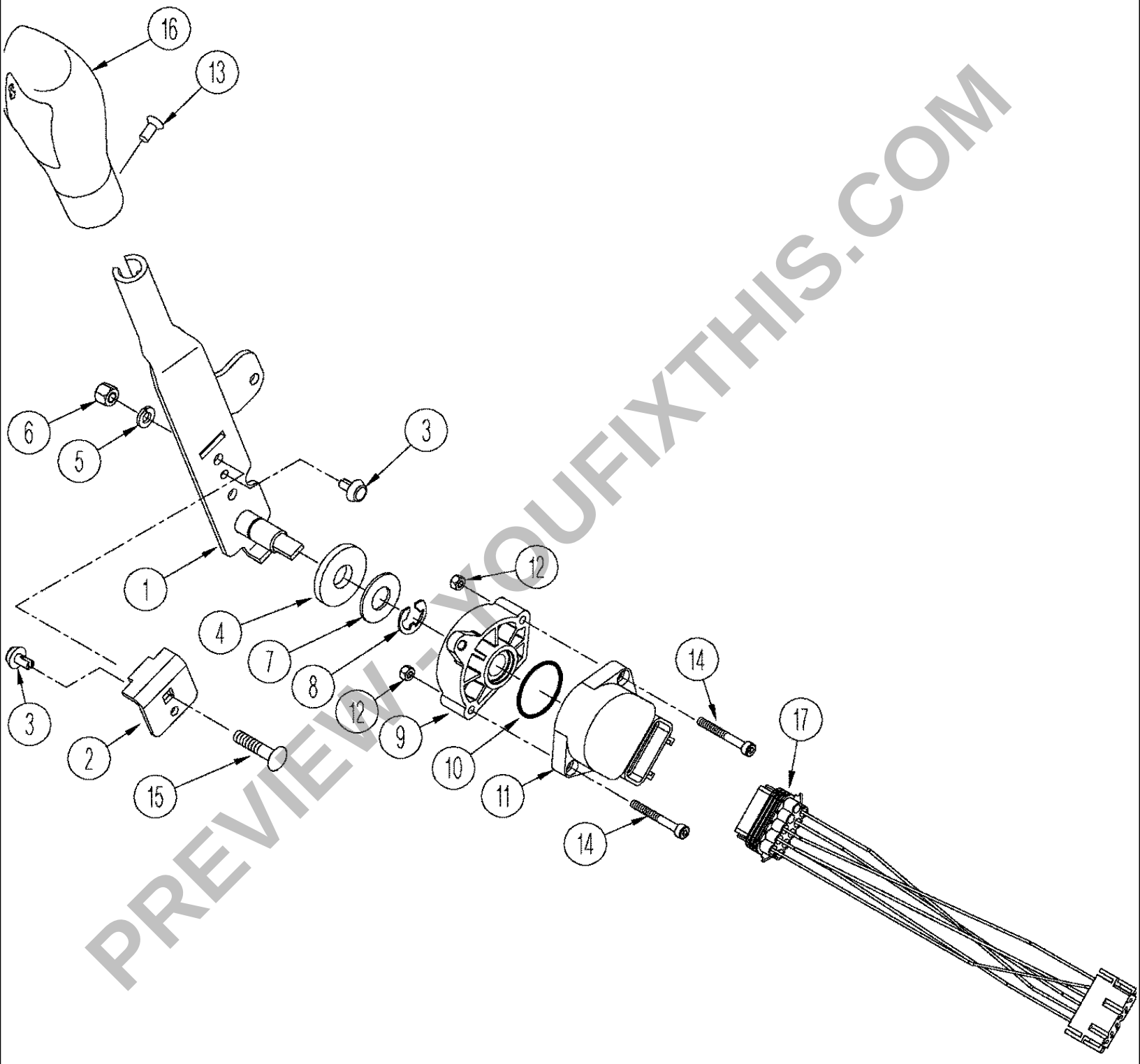

PREVIEW - YOUFIXTHIS.COM

Download full manual at youfixthis.com

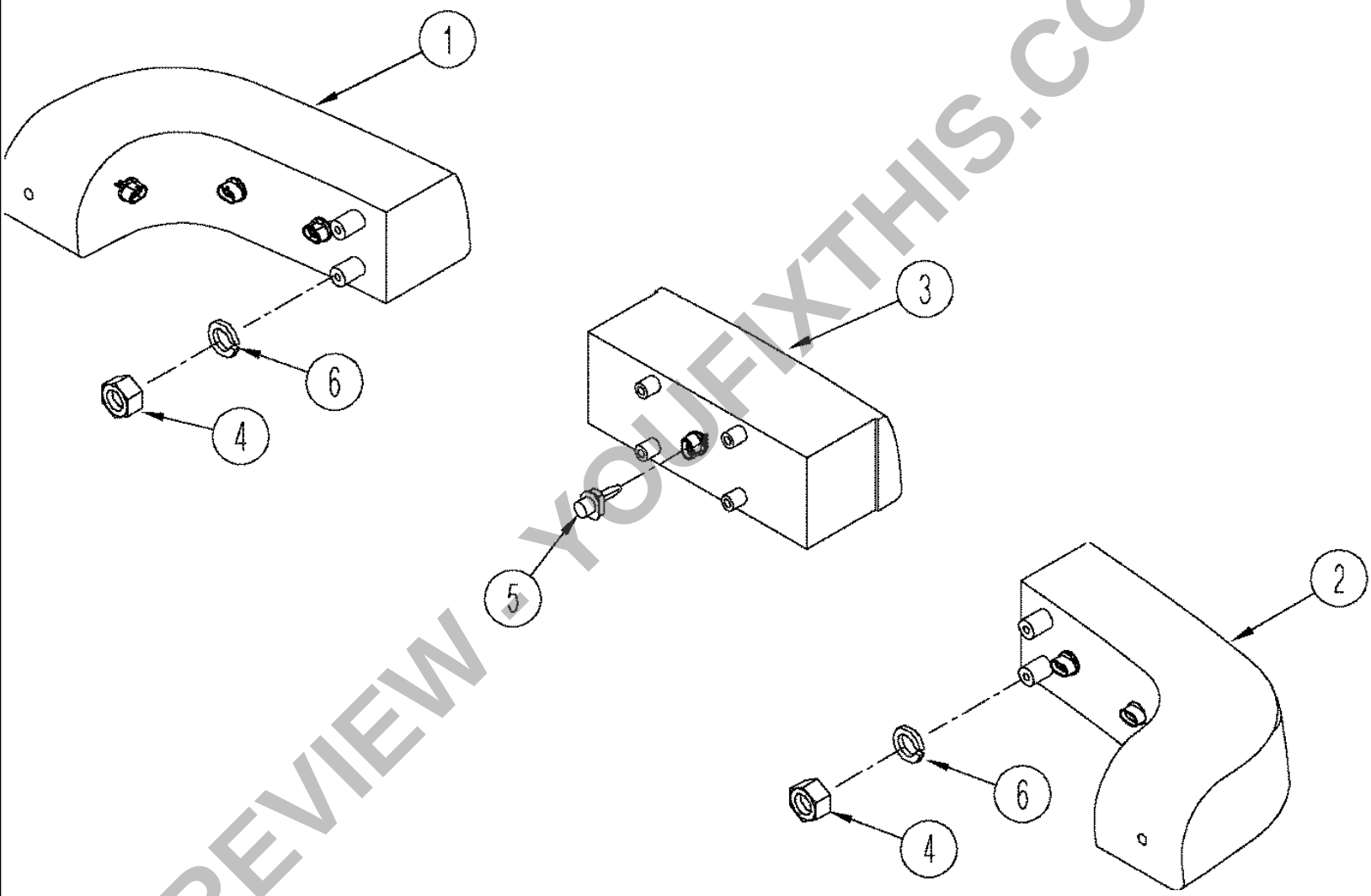

PREVIEW - YOUFIXTHIS.COM

Download full manual at youfixthis.com

TJ425 TRACTOR

04 -30 HARNESS - REAR FRAME, WITH ELECTRONIC REMOTE, WITHOUT THREE POINT HITCH

Ref	Part Number	Qty	Description
1	445144A1	1	HARNESS,
2	86624176	15	WASHER, M10
3	86500689	10	NUT, M10; 10.9
4	86639001	3	CLAMP, 1 ID
5	481849C1	1	COVER,
6	86624184	10	WASHER, 9 x 17 x 1,6 mm
7	43140	6	SCREW, Cap, HH, CL 8.8, M10 x 1.5 x 30
8	86010402	2	CLAMP, 1/2" x 3/8" Bolt
9	43362	9	NUT, CL 10, M8 x 1.25
10	367959A2	1	SENDER UNIT, Fuel Level, Includes : 11
11	104812C3	1	GASKET, Mounting
12	86585709	5	SCREW, M5 x 10
13	328265A1	3	GROMMET,
14	86624181	1	WASHER, 6,6 x 12 x 1,6 mm
15	120100	4	SCREW, Cap, HH, CL 8.8, M6 x 1 x 20
16	121645C1	1	SOCKET/RECEPTACLE,
17	86632602	1	WASHER, Lock, M10
18	80681	2	WASHER, LOCK, 5/16"
19	43234	2	SCREW, Cap, HH, CL 10.9, M8 x 1.25 x 25
20	86639010	1	CLAMP, 3/4 ID
21	140028	1	WASHER, Lock, M10
22	86977726	1	SCREW, Cap, HH, CL 8.8, M6 x 1 x 12
23	435437A1	1	STRAP, 7 in, Cable
24	392227A1	1	HARNESS, Differential Lock
25	440567A1	1	STRAP, CABLE, 508 mm (20 in)
25	435437A1	2	STRAP, Tie, 184 mm (7-1/4 in)
26	245483C1	4	CONNECTOR, HYD., , Without Field Lights
27	225127C1	8	TERMINAL CONNECTOR, Type V4

PREVIEW - YOUFIXTHIS.COM

Download full manual at youfixthis.com

TJ425 TRACTOR

06 -02[1] TRANSMISSION SHIFT CONTROLS, MANUAL SHIFT TRANSMISSION

Ref	Part Number	Qty	Description
1	387641A1	1	SHIFTING UNIT, Box, See Figure : 06-02 (2)
	387647A1	1	SHIFTING UNIT, Bell, Consists Of : 2-18
2	396435A2	1	SUPPORT,
3	396444A1	1	CRANK, Linkage Pivot
4	396445A1	1	CRANK, Linkage Pivot
5	396446A1	1	CRANK, Linkage Pivot
6	396447A1	1	CRANK, Linkage Pivot
7	402749A1	8	BALL JOINT,
8	431198A1	4	ROD,
9	9515003	4	BOLT, Cap, HH, CL 10.9, M10 x 1.5 x 30
10	403749A1	4	NUT, Lock, M10; 8
11	431052A1	6	BUSHING,
12	398870A1	2	BUSHING,
13	86500689	4	NUT, M10; 10
14	412355A1	1	BOOT,
15	430415A1	1	PIN, LARGE,
16	430546A1	1	SPACER,
17	86624182	1	WASHER, M6
18	86505530	1	SCREW, M6 x 20; 10.9
	431209A1	1	ROD, Consists Of : 19, 24-26
	431210A1	1	ROD, Consists Of : 20, 24-26
	431211A1	1	ROD, Consists Of : 21, 24-26
	431213A1	1	ROD, Consists Of : 22, 24-26
	431212A1	1	ROD, Consists Of : 23, 24-26
19	NSS	1	NOT SERVICED SEPARATELY, Rod, 487 mm (19 in)
20	NSS	1	NOT SERVICED SEPARATELY, Rod, 806 mm (32 in)
21	NSS	1	NOT SERVICED SEPARATELY, Rod, 789 mm (31 in)
22	NSS	1	NOT SERVICED SEPARATELY, Rod, 638 mm (25 in)
23	NSS	1	NOT SERVICED SEPARATELY, Rod, 594 mm (23 in)
24	NSS	1	NOT SERVICED SEPARATELY, Nut, M10; 10
25	402749A1	1	BALL JOINT, Right Hand
26	404639A1	1	BALL JOINT, Left Hand
27	86624978	9	SCREW, M10 x 35; 10.9
28	403749A1	13	NUT, Lock, M10; 8
29	86624978	4	SCREW, M10 x 35; 10.9
30	86625263	5	WASHER, 9 x 20 x 1,6mm
31	43235	5	SCREW, Cap, HH, CL 10.9, M8 x 1.25 x 30
32	408566A1	3	INSERT, Threaded
33	86624182	2	WASHER, M6
34	120100	2	SCREW, Cap, HH, CL 8.8, M6 x 1 x 20
35	404287A1	1	INSERT, THREADED,

PREVIEW - YOUFIXTHIS.COM

Download full manual at youfixthis.com

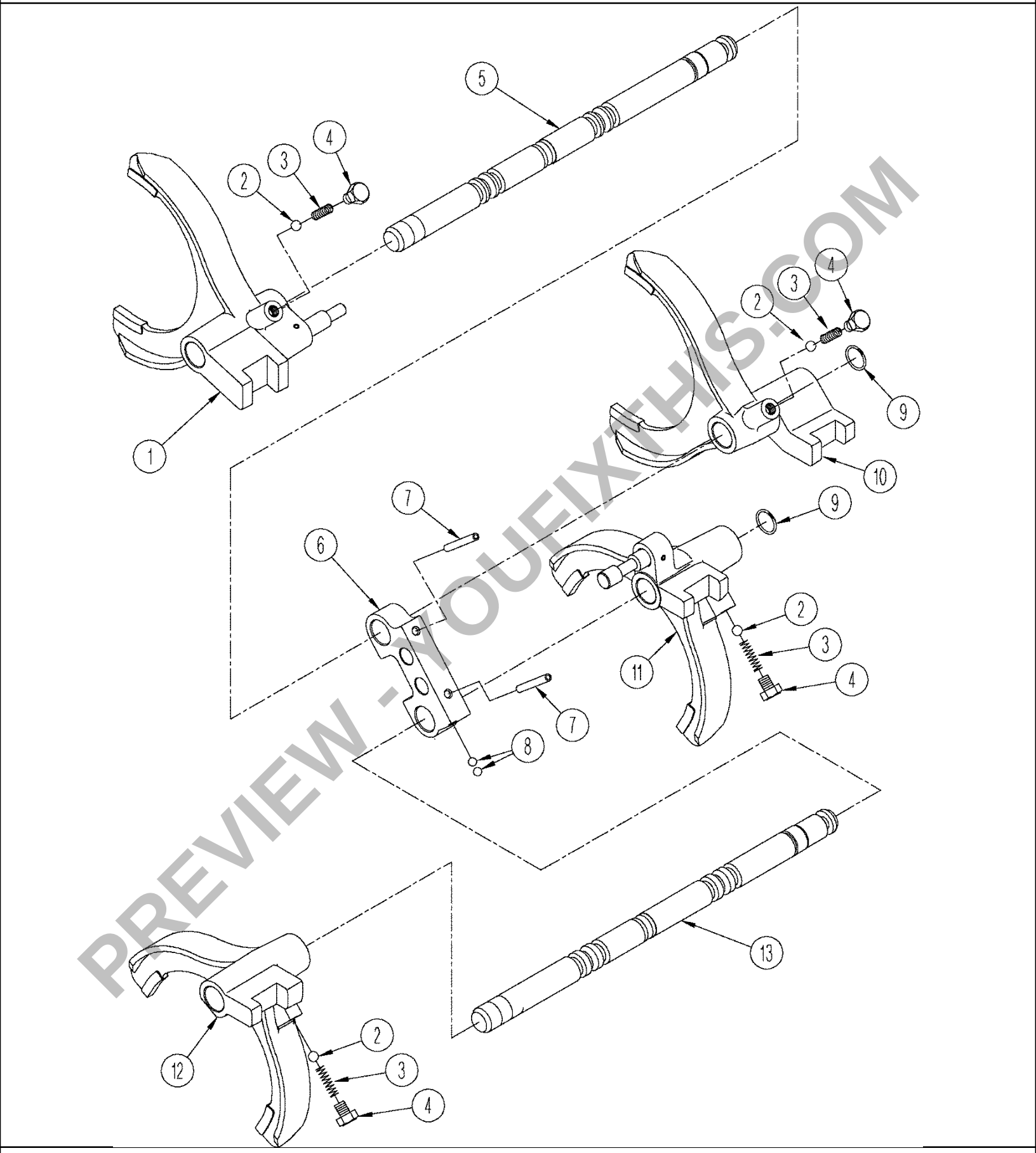

PREVIEW - YOUFIXTHIS.COM

Download full manual at youfixthis.com

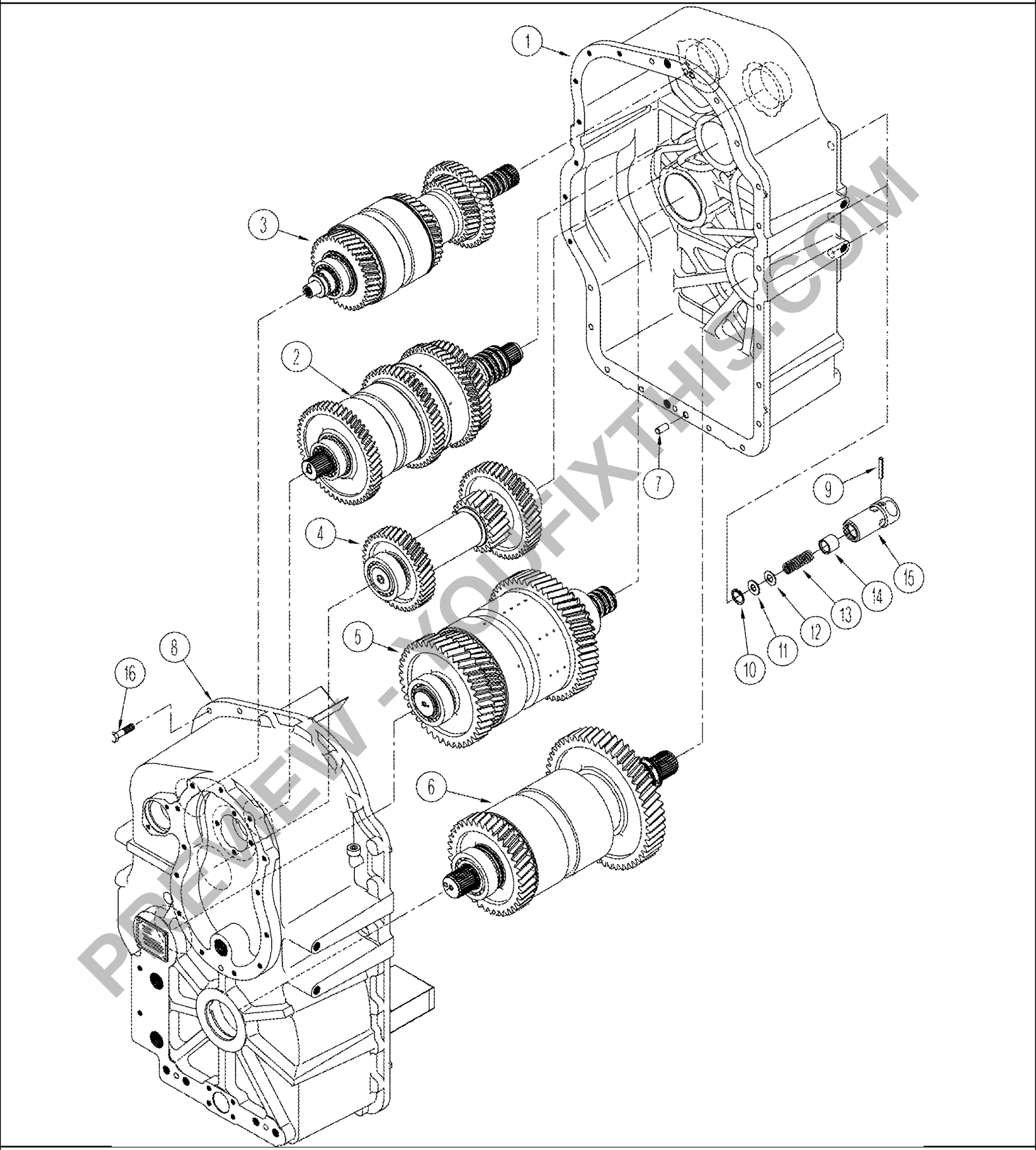

PREVIEW - YOUFIXTHIS.COM

Download full manual at youfixthis.com

Ref	Part Number	Qty	Description
19	451767A1	1	BEARING, Support, Pillow Block

PREVIEW - YOUFIXTHIS.COM

Download full manual at youfixthis.com

TJ425 TRACTOR

06 -50 AXLE ASSY - BRAKE AND RIGH-HAND CARRIER (TJ375, TJ425 MANUAL SHIFT)

Ref	Part Number	Qty	Description
	398362A1	1	CARRIER ASSY., Brake, Consists Of : 1, 2
1	NSS	1	NOT SERVICED SEPARATELY, Carrier
2	NSS	1	NOT SERVICED SEPARATELY, Plug, Expansion, 12 mm
3	139059C1	1	SEAL,
4	86639323	18	WASHER, 17.5 x 30 x 4 mm
5	9840670	15	SCREW, M16 x 180; 10.9
6	178565A2	1	PISTON, Service Brake
7	228194A3	1	RING, BACK-UP, Return
8	353363A1	3	PLATE, BRAKE, Friction
9	228193A1	3	PLATE, LARGE, Separator
10	226252A2	1	PLATE,THRUST, Backing
11	226318A2	1	PISTON, Park Brake
12	226254A4	1	BACK-UP RING, Retaining
13	226320A1	1	SPRING,
14	86639321	12	WASHER, 13,5 x 24 x 3 mm
15	412085	2	SCREW, Cap, HH, CL 10.9, M12 x 1.75 x 80
16	412605	10	SCREW, Cap, HH, CL 10.9, M12 x 1.75 x 90
17	388308A1	2	SEAL, Ring
	235507A5	3	ADAPTER, Includes : 18 - 20
18	86637801	1	PIN, LARGE, Dowel, 1/2 X 2
19	86637643	6	CIRCLIP, Snap, No. 50
20	1342928C1	9	WASHER, Thrust
21	86637768	1	O-RING, 1/8 ID x 18; 5
22	86637771	1	O-RING, 1/8 ID x 11-1/2; 7
23	86637775	1	O-RING, 1/8 ID x 16; 7
24	86637772	1	O-RING, 1/8 ID x 12; 7
25	A63171	1	BEARING, CUP,
25	622336C1	1	BEARING, CONE,
26	178553A1	AR	SHIM, 0,076 mm
26	178554A1	AR	SHIM, 0,101 mm
26	178555A1	AR	SHIM, 0,130 mm
26	198843A1	AR	SHIM, 0,508 mm
27	310692A1	1	SHAFTED PINION, Sun Gear, Long
28	390873A1	3	BOLT, SPECIAL,
29	388308A1	1	SEAL, Not Illustrated

PREVIEW - YOUFIXTHIS.COM

Download full manual at youfixthis.com

Ref	Part Number	Qty	Description
42	H434163	1	CAP, Dust
43	NSS	1	NOT SERVICED SEPARATELY, Fitting, Diagnostic, Includes : 44
44	86639042	1	GASKET, 11.3 ID x 2.2 W
45	86639081	1	TEE, 1 fc sl, Includes : 53
46	9992069	3	O-RING, 90 Duro, .614" ID x .070" Thk
47	9992298	4	O-RING, 90 Duro, .489" ID x .070" Thk
48	86639323	1	WASHER, 17.5 x 30 x 4 mm
49	86639058	2	TEE, M22 or x 13/16 fc sl, inc. 50, 51
50	86639044	2	O-RING, 19,2 ID x 2,2 mm
51	9992298	4	O-RING, 90 Duro, .489" ID x .070" Thk
52	416282A1	1	HOSE ASSY.,
	341195A1	2	ORIFICE, Consists Of : 53 - 56
53	86579674	2	CONNECTOR, HYD., M14 orb x 13/16 fc sl, Inc. 54, 57
54	86639042	2	GASKET, 11.3 ID x 2.2 W
55	9992298	2	O-RING, 90 Duro, .489" ID x .070" Thk
56	NSS	1	NOT SERVICED SEPARATELY, Orifice, M8 x 12
57	384977A1	2	VALVE, Solenoid, Differential Lock, See Figure(s) : 08-51
58	416276A1	1	TUBE ASSY.,

PREVIEW - YOUFIXTHIS.COM

Download full manual at youfixthis.com

TJ425 TRACTOR

08 -08[01] AXLE HYDRAULICS - LUBRICATION CIRCUIT (TJ375, TJ425 MANUAL SHIFT), ASN RVS001801

Ref	Part Number	Qty	Description
1	86579678	2	FITTING, 13/16 fc sl x 22 or, Includes : 2, 3
2	9992298	11	O-RING, 90 Duro, .489" ID x .070" Thk
3	86639044	1	O-RING, 19.3 ID x 2.2 mm
4	390659A2	1	HOSE ASSY., 2178 mm (86 in)
5	418813A1	1	HOSE, 2464 mm (97 in)
6	43234	2	SCREW, Cap, HH, CL 10.9, M8 x 1.25 x 25
7	9993141	2	O-RING, 90 Duro, .364" ID x .070" Thk
8	86639083	3	NUT, 13/16 in
9	507586	6	CLAMP, No. 20
10	337545A1	2	CONNECTOR, HYD., Axle Drain
11	404991A1	1	HOSE,LARGE, 38, Cut From : S118383
12	416280A1	1	TUBE ASSY.,
13	340972A1	1	HOSE ASSY., 787 mm (31 in), Cut From : 443082A1
14	416727A1	1	TUBE ASSY.,
15	449803A1	1	HOSE ASSY., 970 mm (38 in)
16	411104A1	1	VALVE, HYDRAULIC, Regulator, See Figure(s) : 08-22
17	86579675	1	CONNECTOR, HYD., 13/16 fc sl x M16 Or, Includes : 18, 19
18	9992298	1	O-RING, 90 Duro, .489" ID x .070" Thk
19	86642449	1	O-RING, 13.3 ID x 2.2
20	413338A1	1	TUBE ASSY.,
21	449800A1	1	TUBE ASSY.,
22	86579676	1	CONNECTOR, HYD., 13/16 fc sl x 18 Or, Includes : 23, 24
23	9992298	1	O-RING, 90 Duro, .489" ID x .070" Thk
24	86639043	1	O-RING, 15.3 ID x 2.2
25	449802A2	1	TUBE ASSY.,
26	9992307	4	ELBOW, 90, 1/2 or x fc sl, Inc. 2, 27
27	86642448	4	O-RING, 9,3 ID x 2,2 Thk
28	86639061	2	CONNECTOR, HYD., 13/16 fc sl x blkhd, Includes : 29
29	9992298	2	O-RING, 90 Duro, .489" ID x .070" Thk
30	S120426	1	HOSE,PROTECTION, 24"
31	L18337	2	STRAP, 15 in
32	86637979	1	CLAMP,
33	449813A2	1	TUBE ASSY.,
33	449813A2	1	TUBE ASSY., 19.3 ID x 2.2 mm
34	449815A2	2	TUBE ASSY.,
35	358968A1	1	COUPLING, M18 orb x 1,5, Diagnostic, Includes : 36
36	86639043	1	O-RING, 15.3 ID x 2.2
37	86639044	1	O-RING, 19.3 ID x 2.2 mm
38	392690A1	1	COUPLING,
39	399032A1	1	PLUG,
40	435457A1	2	HOSE, 102 mm (4 in), Cut From : 443082A1

ASN RVS001801

PREVIEW - YOUFIXTHIS.COM

Download full manual at youfixthis.com

TJ425 TRACTOR

08 -25 LINKAGE HYDRAULIC REMOTE CONTROL

Ref	Part Number	Qty	Description
1	359789A2	1	SUPPORT ASSY., Bracket, RH
2	359783A2	1	SUPPORT ASSY., Bracket, LH
3	367538A1	2	ARM ASSY., LH
4	367545A1	2	ARM ASSY., RH
5	L53928	4	BALL JOINT,
6	86625251	8	WASHER, 11 x 18 x 1.6 mm
7	359804A1	2	PIN,
8	A67295	4	PLUG,
9	349340A1	4	LINK,CONNECTING,
10	417564A1	2	COVER,
11	86500688	4	NUT, CL 10, M6 x 1
12	86508568	8	SCREW, Cap, HH, CL 8.8, M6 x 1 x 16
13	86624181	20	WASHER, 6.6 x 12 x 1.6 mm
14	359791A1	1	BRACKET, , With Flow Control
15	435473A1	1	RETAINER,
16	86639304	1	SCREW, M4 x 6
17	A160814	3	KNOB, Flow Control
18	86977726	8	SCREW, Cap, HH, CL 8.8, M6 x 1 x 12
19	86639038	4	BOLT, M6 x 25; 10.9
20	363508A1	1	CABLE ASSY., Flow Control
21	86637943	3	SCREW, Set, 5/8

PREVIEW - YOUFIXTHIS.COM

Download full manual at youfixthis.com

08 -38 MANIFOLD VALVE ASSY

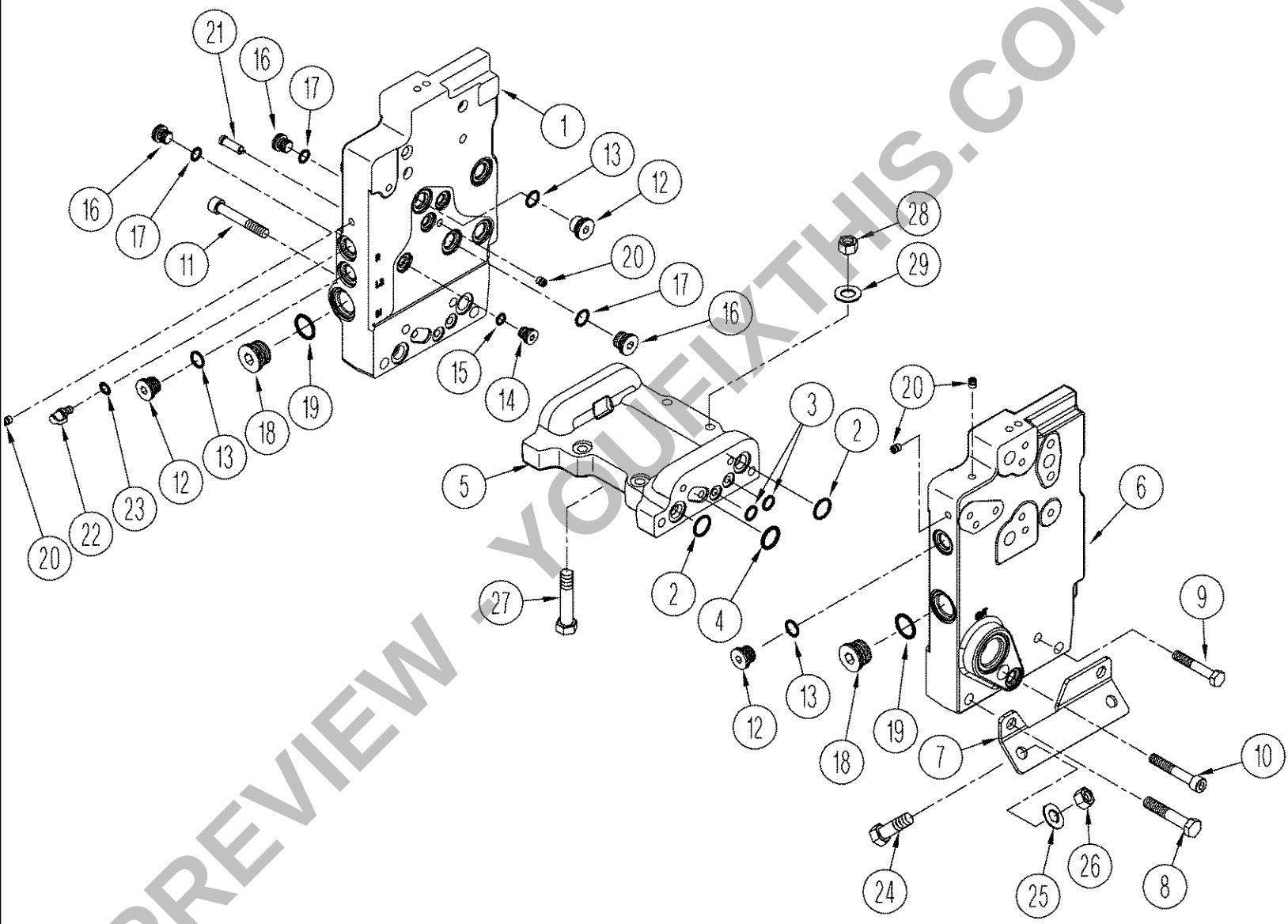

PREVIEW - YOUFIXTHIS.COM

Download full manual at youfixthis.com

08 -52 HYDRAULICS - FAN DRIVE CIRCUITRY (TJ425, TJ450)

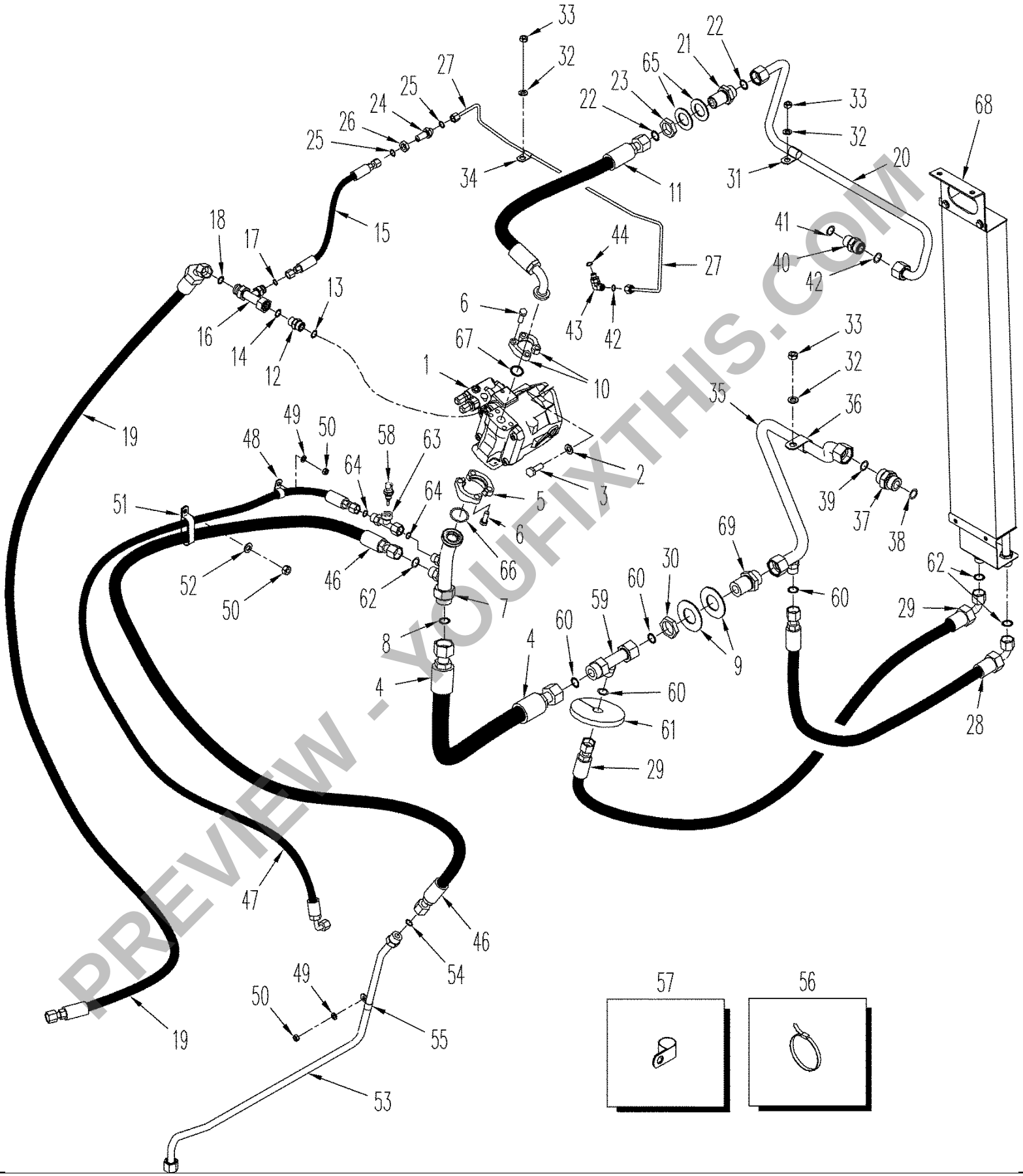

PREVIEW - YOUFIXTHIS.COM

Download full manual at youfixthis.com

TJ425 TRACTOR

09 -04 LINK ASSY - UPPER

Ref	Part Number	Qty	Description
1	403726A1	1	3 POINT HITCH,
2	403731A1	1	LINK, U-Joint
3	435504A1	2	PIN,
4	435501A1	2	SPACER,
5	86625266	2	WASHER, 17.5 x 30 x 4 mm
6	86529976	2	SCREW, M6 x 35; 10.9
7	86639255	2	PIN,ROLL, M6 x 55
8	403729A1	1	TURNBUCKLE,
9	403730A1	1	LOCK,
10	295004A1	4	PLUG,
11	282523A1	1	LOCK, Anti-Rotation
12	86624184	2	WASHER, 9 x 17 x 1.6 mm
13	43231	2	BOLT, M8 x 12; 10.9
14	403728A1	1	3 POINT HITCH,
15	403733A1	1	LINK, U-Joint
16	87414	6	NIPPLE, LUBE, Straight, 1/4"-28

PREVIEW - YOUFIXTHIS.COM

Download full manual at youfixthis.com

09 -21 CONSOLE, RIGHT-HAND ARMREST

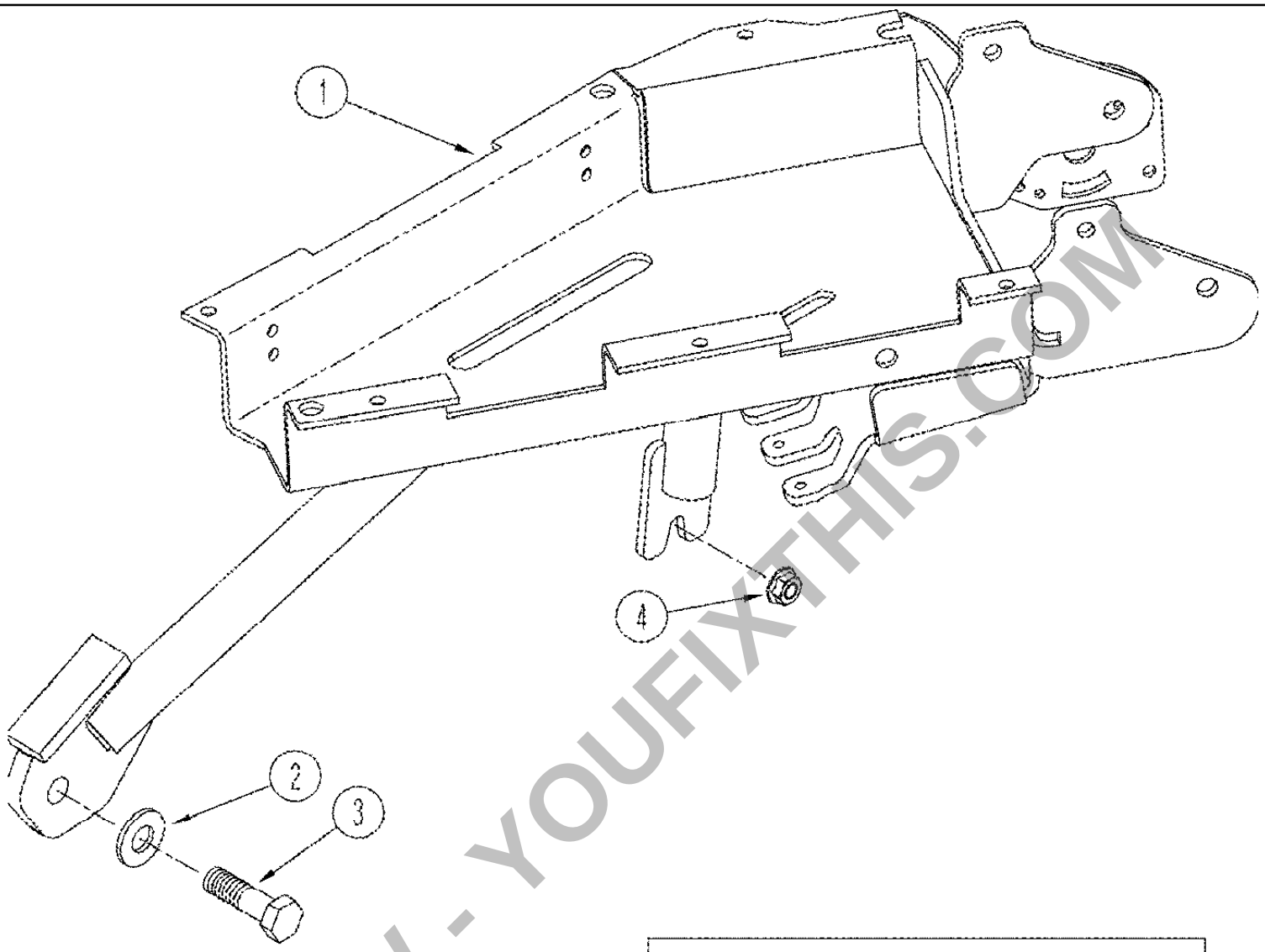

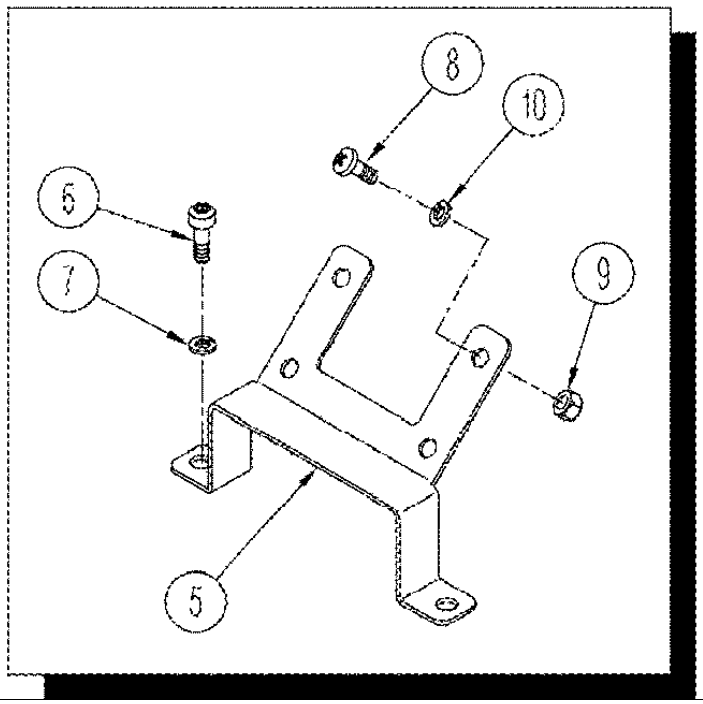

PREVIEW - YOUFIXTHIS.COM

Download full manual at youfixthis.com

TJ425 TRACTOR

09 -40 HOOD AND SUPPORT

Ref	Part Number	Qty	Description
1	410587A1	1	HOOD, Engine
2	401330A1	1	SUPPORT,
3	412685	1	PIN,SPLIT (COTTER), M4 x 32
4	86639104	1	PIN, LARGE, 11/16 x 100
5	86639031	2	BOLT, M12 x 45; 10.9
6	337475	2	NUT, CL 10, M12 x 1.75
7	86625255	12	WASHER, 13,5 x 24 x 3 mm
8	339543A2	1	ARM, Lift, See Figure(s) : 09-42
9	352811A2	1	PLATE, Hood Latch, BSN RVS001406
9	445932A1	1	PLATE, Hood Latch, ASN RVS001406
10	86639105	1	PIN, LARGE, Clevis, 6 x 20 mm
11	86624182	4	WASHER, M6
12	314842A3	4	BEARING,
13	86639188	4	SCREW, M6 x 40; 10.9
14	86624181	4	WASHER, 6,6 x 12 x 1,6 mm
15	86514335	4	NUT, LOCK, CL 10, M6 x 1
16	443297A1	1	CABLE ASSY., , Also Order 445932A1 Hood Latch Mounting Plate For BSN RVS001406
17	318159A1	1	LATCH,
18	339534A4	1	SUPPORT, Radiator, LH
19	339537A4	1	SUPPORT, Radiator, RH
20	337563	10	SCREW, Cap, HH, CL 10.9, M12 x 1.75 x 40
21	86639114	1	PIN,SPLIT (COTTER), 1,6 x 10 mm
22	349565A1	1	GUIDE, Hood Sight
23	86625060	2	NUT, 1/4
24	86639038	4	BOLT, M6 x 25; 10.9
25	435437A1	2	STRAP, 7 in
26	440891A1	1	SEAL, Foam
27	392428A2	1	COVER, Fan, LH
28	392434A2	1	COVER, Fan, RH
29	399576A1	6	WASHER, SPECIAL,
30	9515003	4	BOLT, Cap, HH, CL 10.9, M10 x 1.5 x 30
31	86500689	2	NUT, M10; 10
	86983416	1	KIT, FIP, Threaded Insert, 6mm, Includes : 32, 33
32	NSS	1	NOT SERVICED SEPARATELY, Screw
33	NSS	1	NOT SERVICED SEPARATELY, Insert, Expandable

PREVIEW - YOUFIXTHIS.COM

Download full manual at youfixthis.com

TJ425 TRACTOR

09 -54 TOW CABLE

Ref	Part Number	Qty	Description
1	369837A1	1	SHACKLE,
2	86637794	1	BOLT, 1-1/2 x 10; 8
3	86637798	1	NUT,
4	408793A1	1	PLATE,
5	409753A1	1	LINK,
6	369838A1	1	SHACKLE,
7	86625260	4	WASHER, 22 x 37 x 4 mm
8	9843612	4	SCREW, Cap, HH, CL 10.9, M20 x 2.5 x 100
9	379523A1	1	HARNESS, WIRE,
10	408795A1	1	HOOK, Side
11	435501A1	1	SPACER,
12	408796A1	1	LATCH, Side Hook
13	86639326	7	WASHER, 17,5 x 34 x 5 mm
14	374835	1	SCREW, Cap, HH, CL 10.9, M16 x 2 x 40
15	86639102	1	SPLIT PIN/SAFETY PIN, Clevis, 12 x 40 mm
16	435425A1	1	PIN, 1/8
17	385380A1	1	PLATE ASSY.,
18	9847468	3	SCREW, M16 x 70; 10.9
19	409751A1	4	SPACER, M20 x 40, TJ375, TJ425 Manual Shift Transmission
20	719546003	1	KIT, SERVICE, Tow Cable, Includes : 1 - 19

PREVIEW - YOUFIXTHIS.COM

Download full manual at youfixthis.com

PREVIEW ONLY

You're viewing 25 of 602 pages

The full manual includes:

- All 602 pages, complete
- Searchable PDF (find any keyword)
- No watermarks
- Instant download
- Print-ready quality

GET FULL MANUAL NOW

New Holland TJ425 Parts Catalog

Scan or click anywhere
youfixthis.com

Click anywhere on this page to get the full manual