3.2 DIMENSIONS AND PERFORMANCE WITH BUCKET

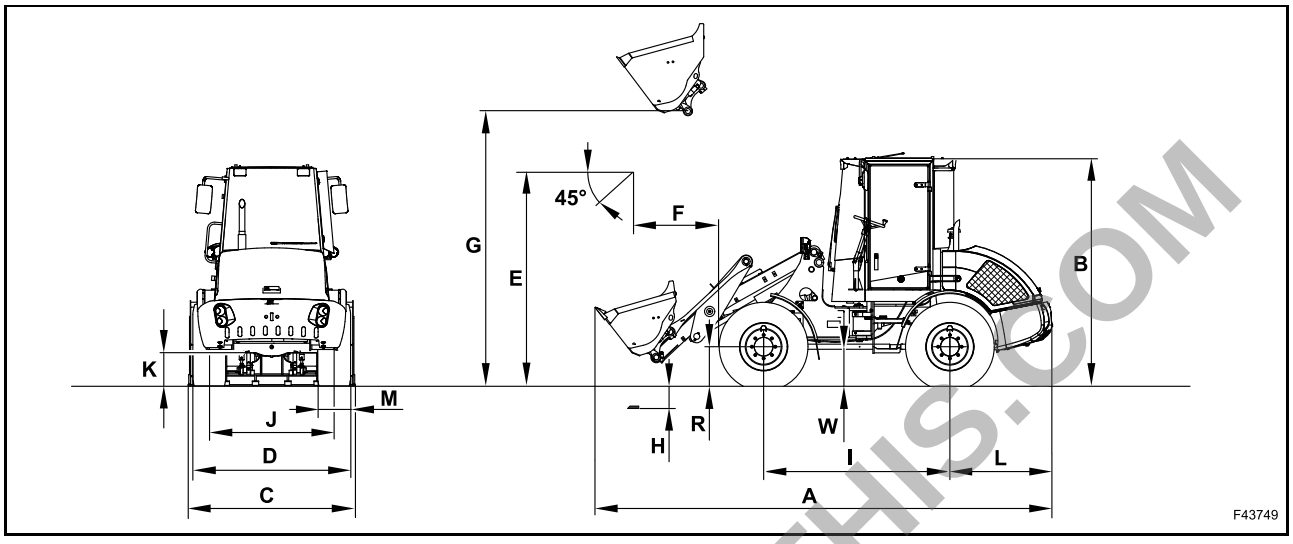

BUCKET - DIMENSIONS			W50BTC	W60BTC	W70BTC	W80BTC
A	Total length	mm (in)	5360 (211.02)	5490 (216.14)	5590 (220.07)	5650 (222.44)
B	Cab height	mm (in)	2710 (107.70)	2790 (109.84)	2790 (109.84)	2790 (109.84)
C	Bucket width	mm (in)	1900 (74.80)	2050 (80.70)	2100 (88.70)	2100 (82.70)
D	Wheel width	mm (in)	1841 (72.48)	1910 (75.19)	1910 (75.19)	1954 (76.92)
E	Dumping height	mm (in)	2525 (99.40)	2550 (100.39)	2570 (101.18)	2616 (102.99)
F	Dumping reach	mm (in)	825 (32.50)	785 (30.90)	845 (33.26)	890 (35.03)
G	Maximum height of bucket pin	mm (in)	3240 (127.55)	3267 (128.62)	3360 (132.28)	3440 (135.43)
H	Dumping depth	mm (in)	93 (3.66)	96 (3.77)	107 (4.21)	106 (4.17)
I	Wheel base	mm (in)	2182 (85.90)	2250 (88.60)	2350 (92.51)	2350 (92.51)
J	Track	mm (in)	1480 (58.26)	1526 (60.07)	1526 (60.07)	1570 (61.81)
K	Clearance from ground to axle	mm (in)	330 (13)	330 (13)	330 (13)	330 (13)
L	Rear overhang	mm (in)	1203 (47.36)	1267 (49.88)	1267 (49.88)	1267 (49.88)
M	Tyre width (*)	mm (in)	361 (14.21)	384 (15.11)	384 (15.11)	384 (15.11)
R	Tyre radius (*)	mm (in)	483 (19.01)	508 (19.99)	508 (19.99)	508 (19.99)
W	Clearance from ground to drive shaft	mm (in)	400 (15.74)	415 (16.33)	415 (16.33)	415 (16.33)
Operating weight (with standard bucket)		kg (lb)	4615 (10153)	4920 (10824)	5430 (11946)	5770 (12695)

(*) these dimensions apply when considering 12.5-20 tyres for W50BTC and 14.5-20 tyres for W60BTC - W70BTC - W80BTC

BUCKET - PERFORMANCE		W50BTC	W60BTC	W70BTC	W80BTC
Standard bucket capacity	m^3 (ft^3)	0.7 (24.7)	0.8 (28.2)	1 (35.3)	1.1 (38.8)
Tensile force	kg (lb)	3800 (8360)	4550 (10010)	4410 (10010)	5100 (11220)
Dumping load - ISO axis	kg (lb)	3345 (7359)	3495 (7689)	4245 (9339)	4420 (9724)
Dumping load - turned by 40° ISO	kg (lb)	2945 (6500)	3100 (6820)	3630 (7986)	3755 (8261)
Bucket width	mm (in)	1900 (74.80)	2050 (80.70)	2100 (88.70)	2100 (88.70)
Lifting capacity at ground	mm (in)	4260 (167.71)	5520 (217.32)	4410 (173.62)	6060 (238.58)

PREVIEW - YOUFIXTHIS.COM

Download full manual at youfixthis.com

REMOVAL

Move the machine to a level and firm ground, away from any soft ground, excavations or poorly shored cavity.
Rest the bucket on the ground.
Place the direction-of-travel lever and gearshift lever in neutral position.
Immobilize the machine by means of the parking brake.
Stop the engine and remove the starter switch key.
Release the hydraulic pressure by operating the control levers in all directions.
Remove the cups (8) and unscrew nuts (7) from both sides.
Remove the two wheels (9).
Disconnect the cardan joint (10).
Position the fork-lift truck laterally with the forks under front axle (1), lift the front axle and support it.
Release the tie-rod (6) from the brake disc.
Disconnect the pipes (11, 12) of the multi-plate brake (W60BTC, W70B, W80B).
Unscrew and remove the nuts (4) and (5).
Remove the screws (3) and the plates (2).
Lower the forks and remove the front axle (1).

INSTALLATION

The assembly of the front axle is to be carried out in the reverse order.
Tighten the nuts (4) and (5) to the prescribed torque 350 Nm (258.14 lbf·ft) and the wheel nuts (7) to the prescribed torque 500 Nm (368.78 lbf·ft).
Fill oil in the hubs and in the axle reduction gears (see Operator's manual).
Bleed air from the multi-plate brake (W60BTC, W70BTC, W80BTC).
Adjust the parking brake.

PREVIEW - YOUFIXTHIS.COM

Download full manual at youfixthis.com

1. BRAKE SYSTEM DIAGRAM

1.1 STANDARD DIAGRAM (W50BTC)

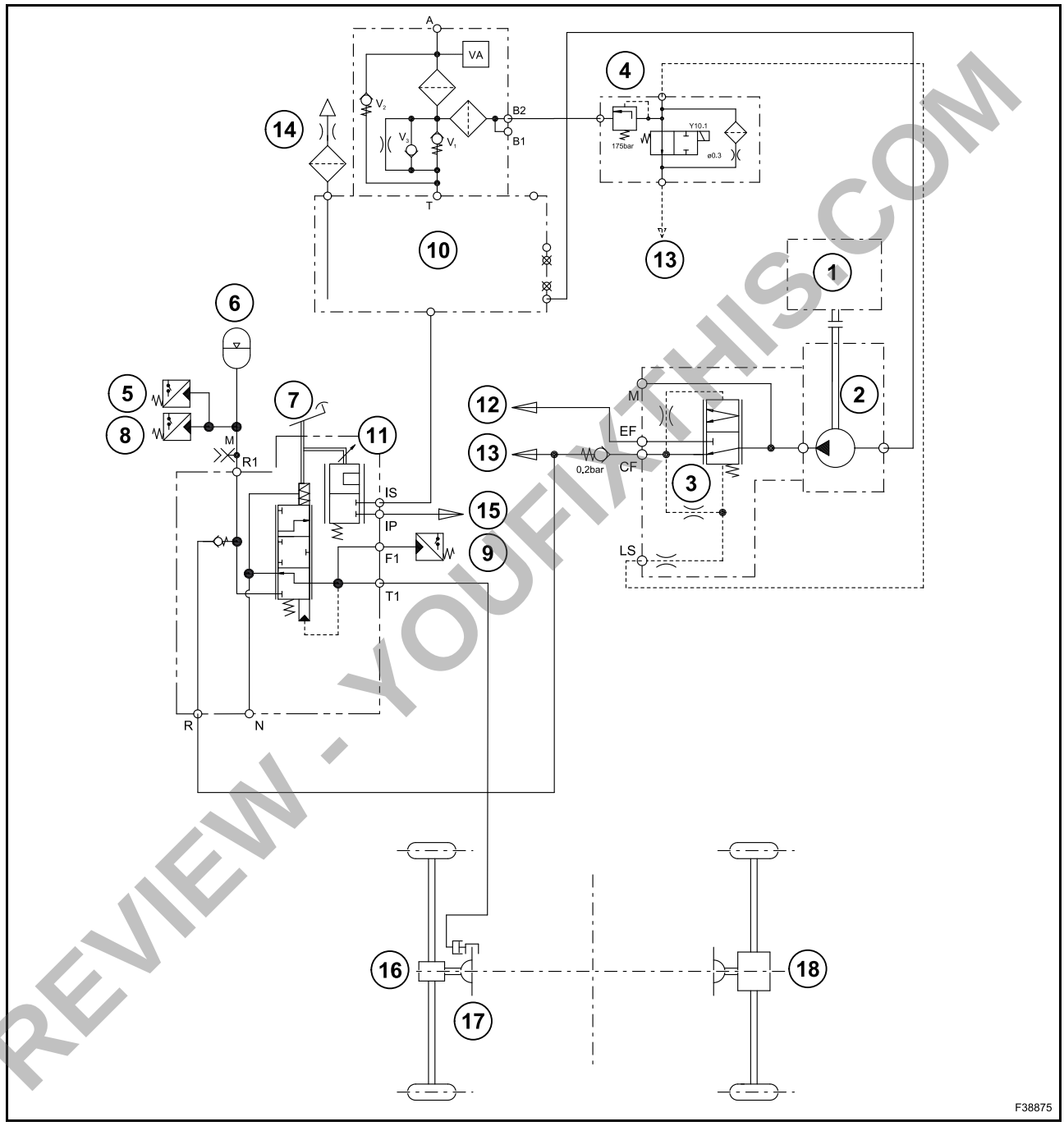

1. Diesel engine
2. Gear pump
3. Priority valve
4. Accumulator charging valve
5. Accumulator charge pressure switch
6. Accumulator
7. Brake valve
8. Braking alarm pressure switch
9. Brake light pressure switch
10. Oil tank
11. “Inching” valve
12. To the working hydraulic system
13. To the steering valve and brake valve
14. Oil tank breather valve
15. To the variable-displacement pump
16. Front axle
17. Brake disc
18. Rear axle

PREVIEW - YOUFIXTHIS.COM

Download full manual at youfixthis.com

EMERGENCY STEERING AND “RIDE CONTROL”

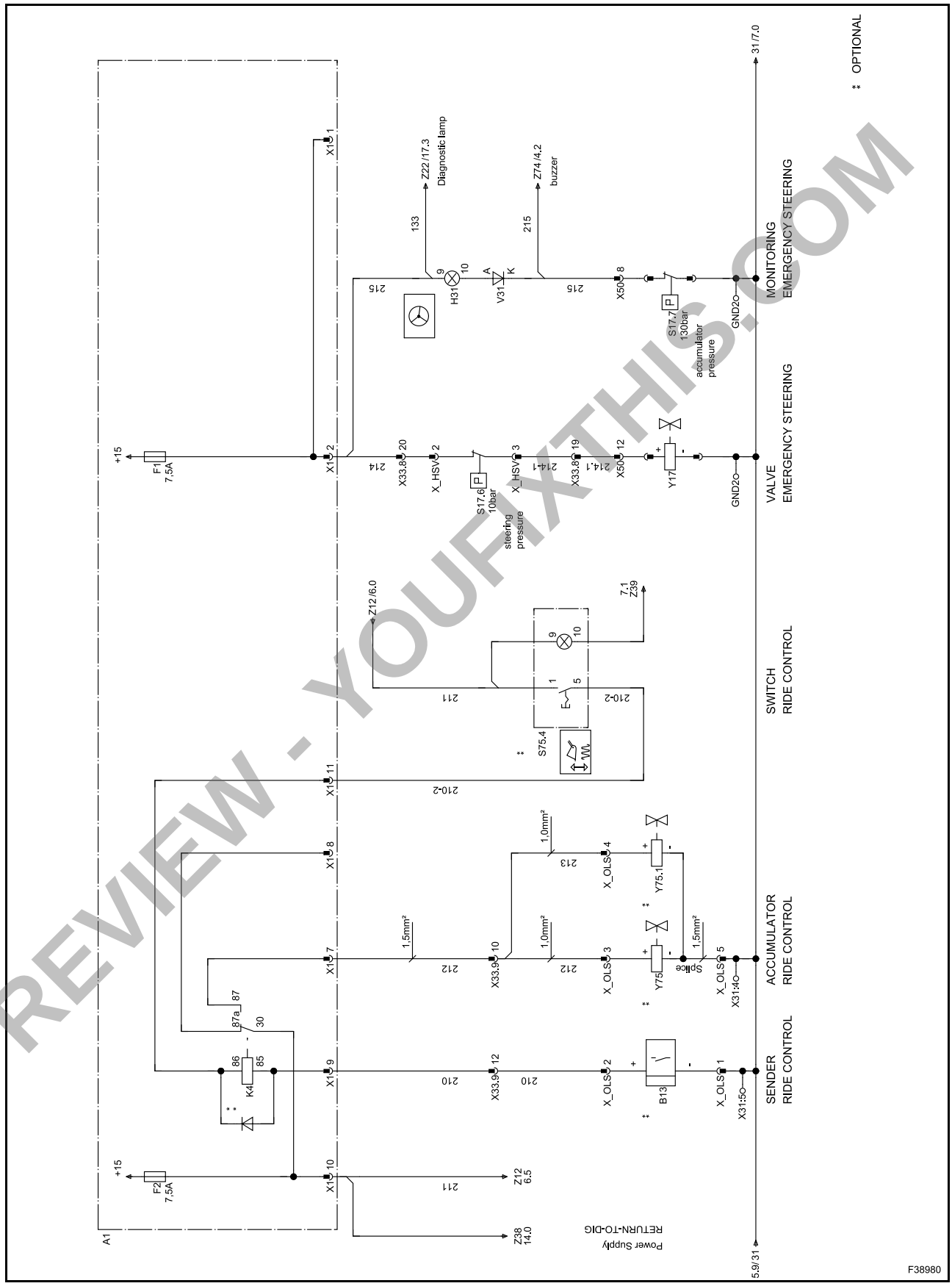

PREVIEW - YOUFIXTHIS.COM

Download full manual at youfixthis.com

6. TROUBLESHOOTING

PROBLEMS	CAUSE										
	1	2	3	4	5	6	7	8	9	10	11
Wheel vibration; front tyre resistance; half shaft breakage.	●	●	●		●						●
Steering is difficult; the vehicle goes straight while it is turning.	●	●	●	●							●
No differential action; jams during steering.	●			●	●						●
Excessive noise of transmission.	●	●	●	●	●		●		●		●
Uneven wear of tyre.	●	●	●	●	●	●	●				●
Friction noise.	●			●	●			●	●	●	●
Vibration during forward run, intermittent noise.	●	●	●		●						●

1. Incorrect installation or defective axle
Correct the installation or repair or replace the differential in case it does not survive any one of the test phases.

2. Overload or incorrect weight distribution
Remove excessive weight and redistribute load, following instructions related to the vehicle.

3. Different rotation radius of the tyres
If one tyre has a smaller radius, it will cause partial wheel slipping when force is applied. The other tyre with bigger radius will have to support all the work. Replace the tyre or adjust pressure to have same radius on both tyres.

4. Broken axle beam
It is not advisable to operate the vehicle with a broken axle beam. It is acceptable to move the vehicle (engine off unloaded) a few metres away only.

5. Bent axle beam
Replace the axle beam.

6. Blocked differential
Anomalous operation of the differential or breakage or blockage of the control device. Verify assembly and all components.
Vehicles with wide steering angle may proceed with kicks, have steering difficulty or cause pneumatic wearing at sharp turns. Reduce the steering angle to minimum and decelerate when the vehicle begins to kick.

7. Incorrect wheel adjustment
Verify group integrity and wheel side bearings. Adjusting according.

8. Spoiled or worn out axle parts
Check the conditions of ring gear, of the pinion, of the bearings, etc.
Replace whenever necessary.

9. Contamination in the axle box or incorrect assembly of parts
Look for foreign particles. Check assembly of the various parts of the axle.

10. Incorrect adjustment of bevel gear set: transmission components worn out
(transmission gears, U joints, etc.)
Replace or adjust as required.

11. Incorrect use of the product
See the vehicle producer's instructions once again.

PREVIEW - YOUFIXTHIS.COM

Download full manual at youfixthis.com

TIGHTENING TORQUES

Component	Tightening torque (Nm) (lbf·ft)
Oil pan plug	50 (36.87)
1/8 G plug (crankcase)	40 (29.50)
3/8 G plug (crankcase)	15 (11.06)
Water drain plug (crankcase)	40 (29.50)
Inspection covers	25 (18.43)
Timing gearbox cover	25 (18.43)
Timing gearbox	25 (18.43)
Flywheel case (M8)	35 (25.81)
Flywheel case (M12)	120 (88.50)
Cylinder head - 1st phase (M12)	65 (47.94)
Cylinder head - 2nd phase (M12)	90 (66.38)
Cylinder head - 3rd phase (M12)	60 (44.25)
Rocker shaft assy	25 (18.43)
Head cover	25 (18.43)
Valve adjusting nut	20 (14.75)
Suction manifold	25 (18.43)
Exhaust manifold	15 (11.06)
Heat exchanger	25 (18.43)
Drive shaft pulley	350 (258.14)
Flywheel	30 (22.12)
Injectors (screw)	25 (18.43)
Injectors (nut)	30 (22.12)
Fuel filter	25 (18.43)
Oil filter	25 (18.43)
Oil pump	25 (18.43)
Water pump	25 (18.43)
Alternator	50 (36.87)
Fuel pump	25 (18.43)
Sensors (oil pressure, water temperature, etc.)	25 (18.43)

PREVIEW - YOUFIXTHIS.COM

Download full manual at youfixthis.com

INDEX

SECTION 00 - INTRODUCTION

1. SAFETY INSTRUCTIONS 1
2. GENERAL SAFETY INSTRUCTIONS 2
3. TECHNICAL SPECIFICATIONS 12

SECTION 10 - ENGINE

1. DIESEL ENGINE 1
2. FUEL SYSTEM 2
3. COLD START DEVICE (NORTH AMERICA) 5

SECTION 25 - FRONT AXLES

1. REMOVAL AND INSTALLATION 1
2. DIMENSIONS 3
3. TECHNICAL SPECIFICATIONS 5
4. OIL CHANGE 11
5. DISASSEMBLY AND ASSEMBLY 14
5.1 DISC BRAKE ASSY (W50BTC) 14
5.1.2 BRAKE CALIPER 21
5.2 DISK BRAKE ASSY (W60BTC, W70BTC, W80BTC) 29
5.2.2 BRAKE CALIPER 35
5.3 REDUCTION GEAR (W50BTC) 39
5.4 REDUCTION GEAR (W60BTC, W70BTC, W80BTC) 42
5.5 WHEEL HUB (W50BTC) 45
5.6 WHEEL HUB (W60BTC, W70BTC, W80BTC) 54
5.7 WHEEL SHAFT (W50BTC) 60
5.8 BRAKE AND WHEEL SHAFT (W60BTC, W70BTC, W80BTC “STANDARD” AND “HIGH SPEED”) 64
5.9 DIFFERENTIAL SUPPORT 72
5.10 DIFFERENTIAL ASSY 80
5.11 PINION 87
6. TROUBLESHOOTING 93
7. SPECIAL TOOLS 96

SECTION 27 - REAR AXLES

1. REMOVAL AND INSTALLATION 1
2. DIMENSIONS 3
3. TECHNICAL SPECIFICATIONS 7
4. OIL CHANGE 14
5. DISASSEMBLY AND ASSEMBLY 18
5.1 MOTOR TB150 18
5.2 MOTOR TB138.5 “HIGH SPEED” 21
5.3 TRANSMISSION BOX TB150 25
5.4 TRANSMISSION TB138.5 “HIGH SPEED” 34

PREVIEW - YOUFIXTHIS.COM

Download full manual at youfixthis.com

1. SAFETY INSTRUCTIONS



Carefully read the safety rules contained herein and follow advised precautions to avoid potential hazards and to safeguard your safety and personal integrity.
In this manual you will find the following indications:

⚠ WARNING
This symbol warns about the possibility of potential damages to the machine that can involve the operator's safety.

⚠ DANGER
With specific warnings about potential dangers for the operator's or other persons integrity directly or indirectly involved.

The non compliance with the warning preceded by the above mentioned key-words (**WARNING** and **DANGER**) can cause serious accidents or even the death of the persons involved.
Moreover in the present Manual have been given some instructions with texts in italics, preceded by the words **NOTE** and **CAUTION**, with following meanings for machine protection:

NOTES: it emphasizes and underlines to the operator the correct technique or correct procedure to follow.

⚠ WARNING
It warns the operator of a possible hazard of machine damage in case he does not follow a determined procedure.

Your safety and that of people around you depends on you. It is essential that you understand this manual for the correct operation, inspection, lubrication and maintenance of this machine.

PREVIEW - YOUFIXTHIS.COM

Download full manual at youfixthis.com

5.5 REDUCTION GEAR (W50BTC) 54
5.6 REDUCTION UNIT (W60BTC, W70BTC, W80BTC) 57
5.7 WHEEL HUB (W50BTC) 61
5.8 WHEEL HUB (W60BTC, W70BTC, W80BTC) 70
5.9 WHEEL SHAFT (W60BTC, W70BTC, W80BTC) 76
5.10 DIFFERENTIAL SUPPORT 80
5.11 DIFFERENTIAL ASSY 88
5.12 LIMITED SLIP DIFFERENTIAL ASSY 94
5.13 PINION 101
6. TROUBLESHOOTING 107
7. SPECIAL TOOLS 110

SECTION 33 - BRAKE SYSTEM

1. BRAKE SYSTEM DIAGRAM 1
1.1 STANDARD DIAGRAM (W50BTC) 1
1.2 STANDARD DIAGRAM (W60BTC, W70BTC, W80BTC) 2
1.3 “HIGH SPEED” DIAGRAM (W60BTC, W70BTC, W80BTC) 3
2. TECHNICAL SPECIFICATIONS 4
2.1 BRAKE PEDAL VALVE 4
2.2 PRESSURE SWITCHES 4
3. OPERATION 5
3.1 SERVICE BRAKE OPERATION 7
3.2 PARKING BRAKE OPERATION 9
4. BRAKE PEDAL VALVE 10
5. PRESSURE SWITCHES 11
6. BRAKE ACCUMULATOR 12
6.1 TECHNICAL SPECIFICATIONS 12
7. CHECKS AND ADJUSTMENTS 13
7.1 SERVICE BRAKE SYSTEM PRESSURE CHECK 13
7.2 ACCUMULATOR PRESSURE CHECK 14
7.3 PEDAL ANGLE ADJUSTMENT 15
7.4 “INCHING” VALVE ADJUSTMENT 16
8. TROUBLESHOOTING 17

SECTION 35 - HYDRAULIC SYSTEM

1. HYDRAULIC DIAGRAMS 1
1.1 HYDRAULIC DIAGRAM FOR W50BTC 1
1.2 HYDRAULIC DIAGRAM FOR W50BTC WITH OPTIONAL OUTFITS 3
1.3 HYDRAULIC DIAGRAM FOR W60BTC 5
1.4 HYDRAULIC DIAGRAM FOR W60BTC WITH OPTIONAL OUTFITS 7
1.5 HYDRAULIC DIAGRAM FOR W70BTC 9
1.6 HYDRAULIC DIAGRAM FOR W70BTC WITH OPTIONAL OUTFITS 11
1.7 HYDRAULIC DIAGRAM FOR W80BTC 13
1.8 HYDRAULIC DIAGRAM FOR W80BTC WITH OPTIONAL OUTFITS 15
2. TRANSMISSION 17
2.1 HYDRAULIC DIAGRAM 17
2.2 OPERATION 18
2.3 ADJUSTMENTS 20

PREVIEW - YOUFIXTHIS.COM

Download full manual at youfixthis.com

FRONT AXLE “STANDARD” and “HIGH SPEED” version CA409293S (W60BTC, W70BTC, W80BTC)

Model	28.25
Differential type	limited slip
Dry weight	/
Bevel gear reduction ratio	3.66 / 1
Reduction gear ratio	6.00 / 1
Total reduction ratio	22.00 / 1
Input rotation direction	clockwise
Bevel gear play	0.17 ÷ 0.24 mm (0.006 ÷ 0.009 in)
Pinion bearing preload (measured on D = 34.5 mm (1.35 in) without seal rings)	P = 9.2 ÷ 13.7 daN (P = 20.68 ÷ 30.80 lbf)
Ring gear-pinion bearing total preload (measured on D = 34.5 mm (1.35 in) without seal rings)	T = (P + 2.5) ÷ (P + 3.8) daN T = (P + 5.62) ÷ (P + 8.54) lbf
Maximum service pressure	55 bar (797 psi)
Differential oil capacity	8 litres (2.10 gal)
Reduction gear oil capacity (each side)	0.6 litres (0.20 gal)

PREVIEW - YOUFIXTHIS.COM

Download full manual at youfixthis.com

In order to extract the ring gear carrier from its housing, use at least two of the just removed screws (1) and screw them in the threaded holes they were extracted from.

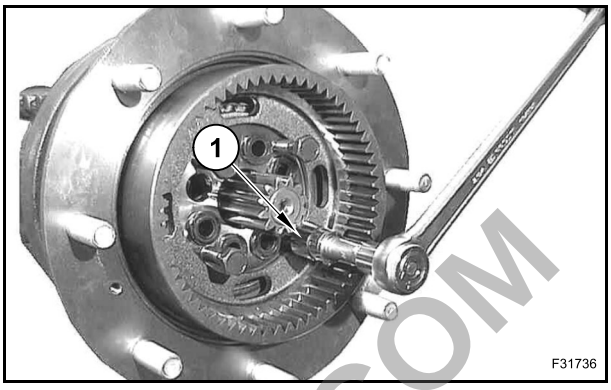

Remove the ring gear carrier (2) together with the ring gear (3).

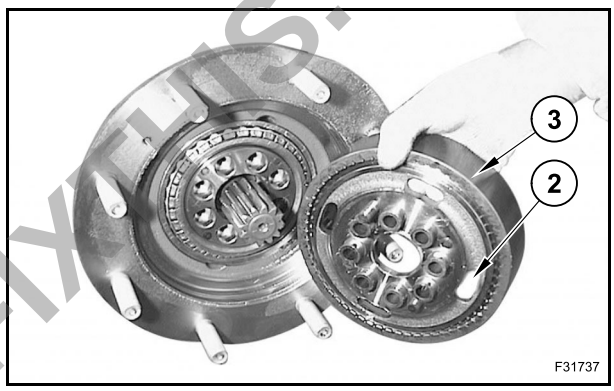

Only if necessary, remove the bushings (4) of the ring gear carrier.

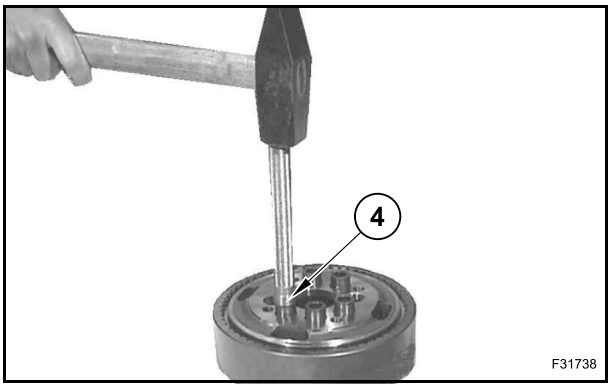

Remove the snap ring (5).

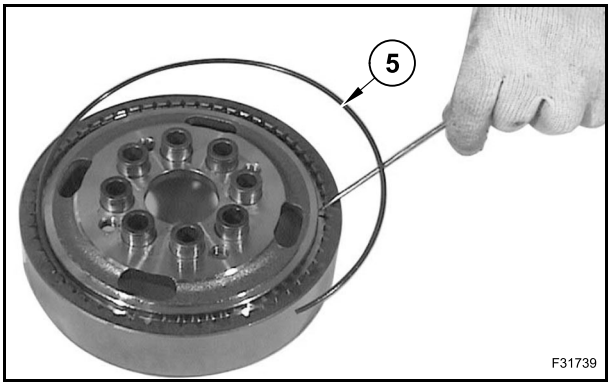

PREVIEW - YOUFIXTHIS.COM

Download full manual at youfixthis.com

CA147189 - CA150146 (W60BTC, W70BTC)

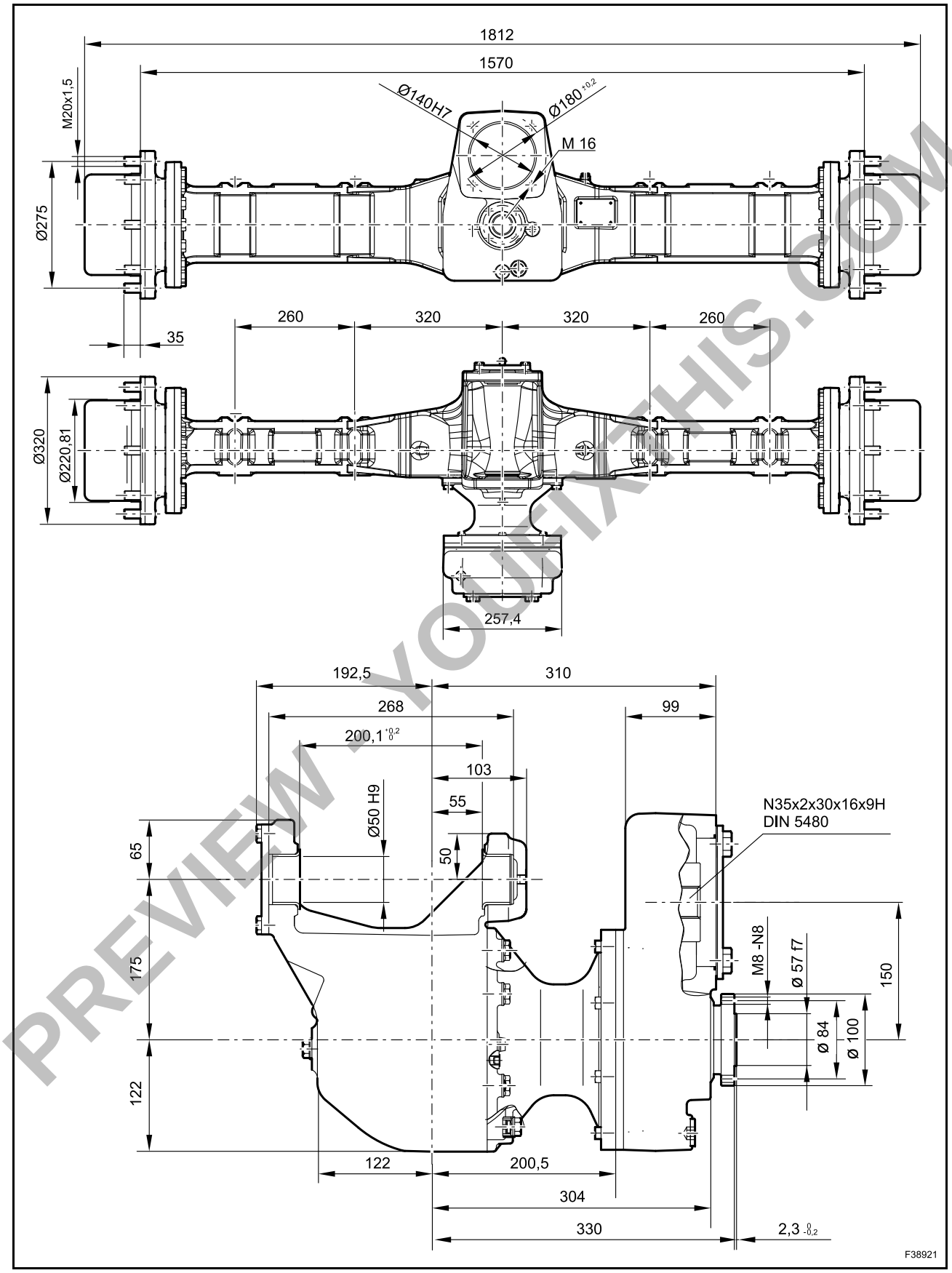

PREVIEW - YOUFIXTHIS.COM

Download full manual at youfixthis.com

Install the spring seat (42), the spring (43) and the spring seat (44) on the shaft (21).

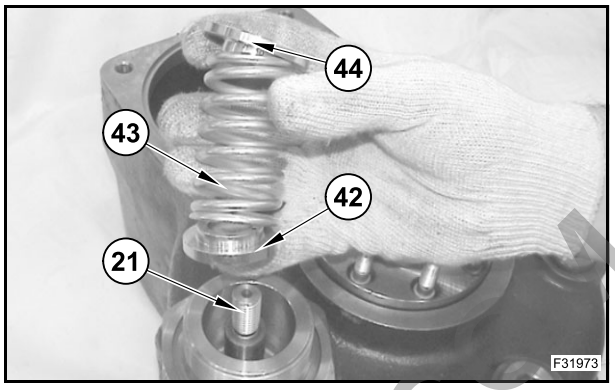

Apply some Loctite 242 on the thread of the shaft (21).
Install the piston (45) onto the shaft (21).

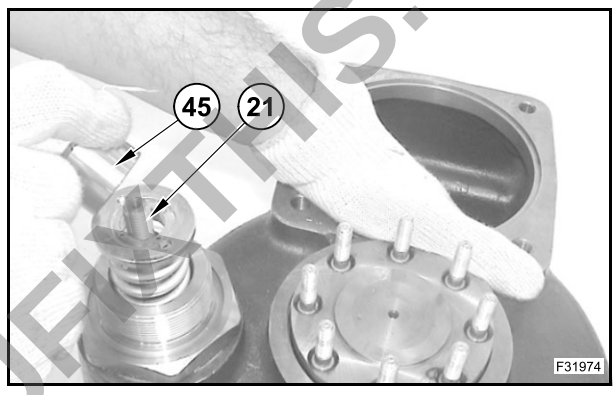

Tighten the piston (45) to the prescribed torque of 140 Nm (103.26 lbf·ft).
Assemble a new O-ring (41) in the fitting (40).

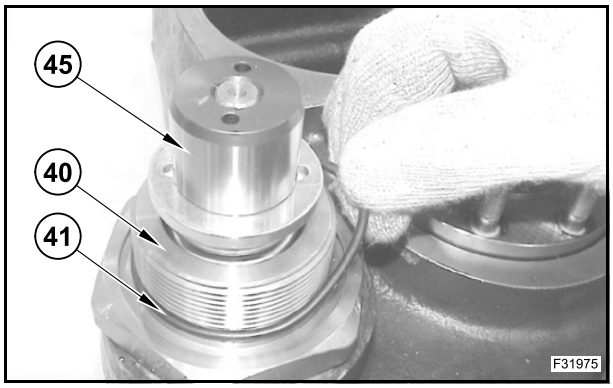

Assemble a new O-ring (46) in the sleeve (47).

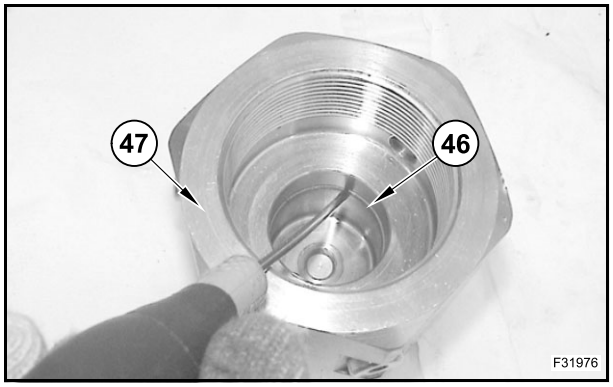

PREVIEW - YOUFIXTHIS.COM

Download full manual at youfixthis.com

Assemble discs (5) and (6).

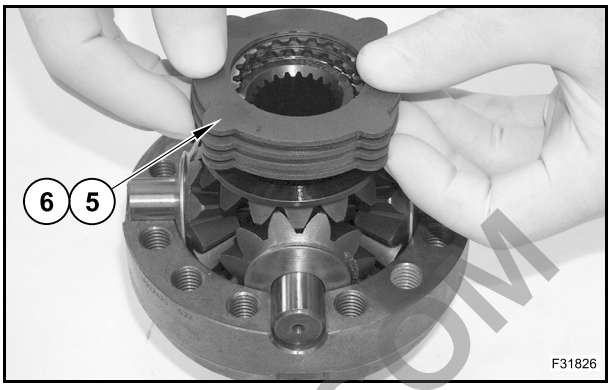

Assemble the two differential half boxes (4) and (23).

⚠ WARNING
Carefully check that the reference marks of both differential half boxes are aligned.

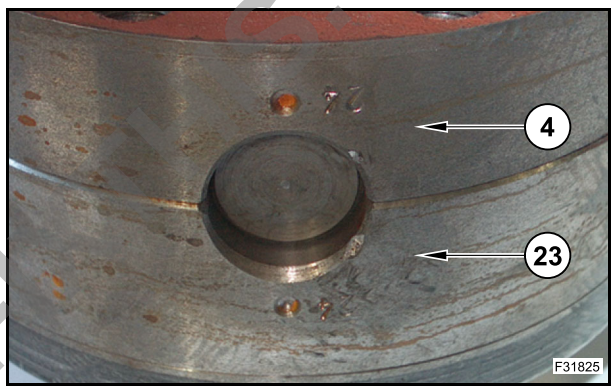

Assemble the ring gear (2) by using a hammer.

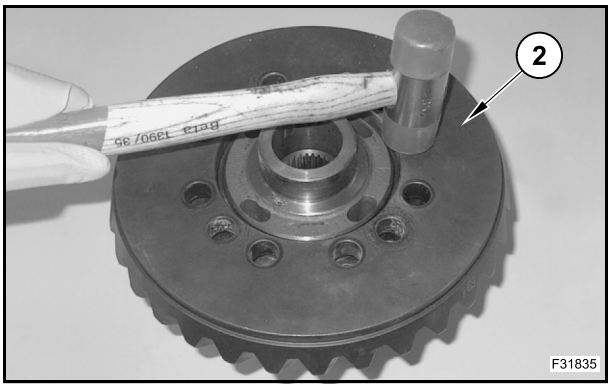

Apply some Loctite 242 on the thread of the screws (1).

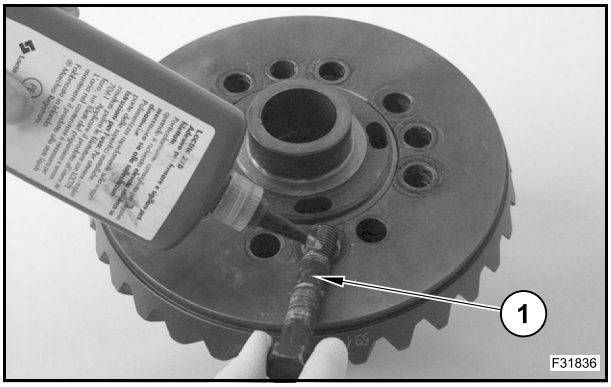

PREVIEW - YOUFIXTHIS.COM

Download full manual at youfixthis.com

SUPPLY PRESSURE RELIEF VALVE (F) (W80BTC)

The supply pressure is checked on the measuring point (P_{SP}) and adjusted on feed pressure relief valve (F).
The rated value of the supply pressure is:
25 ± 2 bar (362 ± 29 psi) at n_{mot} = 2300 rpm.

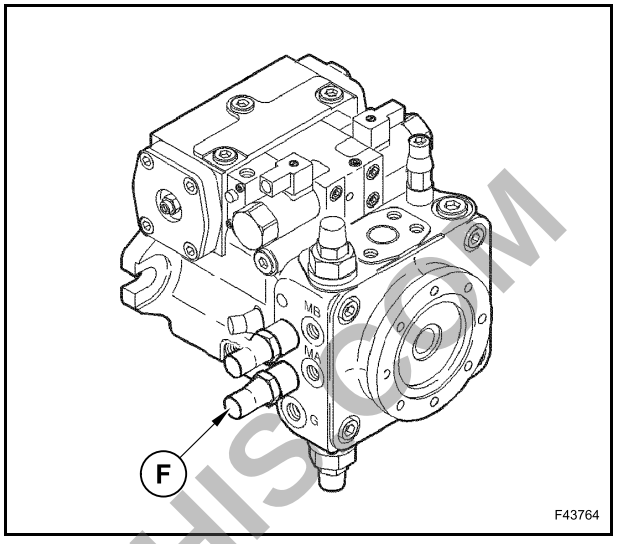

Should it be necessary to correct the pressure value, it is possible to adjust it by means of the setscrew (3) of the supply pressure relief valve (F).
By unscrewing the screw, the feed pressure is reduced; by tightening it, it increases.

NOTE: during the basic adjustment (for instance after valve replacement or disassembly), first of all relieve the pressure of the valve spring by turning the setscrew (3) to the left and connect a pressure gauge (measuring range 60 bar (870.2 psi)) on the measuring point (P_{SP}). Then start the engine and slowly tighten the setscrew (3), until the desired supply pressure is achieved, according to the relevant engine rpm.

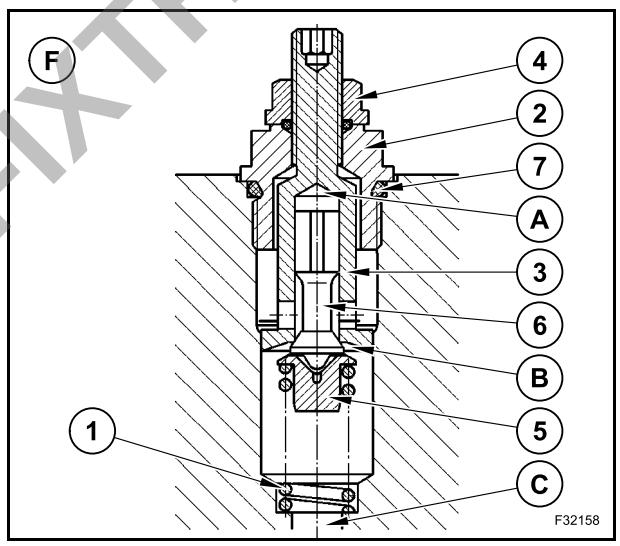

1. Spring
2. Valve body
3. Setscrew
4. Locknut
5. Distance sleeve
6. Piston
7. Gasket

A. Piston side
B. Sealing/Control edge
C. Tank channel

PREVIEW - YOUFIXTHIS.COM

Download full manual at youfixthis.com

Caulk the bearings (18) and (20) on the shaft (21).
Determine the value of the shim (19) according to the value of M (correct preload dimension).

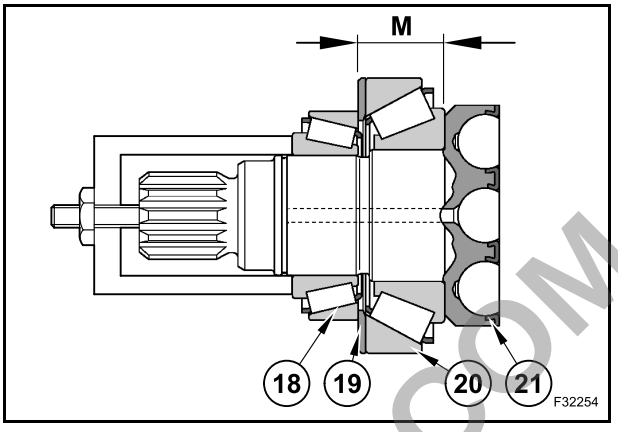

Preload the bearings.
Determine the value of shim (17):
- assemble the elastic ring (16) to determine the value S;
- determine the value of the shim and disassemble the elastic ring;
- assemble the shim (17) and reassemble the elastic ring (16).

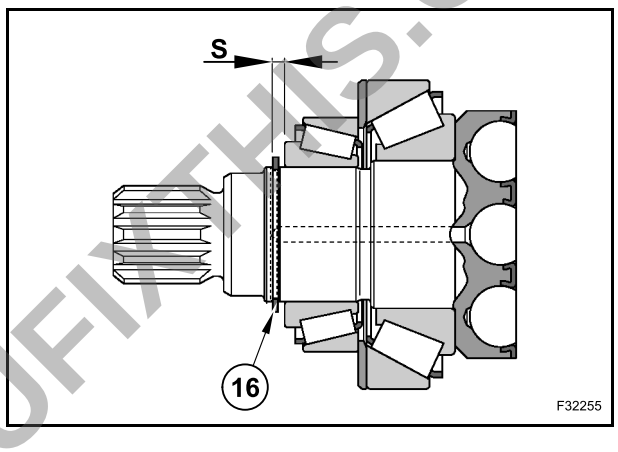

Assemble the gaskets (28) on the pistons. Assemble the pistons (27) and the central piston (24) on the disc (22).
Fit disc with pistons and fix it by tightening screws (23).

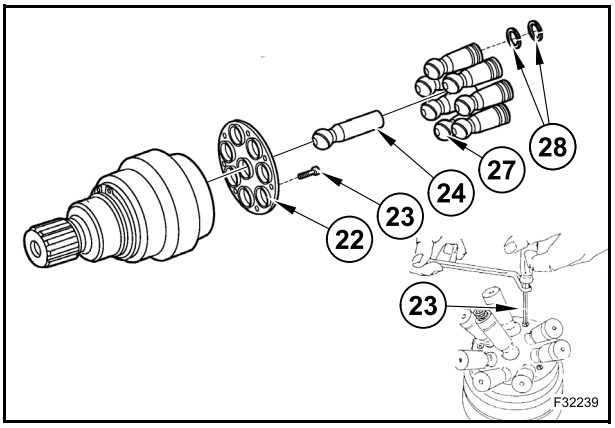

PREVIEW - YOUFIXTHIS.COM

Download full manual at youfixthis.com

W50BTC - W60BTC - W70BTC

Unscrew and remove the nut (17).
Slide out the cylinder rod (1), the piston assy (14) and the cylinder head assy (9).

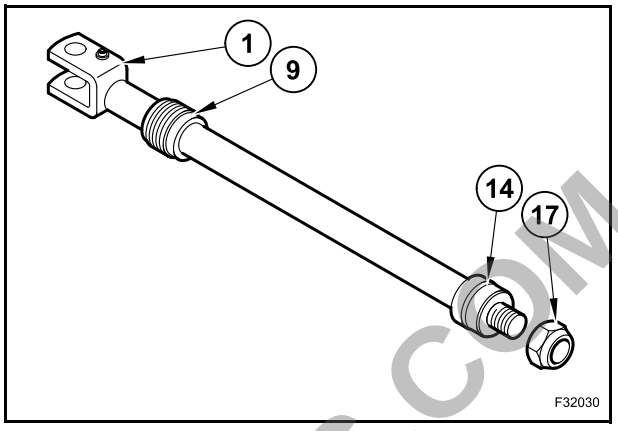

Only if necessary:
- remove the wiper ring (8), the seal ring (10), the guide bushing (11) and the back-up ring (6) with the O-ring (7) from the cylinder head (9);
- remove the O-ring (13), the piston guide rings (15) and the piston gasket (16) from the piston (14).

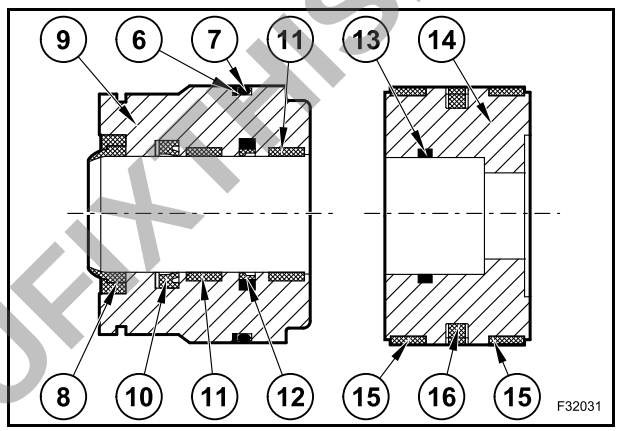

W80BTC

Remove the piston lock ring (17).
Loosen and remove the piston assy (14).
Take out the cylinder head assy (9) from the cylinder rod (1).

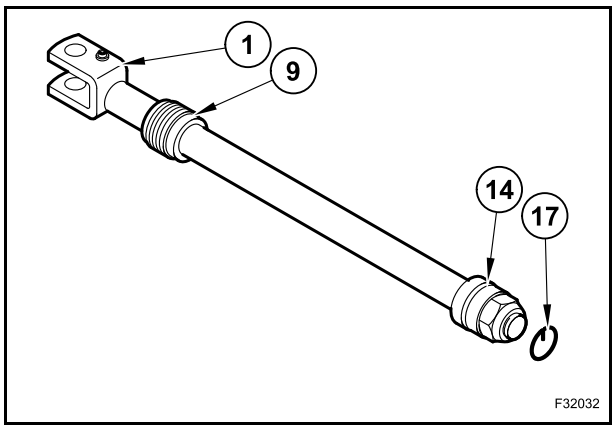

PREVIEW - YOUFIXTHIS.COM

Download full manual at youfixthis.com

LIGHTS

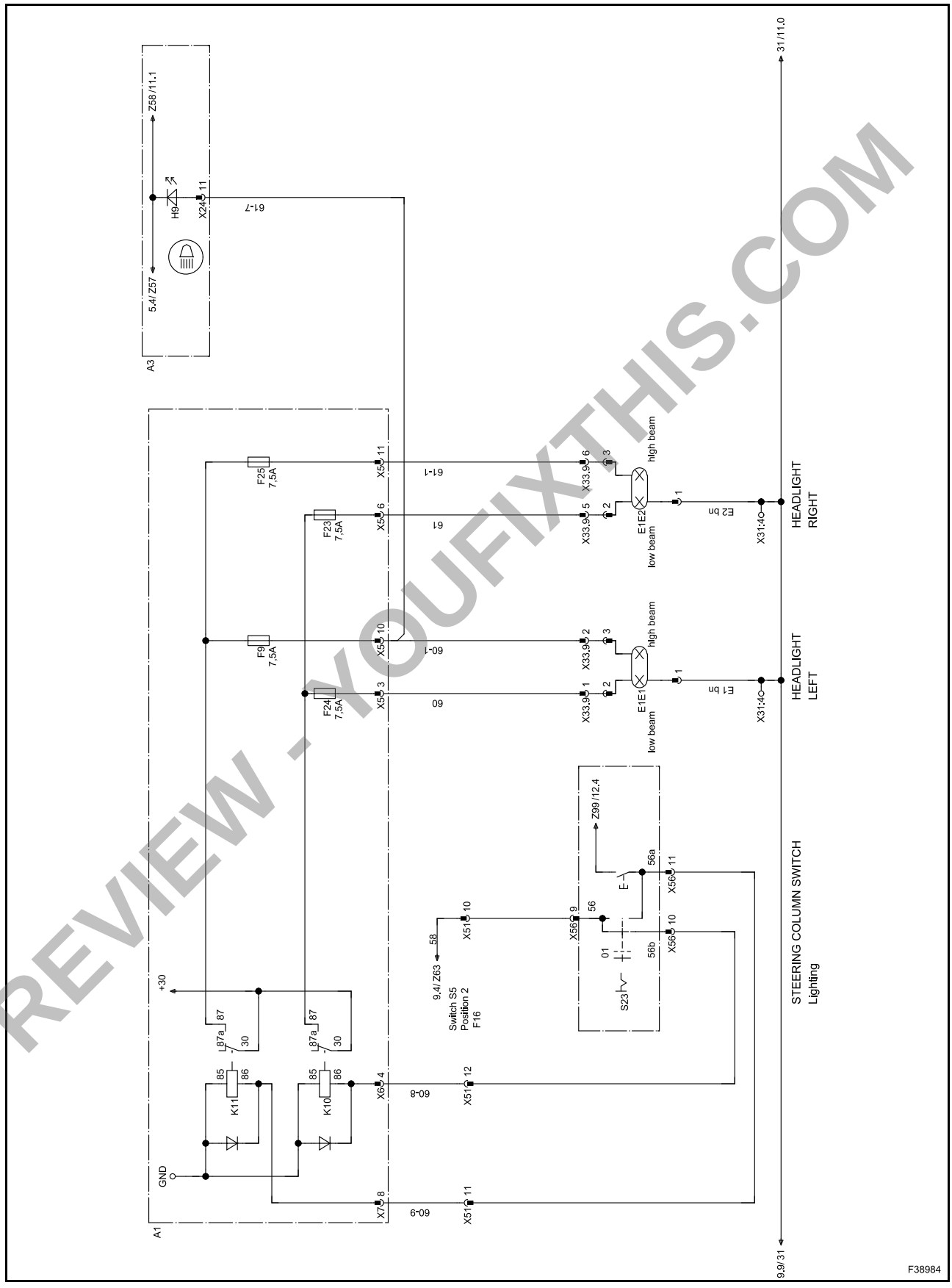

PREVIEW - YOUFIXTHIS.COM

Download full manual at youfixthis.com

PREVIEW ONLY

You're viewing 18 of 482 pages

The full manual includes:

- All 482 pages, complete
- Searchable PDF (find any keyword)
- No watermarks
- Instant download
- Print-ready quality

GET FULL MANUAL NOW

New Holland W50BTC, W60BTC, W70BTC, W80BTC Repair Manual

Scan or click anywhere
youfixthis.com

Click anywhere on this page to get the full manual