DISASSEMBLING ENGINE

Before disassembling the engine, be sure to completely drain the engine oil and cooling water.

REMOVING THE OUTER PARTS

RIGHT SIDE OF ENGINE

Removing the water manifold

1) Remove the water pipe.
2) Remove the water pipe bracket.

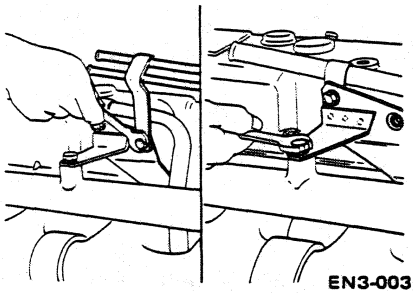
EN3-003

3) Remove the bypass tube mounting bolts.

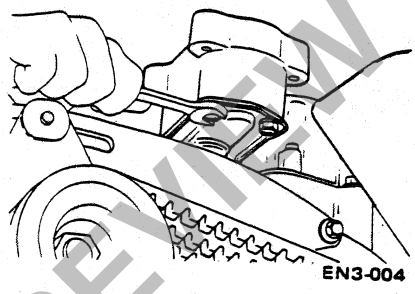
EN3-004

4) Remove the water manifold.

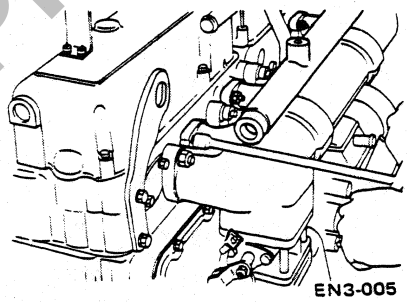
EN3-005

Removing the exhaust air cylinder and exhaust manifold

1) Remove the cotter pin and pull out the clevis pin.

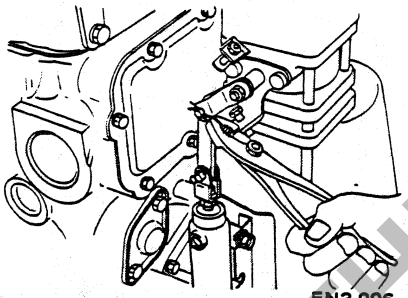
EN3-006

2) Remove the exhaust air cylinder.

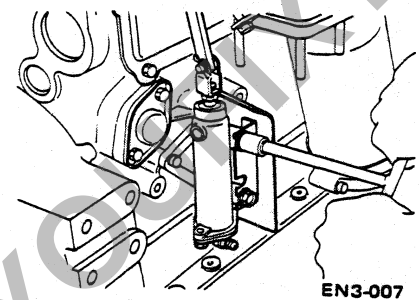
EN3-007

3) Remove the exhaust shutter.
4) Remove the exhaust air cylinder.
5) Remove the air cylinder mounting bracket.
6) Remove the exhaust manifold.

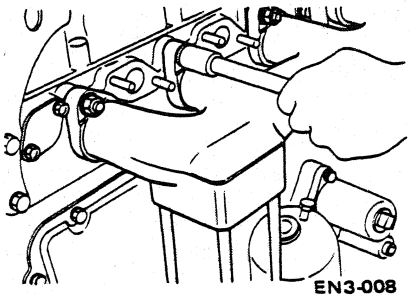
EN3-008

Removing the water bypass tube

1) Remove the water bypass tube mounting bolt.

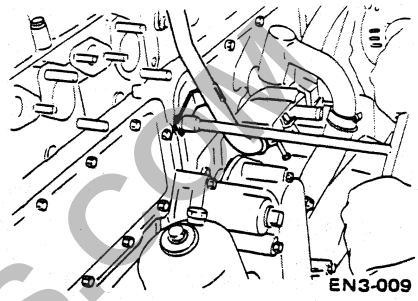
EN3-009

2) Loosen the bypass tube hose clamps and pull out the tube.

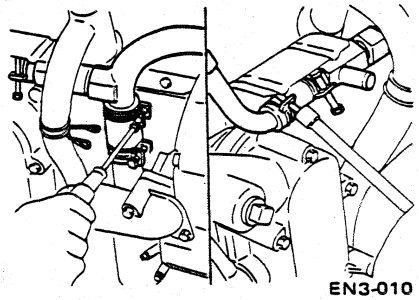
EN3-010

Removing the oil filter

Remove the oil filter.

Note
Place a container to catch oil before removing the oil filter.

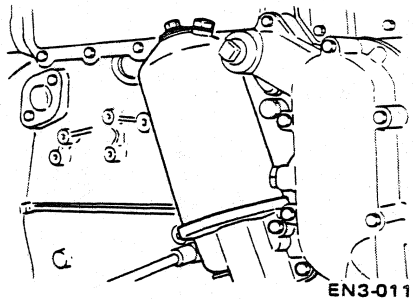
EN3-011

Removing the oil cooler and oil cooler bracket

1) Remove the water tube.

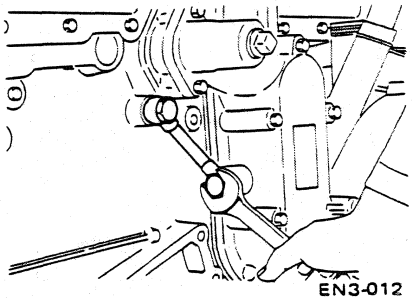
EN3-012

PREVIEW - YOUFIXTHIS.COM

Download full manual at youfixthis.com

ENGINE SERVICE MANUAL

MODEL
NE6

Applicable Engine Numbers
NE6-000001 ~

FOREWORD

This service manual covers repair procedure of the NE6 diesel engine. In order for the engine displays 100% performance at all times, and to expand the life of each part, daily inspection and servicing must, of course, be performed according to a plan, but proper overhaul and repair in accordance with the maintenance standards is also vital.

Keep this manual in the shop for everyone engaging in servicing of the engine.

Nissan Diesel reserves the right to make changes for improvement at any time without notice.

Accordingly, some of the descriptions contained in this manual may not be applicable to your particular vehicle.

NISSAN DIESEL MOTOR CO., LTD.
TOKYO, JAPAN

QUICK REFERENCE INDEX

1. GENERAL
2. DISASSEMBLY, JUDGMENT
3. ENGINE DISASSEMBLY AND REASSEMBLY
4. ENGINE PROPER
5. CYLINDER HEAD AND VALVE MECHANISM
6. LUBRICATION SYSTEM
7. COOLING SYSTEM
8. FUEL SYSTEM
9. AIR INTAKE AND EXHAUST SYSTEM
10. ELECTRICAL SYSTEM
11. AUXILIARY EQUIPMENT
12. ENGINE TEST PROCEDURES
13. SERVICE DATA
14. TOOLS

© 1985 NISSAN DIESEL MOTOR CO., LTD.
Issued: Jun. 1985
8506343-13906-500-KIS(M)

PREVIEW - YOUFIXTHIS.COM
Download full manual at youfixthis.com

OIL FILTER

Disassembly

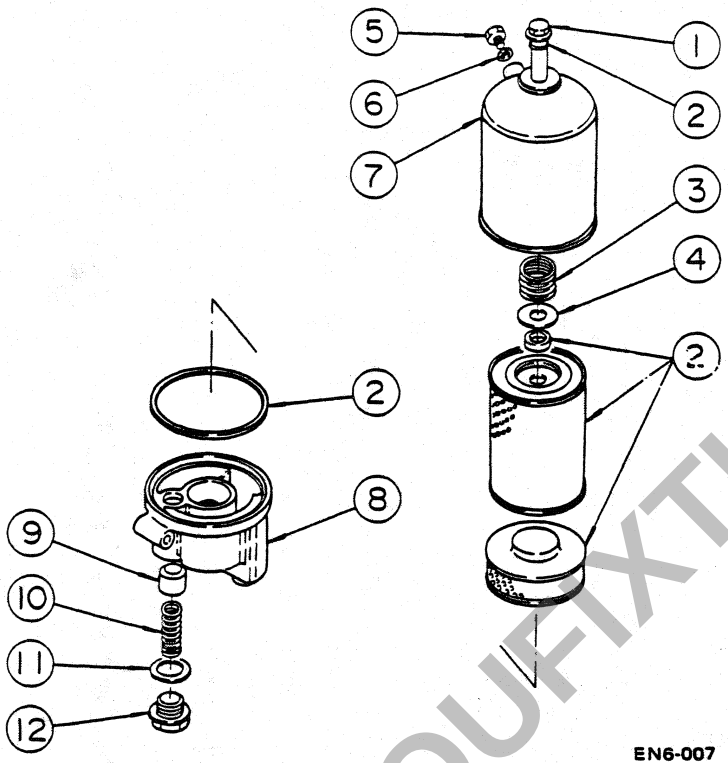

Full-flow oil filter

1 Center bolt
2 Element Kit
3 Set spring
4 Spring washer
5 Air plug
6 Packing
7 Oil filter case
8 Oil filter bracket
9 Valve
10 Valve spring
11 Packing
12 Valve cap

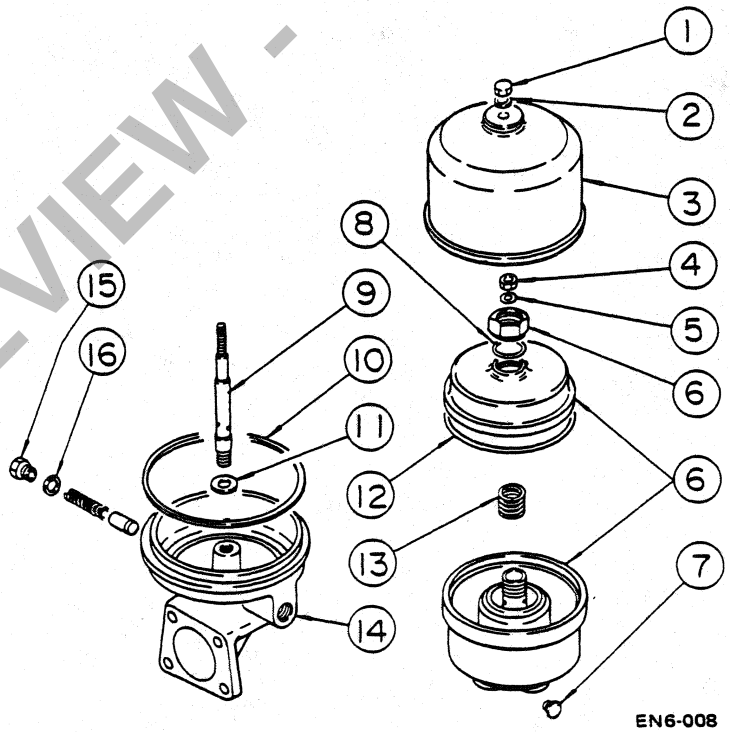

Bypass oil filter

1 Cap nut
2 Packing
3 Cover assembly
4 Nut
5 Thrust washer
6 Rotor assembly
7 Nozzle
8 O-ring
9 Spindle
10 Cover packing
11 Washer
12 O-ring
13 Spring
14 Body
15 Plug
16 Valve packing
17 Valve spring
18 Valve

PREVIEW - YOUFIXTHIS.COM

Download full manual at youfixthis.com

AIR COMPRESSOR

MODEL M-10

DISASSEMBLY

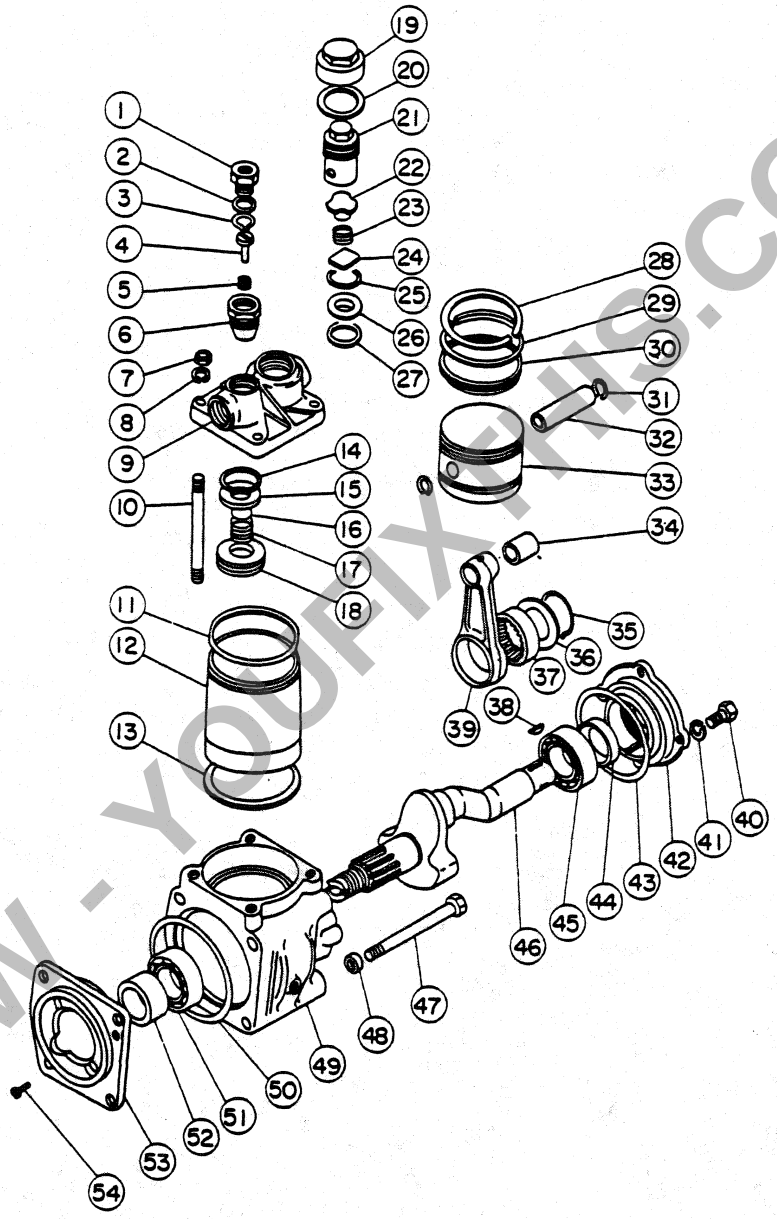

EP11-073

1 Connector
2 Packing
3 Snap ring
4 Unloader valve
5 Valve spring
6 Unloader valve guide
7 Nut
8 Lock washer
9 Cylinder head
10 Stud
11 Packing
12 Cylinder
13 Packing
14 Suction valve packing
15 Suction valve seat
16 Suction valve
17 Suction valve spring
18 Suction valve holder
19 Delivery valve cap
20 Packing
21 Delivery valve holder
22 Delivery valve spring holder
23 Valve spring
24 Delivery valve
25 Packing
26 Delivery valve seat
27 Packing
28 Compression ring (No. 1)
29 Compression ring (No. 2)
30 Oil ring
31 Stop ring
32 Piston pin
33 Piston
34 Bushing
35 Stop ring
36 Ring
37 Needle bearing
38 Key
39 Connecting rod
40 Bolt
41 Lock washer
42 Bearing holder
43 O-ring
44 Oil seal
45 Ball bearing holder
46 Crankshaft
47 Bolt
48 Seal washer
49 Crank case
50 O-ring
51 Ball bearing
52 Collar
53 Bearing holder
54 Screw

PREVIEW - YOUFIXTHIS.COM

Download full manual at youfixthis.com

PREVIEW ONLY

You're viewing 4 of 228 pages

The full manual includes:

- All 228 pages, complete
- Searchable PDF (find any keyword)
- No watermarks
- Instant download
- Print-ready quality

GET FULL MANUAL NOW

Nissan NE6, NISSAN NE6T, NE6T Shop Manual

Scan or click anywhere
youfixthis.com

Click anywhere on this page to get the full manual