DISASSEMBLING ENGINE

Before disassembring the engine, be sure to completely drain engine oil and cooling water.

TURBOCHARGER

1) Remove the intake duct and duct hose.

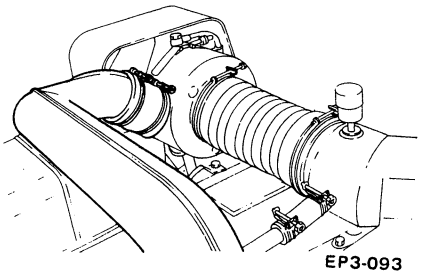
EP3-093

2) Remove the turbocharger inlet hose.

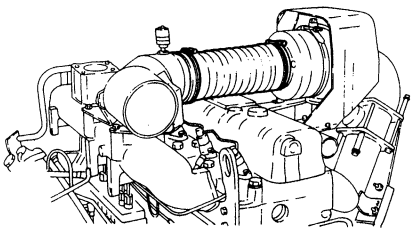
EP3-094

3) Remove the shield plate.

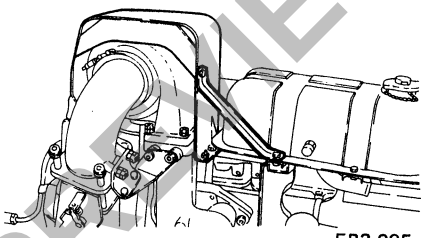
EP3-095

4) Remove the exhaust shutter and exhaust tube.

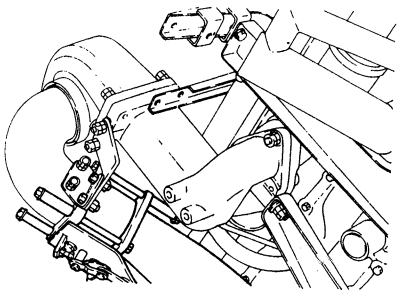
EP3-096

5) Loosen the V-band coupling and remove the exhaust tube connector.

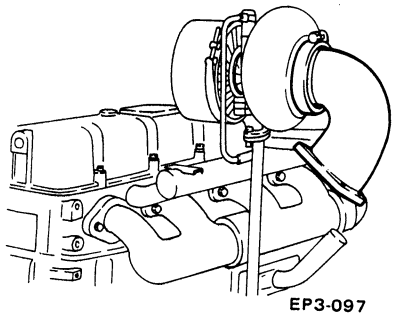
EP3-097

6) Remove the oil inlet tube and outlet pipe.

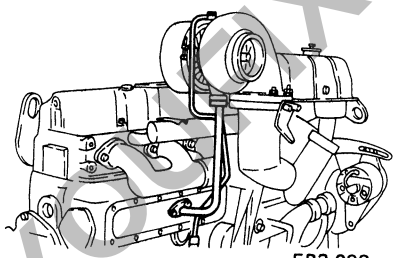
EP3-098

7) Remove the turbocharger.

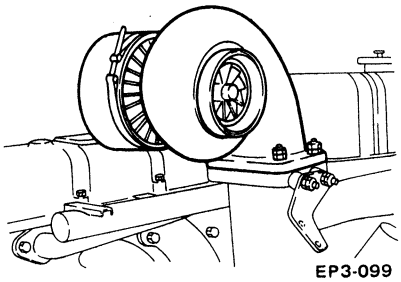
EP3-099

RIGHT SIDE OF ENGINE

1) Remove the water manifold, water by pass tube and stay.

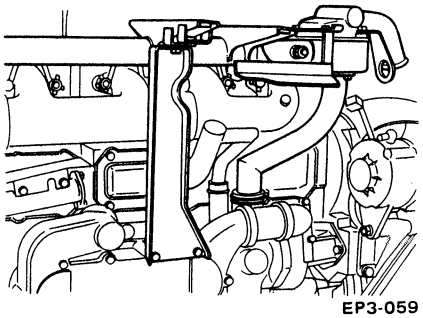
EP3-059

2) Remove the air cylinder assembly and exhaust shutter assembly.

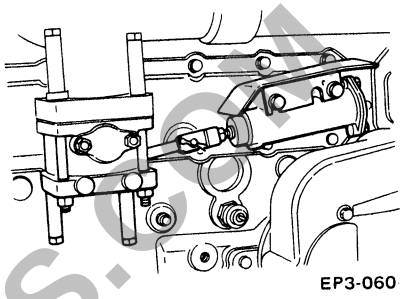
EP3-060

3) Remove the exhaust manifold.

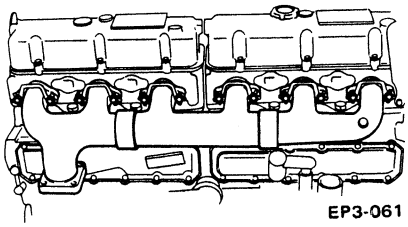
EP3-061

4) Remove the full flow oil filter and by-pass oil filter.

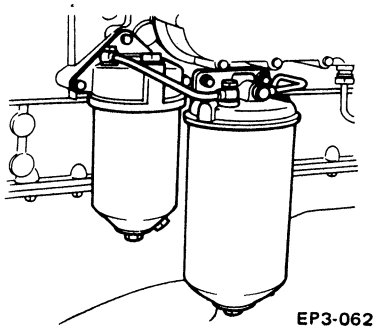
EP3-062

5) Remove the water inlet ducts together with their gasket and O-rings.

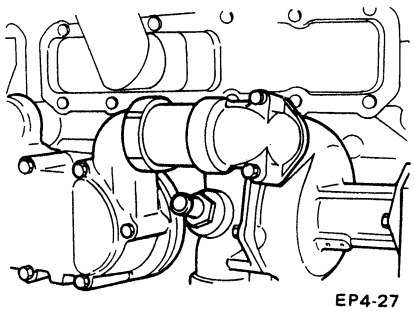
EP4-27

PREVIEW - YOUFIXTHIS.COM

Download full manual at youfixthis.com

ENGINE SERVICE MANUAL

MODELS
PD6 and PD6T

Applicable Engine Numbers
PD6 070000-
PD6T 048000T-

FOREWORD

This service manual covers repair procedure of the PD6 and PD6T diesel engines. In order for the engine displays 100% performance at all times, and to expand the life of each part, daily inspection and servicing must, of course, be performed according to a plan, but proper overhaul and repair in accordance with the maintenance standards is also vital.

Keep this manual in the shop for everyone engaging in servicing of the engine.

Nissan Diesel reserves the right to make changes for improvement at any time without notice.

Accordingly, some of the descriptions contained in this manual may not be applicable to your particular vehicle.

QUICK REFERENCE INDEX

1. GENERAL
2. DISASSEMBLY JUDGMENT
3. ENGINE DISASSEMBLY AND REASSEMBLY
4. ENGINE PROPER
5. CYLINDER HEAD AND VALVE MECHANISM
6. LUBRICATION SYSTEM
7. COOLING SYSTEM
8. FUEL SYSTEM
9. AIR INTAKE AND EXHAUST SYSTEM
10. ELECTRICAL SYSTEM
11. AUXILIARY EQUIPMENT
12. ENGINE TEST PROCEDURES
13. SERVICE DATA
14. TOOLS

Issued: Aug. 1989
8908261-20881-300-K9S(M)

© 1989 NISSAN DIESEL MOTOR CO., LTD.

PREVIEW - YOUFIXTHIS.COM

Download full manual at youfixthis.com

20) Pull out the piston and connecting rod.

Note
Before pulling out the piston, be sure to remove the carbon accumulated at the top portion of the cylinder.

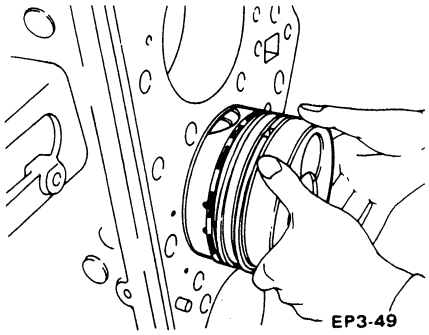
EP3-49

21) Measure the crankshaft end play, and record the results.

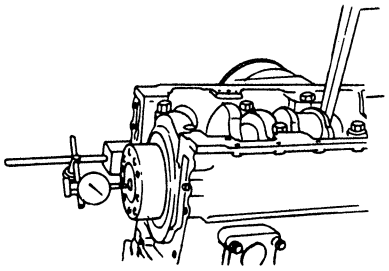
EP3-57

22) Remove the main bearing shell (lower) and main bearing cap.

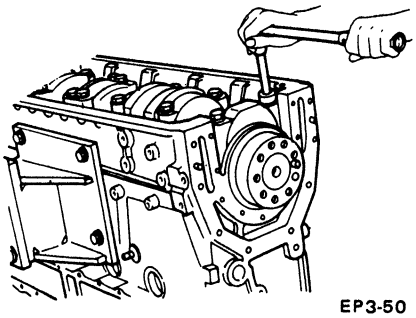
EP3-50

23) Remove the crankshaft, thrust washer and main bearing shell (upper).

Notes
1. **Keep the upper and lower thrust washers together as a matched set.**
2. **Keep the main bearing upper and lower shells as a matched set for each main bearing cap.**

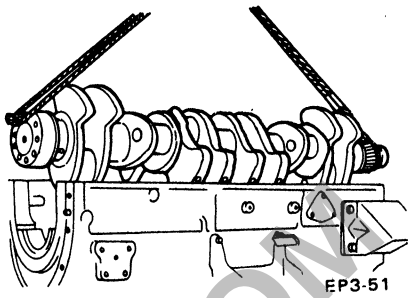
EP3-51

24) Remove the oil jet (piston cooling oil jet).

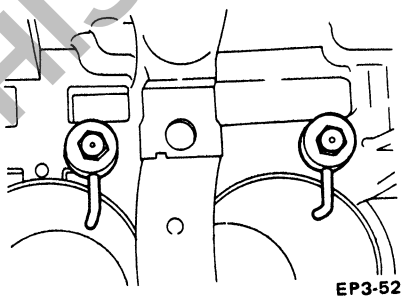
EP3-52

PREVIEW - YOUFIXTHIS.COM

Download full manual at youfixthis.com

CLEANING AND INSPECTION

INSPECTION BEFORE CLEANING

Turbocharger failure may sometimes be due to fauly engine parts. It is, therefore advisable to closely inspect parts for accumulation of carbon, presence of dirt or dust, obstruction of oil passages, etc. prior to cleaning, so that the cause of problems may be located easily.

CLEANING

After soaking all the parts in clean detergent for about 20 - 30 minutes, remove dirt and grime with a rough brush and then blow dry with compressed air.

Note

Be extremely careful not to damage parts. Avoid filing any rotating parts. Also be sure to clean parts completely. Failure to observe these points may cause the parts to become imbalanced.

Contents of inspection	Inspection point
Carbon accumulation (check whether parts are jammed).	o Shaft wheel journal part. o Outside periphery of center housing. o Inside periphery of heat shroud. o Inside wall of center housing. o Surface of blades of shaft wheel.
Lubrication (wear, burning, discoloration etc.).	o Shaft wheel journal part. o Journal bearing. o Center housing bore part. o Thrust collar. o Thrust bearing.
Oil leakage.	o Inside and outside periphery of turbine housing. o Inside periphery of heat shroud. o Inside of compressor housing. o Surface of back plate. o Surface of blades of shaft wheel. o Rear surface of impeller.
Foreign matter (Also check for obstruction while cleaning parts.).	o Inside of center housing. o Inside of turbine case. o Inside of compressor case.
Clogging.	o Center housing of oil hole. o Oil inlet adapter. o Oil outlet adapter.

PREVIEW - YOUFIXTHIS.COM

Download full manual at youfixthis.com

11. AUXILIARY EQUIPMENT

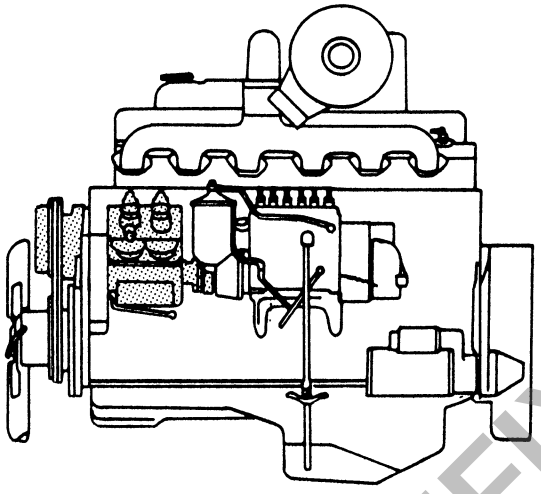

EP0-030

Auxiliary equipment consists of an air compressor and power steering oil pump.

PREVIEW - YOUFIXTHIS.COM

AIR COMPRESSOR 11– 1
Model M-10 . . . . . 11– 1
Model M-16 . . . . . 11– 6
POWER STEERING OIL PUMP 11–10
Normal control vehicle 11–10
Forward control vehicle 11–15

Download full manual at youfixthis.com

3. ENGINE DISASSEMBLY AND REASSEMBLY

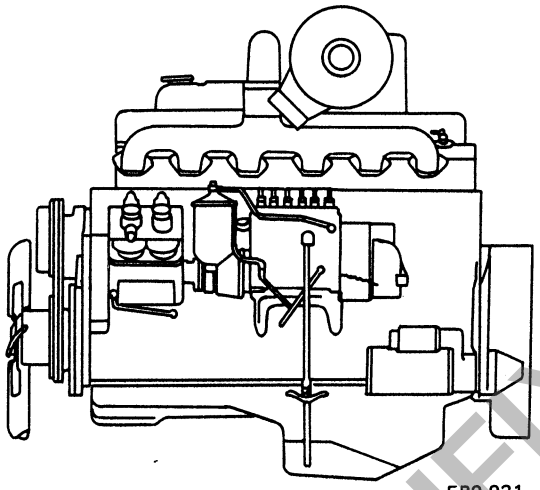

EP0-021

This chapter covers engine disassembly and reassembly. Refer to the chapter 4 "Engine proper" when inspecting the cylinder block, piston, crankshaft, etc.

DISASSEMBLING ENGINE 3– 1
- Turbocharger 3– 1
- Right side of engine 3– 1
- Front side of engine 3– 2
- Left side of engine 3– 2
- Rear side of engine 3– 3
- Removing cylinder head 3– 4
- Mounting on engine stand 3– 4
- Engine proper 3– 4
- Engine rear P.T.O. 3– 7

REASSEMBLING ENGINE 3– 8
- Engine proper 3– 8
- Removing the engine from the engine stand 3–11
- Rear side of engine 3–11
- Installing cylinder head 3–11
- Left side of engine 3–12
- Front side of engine 3–13
- Right side of engine 3–14
- Turbocharger 3–15
- Engine rear P.T.O. 3–15

ADJUSTMENT 3–16
- Adjusting the V-belt tension 3–16
- Adjusting the valve clearance 3–16
- Adjusting the accelerator switch 3–16
- Adjusting the RFD governor control linkage 3–17

PREVIEW - YOUFIXTHIS.COM

Download full manual at youfixthis.com

Model S210-98

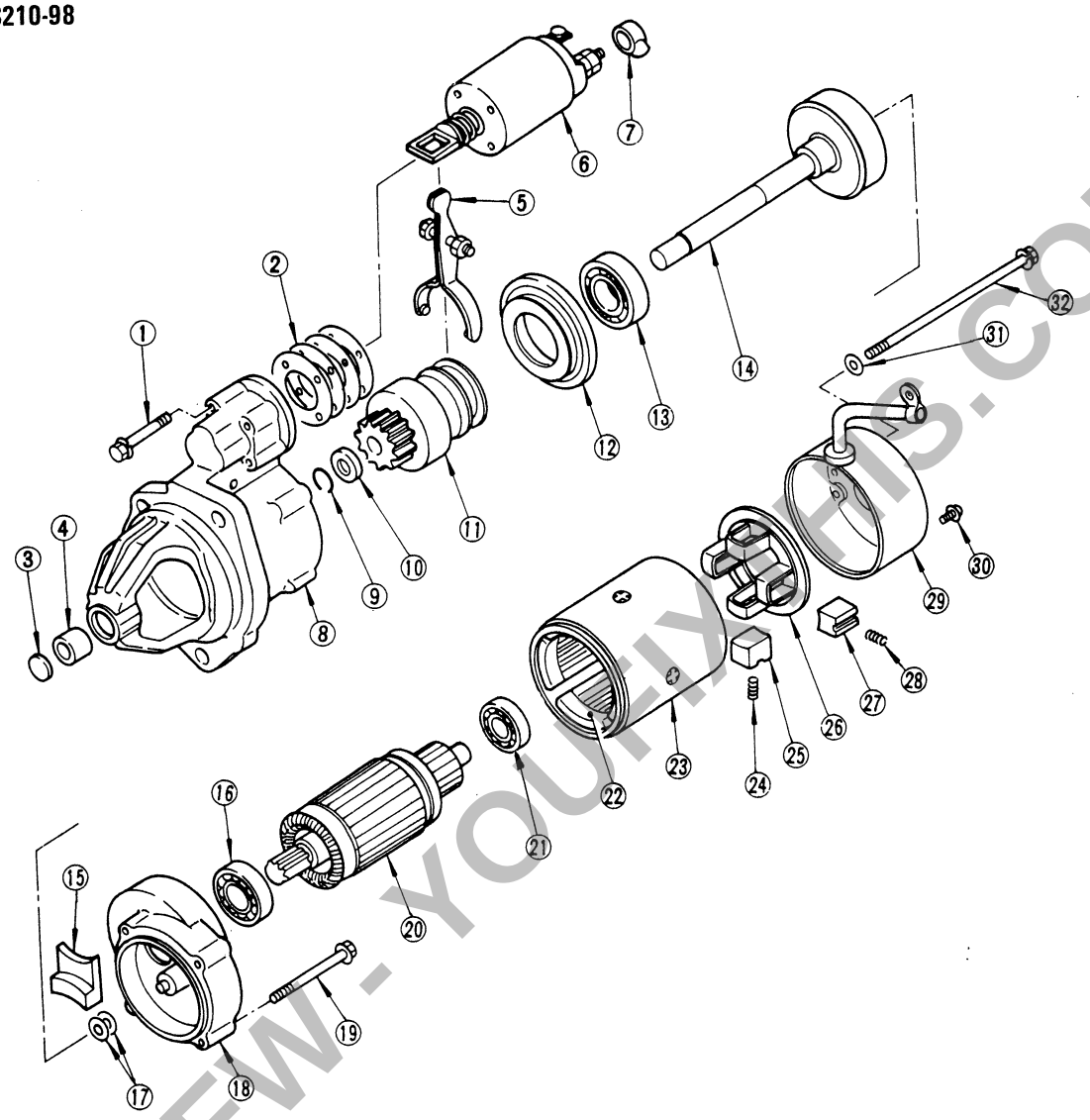

1 Bolt
2 Adjusting plate
3 Metal cover
4 Gear case metal
5 Shift lever
6 Magnetic switch assembly
7 Terminal cover
8 Gear case
9 Pinion stopper clip
10 Pinion stopper
11 Pinion assembly
12 Center bracket
13 Ball bearing
14 Gear shaft
15 Dust cover
16 Ball bearing
17 Thrust washer
18 Center bracket
19 Through bolt
20 Armature assembly
21 Ball bearing
22 Field coil assembly
23 Yoke assembly
24 Brush spring
25 Brush (+)
26 Brush holder
27 Brush (–)
28 Brush spring
29 Rear cover
30 Screw
31 Washer
32 Through bolt

PREVIEW - YOUFIXTHIS.COM

Download full manual at youfixthis.com

PREVIEW ONLY

You're viewing 7 of 240 pages

The full manual includes:

- All 240 pages, complete
- Searchable PDF (find any keyword)
- No watermarks
- Instant download
- Print-ready quality

GET FULL MANUAL NOW

Nissan PD6, PD6T, LK850 II Service Manual

Scan or click anywhere
youfixthis.com

Click anywhere on this page to get the full manual