LOWER FRAME

Item		Part number	Description	Q'ty	Chan.	Serial No.	Remarks
1	X	03710-01100	FRAME	1			
1-1		04710-00900	· BRACKET	2			
2		04710-01400	COVER	2			
3		03410-04000	COVER	2			
4		04310-03600	COVER	1			
5		11000-40816	BOLT	12			
6		11000-41020	BOLT	10			
7		11411-10010	WASHER	10			
8		11400-20010	WASHER, spring	10			
9		19130-03700	BEARING, slew	1			
9-1		19130-03709	· SEAL	1			
10		04323-00100	BATH	1			
11		03520-00100	BOLT	1			
12		11010-51265	BOLT	31			
13		11415-40012	WASHER	16			
14		11400-20008	WASHER, spring	4			
15		11400-20008	WASHER, spring	8			
16		19040-05900	JOINT, swivel	1			
17		11010-41230	BOLT	2			
18		11400-20012	WASHER, spring	6			
19		11010-41235	BOLT	4			
20		11411-10012	WASHER	4			
21		04421-00100	PLATE	1			
22		11411-10008	WASHER	4			

PREVIEW - YOUFIXTHIS.COM

Download full manual at youfixthis.com

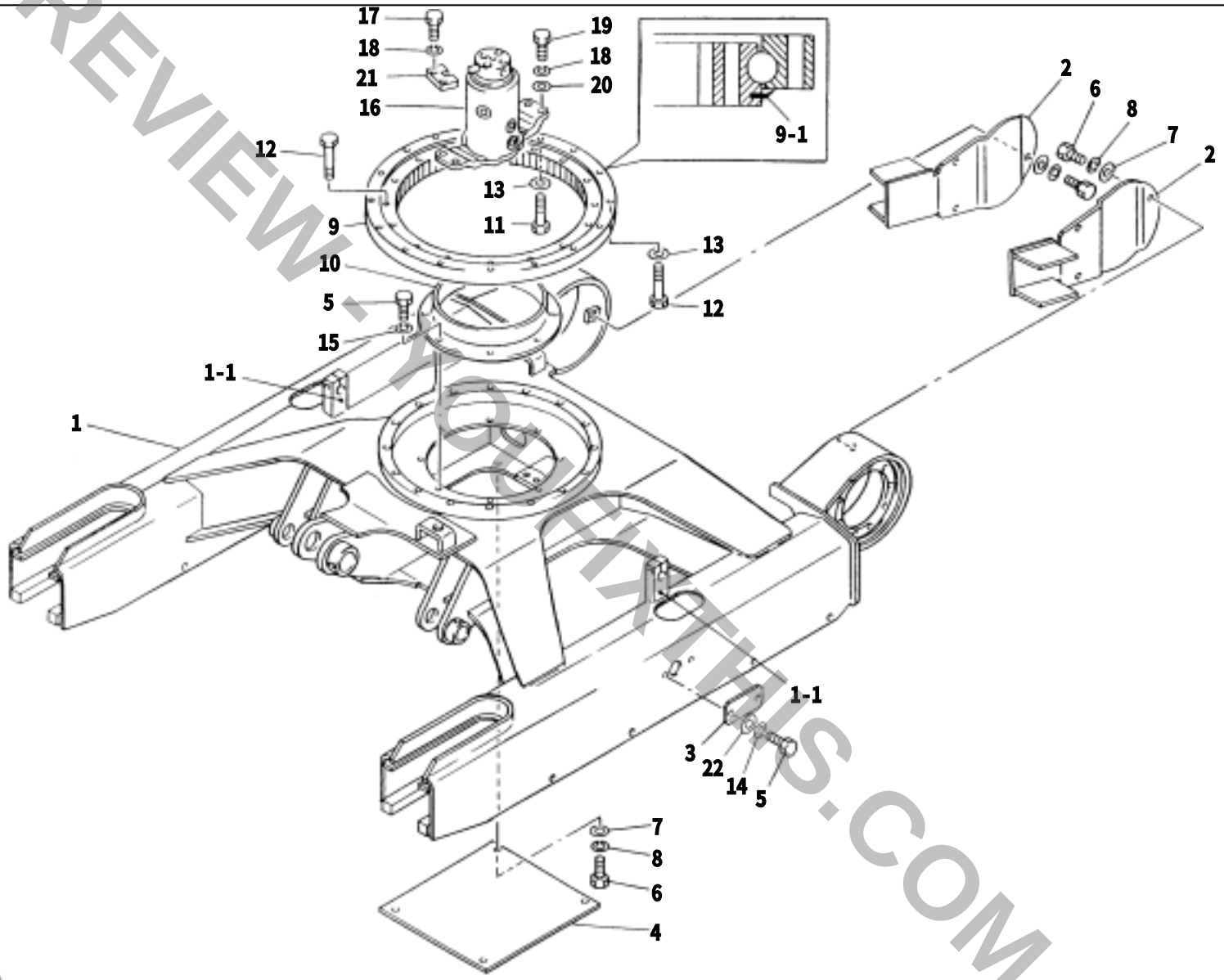

G3-01a-3-D

PREVIEW - YOUFIXTHIS.COM
Download full manual at youfixthis.com

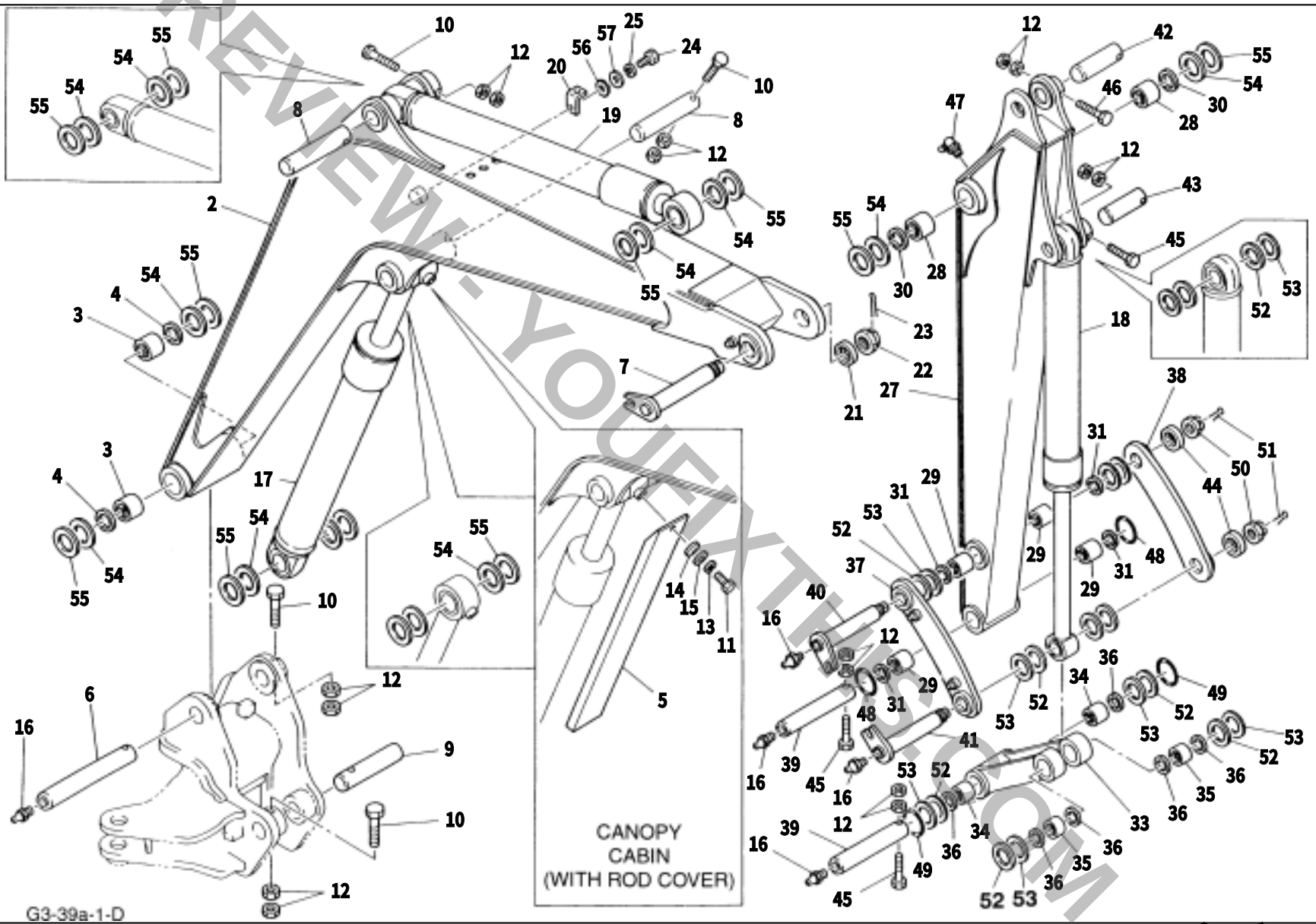

PREVIEW-YOUFIXTHIS.COM

Download full manual at youfixthis.com

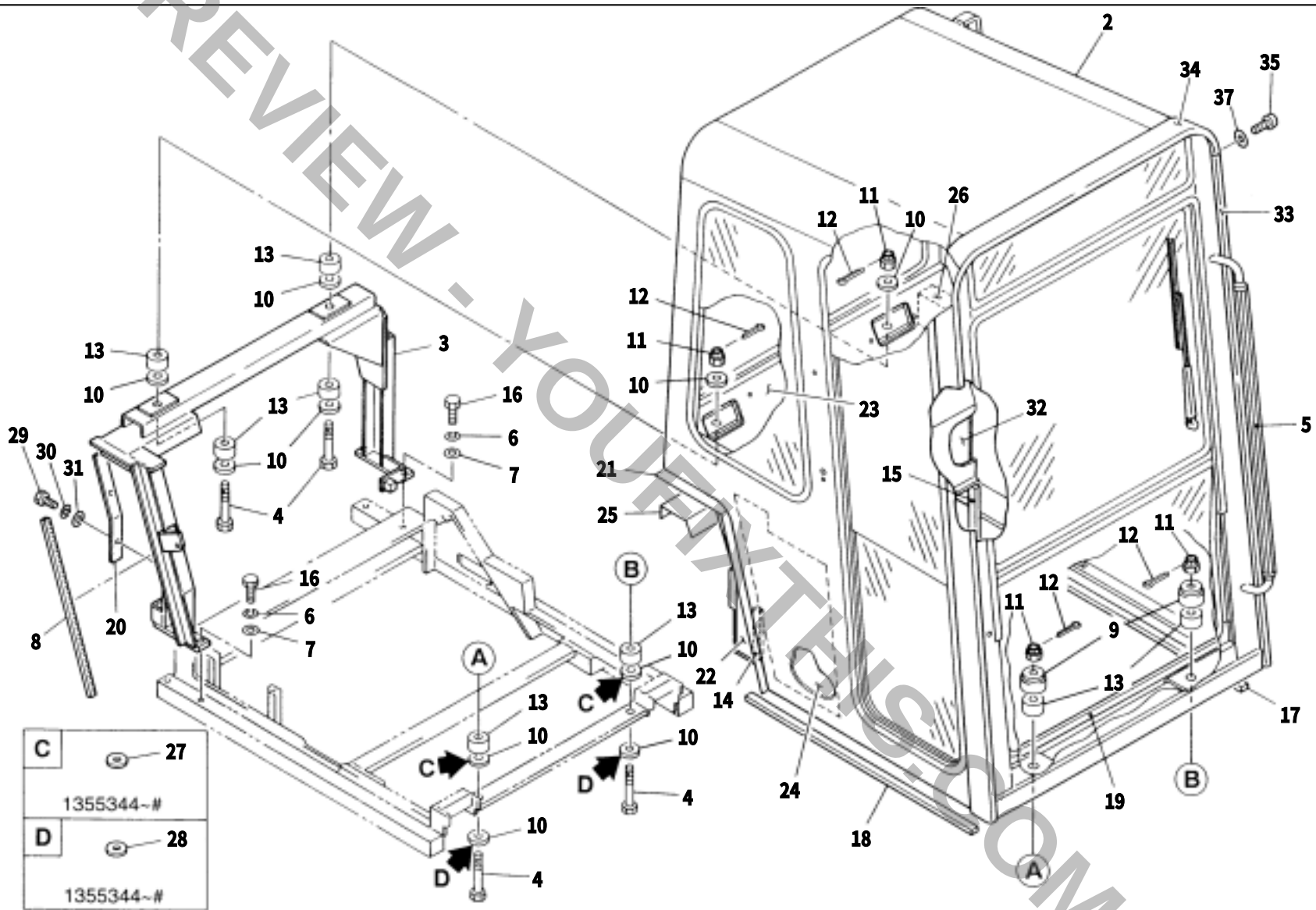

PREVIEW - YOUFIXTHIS.COM
Download full manual at youfixthis.com

PREVIEW - YOUFIXTHIS.COM

Fig. 2 ギヤケース
GEAR HOUSING

D29103-01220
D29100-01810

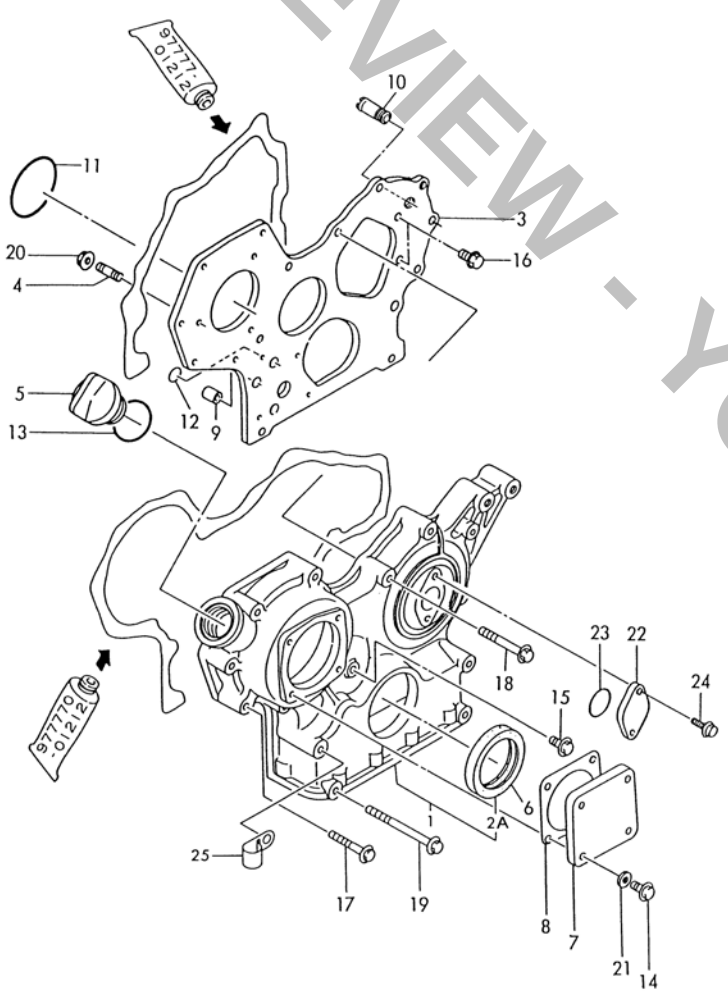

94.04.15

ﾐﾀﾞｼ REF.	ﾚﾍﾞﾙ LEV.	ﾌﾞﾋﾝﾊﾞﾝｺﾞｳ PART NO.	ﾌﾞﾋﾝ ﾒｲ	DESCRIPTION	----Q'TY(ｺｽｳ)---- (A)	(B)	(C)	(D)	(E)	(F)	I	P/U	A	R
1	.	129400-01590 (A=EXXX)	ｷﾞﾔｹｰｽ CMP (B=EXXX)	HOUSING,GEARS W/SEAL	1	1							W	
1- 1	.	719810-01500 (A=E09316)	ｷﾞﾔｹｰｽ ｼｸﾐ (B=E09356)	HOUSING ASSY, GEAR	1	1							N	
2A	..	129795-01800 (A=EXXX)	ｵｲﾙｼｰﾙ (B=EXXX)	SEAL, OIL	1	1							W	
3	.	129103-01530	ﾌﾗﾝｼﾞ(ｷﾞﾔｹｰｽ	PLATE,GEAR COVER	1	1								
4	.	121450-01560	ｳｴｺﾐﾎﾞﾙﾄ8X22	STUD M 8X 22	3	3								
5	.	124160-01751	ﾌﾀ(ﾎﾕｳｺｳ)	CAP, LUB.OIL SUPPLY	1	1								
6	.	129795-01800 (A=EXXX)	ｵｲﾙｼｰﾙ (B=EXXX)	SEAL, OIL	1	1							Z	
7	.	124240-01871	ｶﾞｸﾌﾗﾌﾀ(HO-P)	COVER, HO-P	1	1								
8	.	124240-01883	ﾊﾟｯｷﾝ(HO-P)(ﾉﾝｱｽ)	GASKET, (NON-ASB.)	1	1								(G)
9	.	129795-01950	ﾊﾟｲﾌﾟ ﾉｯｸ	PIPE, KNOCK L=18	2	2								
10	.	129122-44480	ｼﾞｮｲﾝﾄ(PT1/4)	JOINT	1	1								
11	.	121850-51960	Oﾘﾝｸﾞ(FOPﾄﾘｿｸ)	O-RING, F.I.PUMP	1	1								(G)
12	.	24311-000160	Oﾘﾝｸﾞ 1A P 16.0	O-RING 1A P-16.0	2	2								
13	.	24311-000320	Oﾘﾝｸﾞ 1A P 32.0	O-RING 1A P-32.0	1	1								(G)
14	.	26106-080122	ﾂﾊﾞﾎﾞﾙﾄ 8X 12	BOLT M 8X 12 PLATED	4	4								
15	.	26106-080162	ﾂﾊﾞﾎﾞﾙﾄ 8X 16	BOLT M 8X 16 PLATED	1	1								
16	.	26106-080202	ﾂﾊﾞﾎﾞﾙﾄ 8X 20	BOLT M 8X 20 PLATED	2	2								
17	.	26106-080452	ﾂﾊﾞﾎﾞﾙﾄ 8X 45	BOLT M 8X 45 PLATED	6	6								
18	.	26106-080552	ﾂﾊﾞﾎﾞﾙﾄ 8X 55	BOLT M 8X 55 PLATED	3	3								
19	.	26106-080852	ﾂﾊﾞﾎﾞﾙﾄ 8X 85	BOLT M 8X 85 PLATED	4	4								
20	.	26366-080002	ﾂﾊﾞﾂｷﾅｯﾄ 8	NUT M 8	3	3								
21	.	43400-500410	ｼｰﾙﾜｯｼｬｰ(ｺﾏﾙ.ﾆﾄﾘﾙ. 8	SEAL WASHER 8S	4	4								
I 21- 1	.	22190-080002 (A=E12108)	ｼｰﾙﾜｯｼｬ(ｺﾏﾙ.ﾆﾄﾘﾙ) 8 (B=E12608)	SEAL WASHER 8S	4	4							N	
22	.	121023-01550	ｶﾞｸﾌﾗﾌﾀ	COVER, BLIND	1	1								
23	.	24341-000240	Oﾘﾝｸﾞ 1A S 24.0	O-RING 1A S-24.0	1	1								
24	.	26106-060122	ﾂﾊﾞﾎﾞﾙﾄ M 6X 12	BOLT M 6X 12 PLATED	2	2								
25	.	129150-03100 (A=EXXX)	ﾌﾚｰﾄﾞﾒ(ﾌﾟﾚｰｻﾞｰﾊﾟｲﾌﾟ (B=EXXX)	RETAINER	1	1							W	

------ REMARKS (ﾋﾞｺｳ) ----------

(G) ｺｳﾓｸNO.20 ﾉ ﾐﾀﾞｼNO.1,1-1 ﾆﾃ ｾｯﾄ ﾊﾝﾊﾞｲ ｼﾏｽ.

(G) THESE PARTS ARE SOLD BY FIG.20, REF.NO.1,1-1.

Y072250

Download full manual at youfixthis.com

Index

Item	Part number	Description	Q'ty	Chan.	Serial No.
1		UNDERCARRIAGE			
2		TURNTABLE & CONTROL LEVER			
3		ENGINE & ELECTRICAL SYSTEM			
4		HYDRAULIC PIPNG & TANK			
5		COVER & CAB			
6		HOE ATTACHMENT			
7		DECAL & TOOL			
8		HYDRAULIC DEVICE			
10		ENGINE(3TN84TL-RTBY)			

PREVIEW - YOUFIXTHIS.COM

Download full manual at youfixthis.com

〔例〕 Example

符号 Item	部品番号 Part number	Description	部品名称	数量 Q'ty	互換性 Chan.	適用号機 Serial No.	備考 Remarks
1	05441-01100	BODY	ボディ	1			
2	05441-01300	SHAFT, drum	ドラムシャフト	1			
3	05441-01400	DISK	ディスク	1			

部品番号
その部品に付けられた固有の番号です。販売されない部品は、部品番号の前に「×」印を付けてあります。

Part Number
This is the number which is designated to each type of part. Parts which are not for sale have "×" in front of the part number.

部品名称
その部品名称です。組立品を構成する部品は、部品名称の前に「★」印を付け、組立品の次に続けて記載されており、親子関係の子部品あるいは孫部品を表します。また、右側は(R)、左側は(L)でそれぞれ示します。

Description
This is the name given to each part. Those parts which constitute an assembly item are indicated by a "★" in front of the name of the part. In the listing the assembly comes first, with the sub parts, and sub-sub-parts following. The right hand side is indicated by an (R.H.) and the left hand side indicated by an (L.H.).

〔例〕 Example

符号 Item	部品番号 Part number	Description	部品名称	数量 Q'ty	互換性 Chan.	適用号機 Serial No.	備考 Remarks
0	19000-16400	CYLINDER ASSY	シリンダアッシ	2			
0-1	19000-16499	★KIT, seal	★シールキット	1			
1	×14100-00802	★★packing, piston	★★ピストンパッキング	1			
2	×14105-60759	★★PACKING	★★パッキング	1			
3	×14111-00060	★★SEAL, dust	★★ダストシール	1			
4	×14113-00803	★★RING, back-up	★★バックアップリング	1			

上記の例で「0-1」は「0」の子部品となり、「1～4」の部品は、「0-1」に対しては子部品、「0」の部品に対して孫部品となります。

In the above example "0-1" is a sub part of "0" and "1", "2", "3", and "4" are sub parts of "0-1" and sub-sub parts of "0".

個数
その部品が使用されている「1台分の個数」が記載されています。ただし、組立品の構成部品は、その組立品の1組分の個数が記載されています。また、「AR」と記載されている場合は任意に「選択使用」の意味を示し、個数も必要数使用の意味を示します。また、油圧機器詳細の項では、その油圧機器1セット分の内容が記載されています。

Q'ty
This indicates the quantity of the parts used in one machine. However, when it comes to the consitiuent parts of an assembly item the quantity used in that particular assembly item will be shown.
When there is an " AR " written, this means that the use of the part is optional, and quantity then indicates the amount required on those occasion when the part is to be used. And when it comes to the details of hydraulic devices, the constituents of 1 set of hydraulic devices is shown.

PREVIEW - YOUFIXTHIS.COM
Download full manual at youfixthis.com

BOOM SWING

Item		Part number	Description	Q'ty	Chan.	Serial No.	Remarks
1		04531-02100	BRACKET ASSY	1			
2	X	04531-02200	· BRACKET	1			
3		00024-00023	· BUSHING	1			
4		04331-02300	COVER	1			
5		01031-13200	WASHER	1			
6		00119-07003	PIN	1			
7		00115-17002	PIN	1			
8		00115-74007	PIN	1			
9		00016-94002	PIN	1			
10		04231-02300	PLATE	1			
11		12251-21020	SPRING, conical	1			
12		04231-02500	PLATE	1			
13		15600-01900	NIPPLE, grease	1			
14		11010-41245	BOLT	2			
15		11001-41010	BOLT	1			
16		11030-41085	BOLT	2			
17		11000-40820	BOLT	2			
18		11302-40010	NUT	4			
19		11400-20012	WASHER, spring	2			
20		11400-20008	WASHER, spring	2			
21		19000-56100	CYLINDER, swing	1			
22		04431-02400	WASHER	1			t=3.5mm
23		15150-10041	ELBOW	1			
24		04331-01300	PLATE	1			option
25		11110-41275	SCREW, cap	2			option
26		15156-00201	ADAPTOR	1			
27		14200-10140	O-RING	2			
28		03539-00100	PLATE	1			for bucket(800W)
29		11110-41275	SCREW, cap	2			for bucket(800W)
30		00036-00058	SHIM	AR			t=0.2mm
		00036-00059	SHIM	AR			t=0.5mm
		00030-45000	SHIM	AR			t=1.0mm
		00030-45001	SHIM	AR			t=1.6mm

PREVIEW - YOUFIXTHIS.COM

Download full manual at youfixthis.com

ENGINE & ACCESSORIES 1

Item	Part number	Description	Q'ty	Chan.	Serial No.	Remarks
1	03740-01100	FOOT, engine	1			
2	03740-01200	FOOT, engine	1			
3	03540-01300	BRACKET	1			
4	03640-10100	ABSORBENT	1			
5	03640-11100	ABSORBENT	1			
6	03740-01300	ABSORBENT	1			
7	04340-04100	FOOT, engine	1			
8	04340-04200	FOOT, engine	1			
9	04340-04700	BRACKET	1			
10	04340-04600	STOPPER	2			
11	04440-02100	BRACKET	1			
12	00036-08252	WASHER	7			
13	03740-01400	STOPPER	2			
14	03740-01500	BRACKET	2			
15	16510-44003	RUBBER, cushion	2			
16	16510-14003	RUBBER, cushion	3			
17	16510-40002	RUBBER, cushion	2			
18	17024-30280	CABLE, earth	1			
19	11000-40816	BOLT	2		1355001~1355577	
	11000-40816	BOLT	6		1355578~	
20	11000-40825	BOLT	4			
21	11000-41016	BOLT	2			
22	11000-41025	BOLT	14			
23	11000-41030	BOLT	4			
24	11000-41035	BOLT	8			
25	11300-40012	NUT	12			
26	11400-20008	WASHER, spring	11		1355001~1355577	
	11400-20008	WASHER, spring	15		1355578~	
27	11400-20010	WASHER, spring	32			
28	11400-20012	WASHER, spring	4			
29	11300-40008	NUT	7			
30	11403-30010	WASHER	2			
31	11411-10008	WASHER	4		1355001~1355577	
	11411-10008	WASHER	8		1355578~	

PREVIEW - YOUFIXTHIS.COM

Download full manual at youfixthis.com

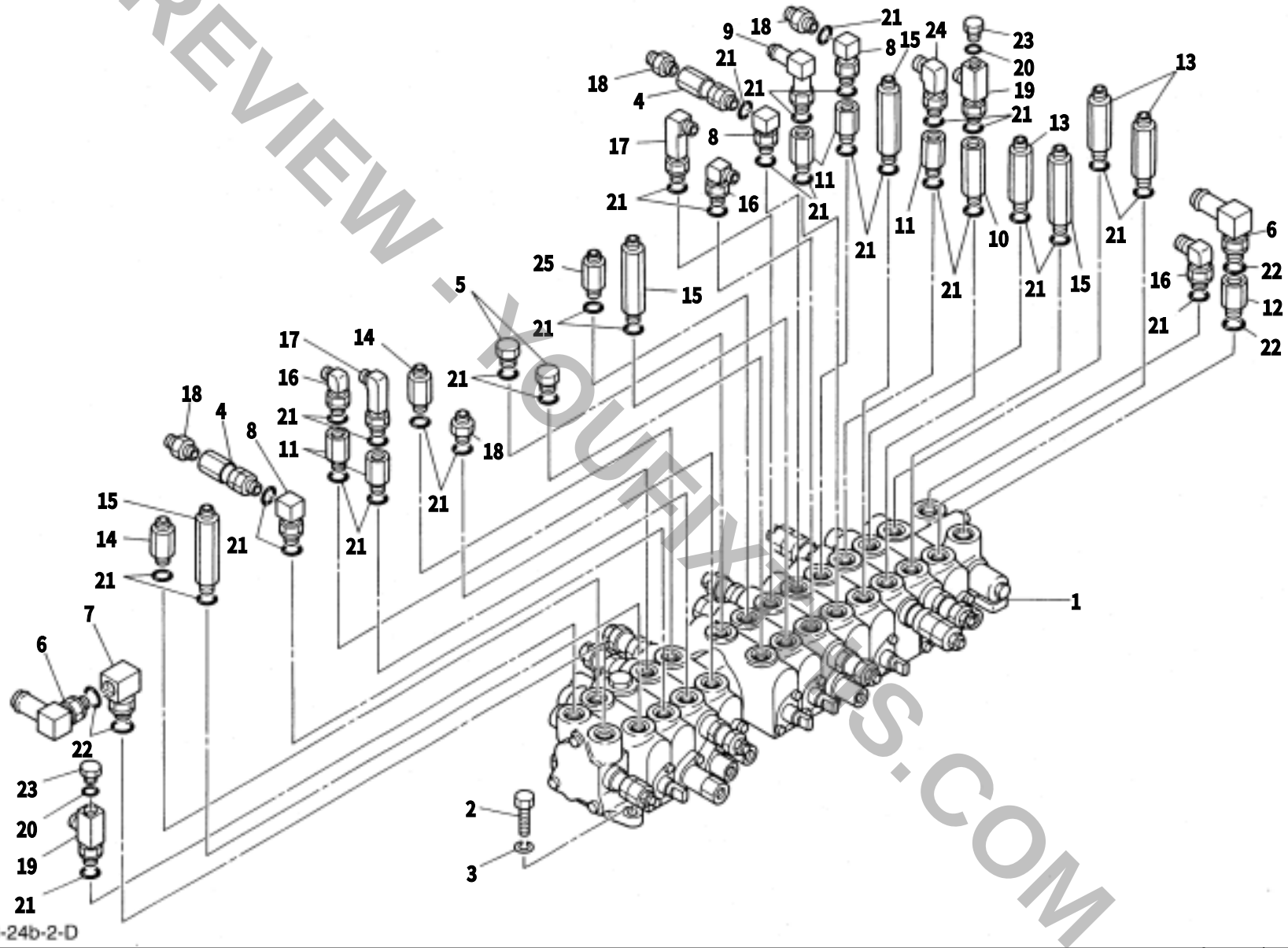

PREVIEW - YOUFIXTHIS.COM
Download full manual at youfixthis.com

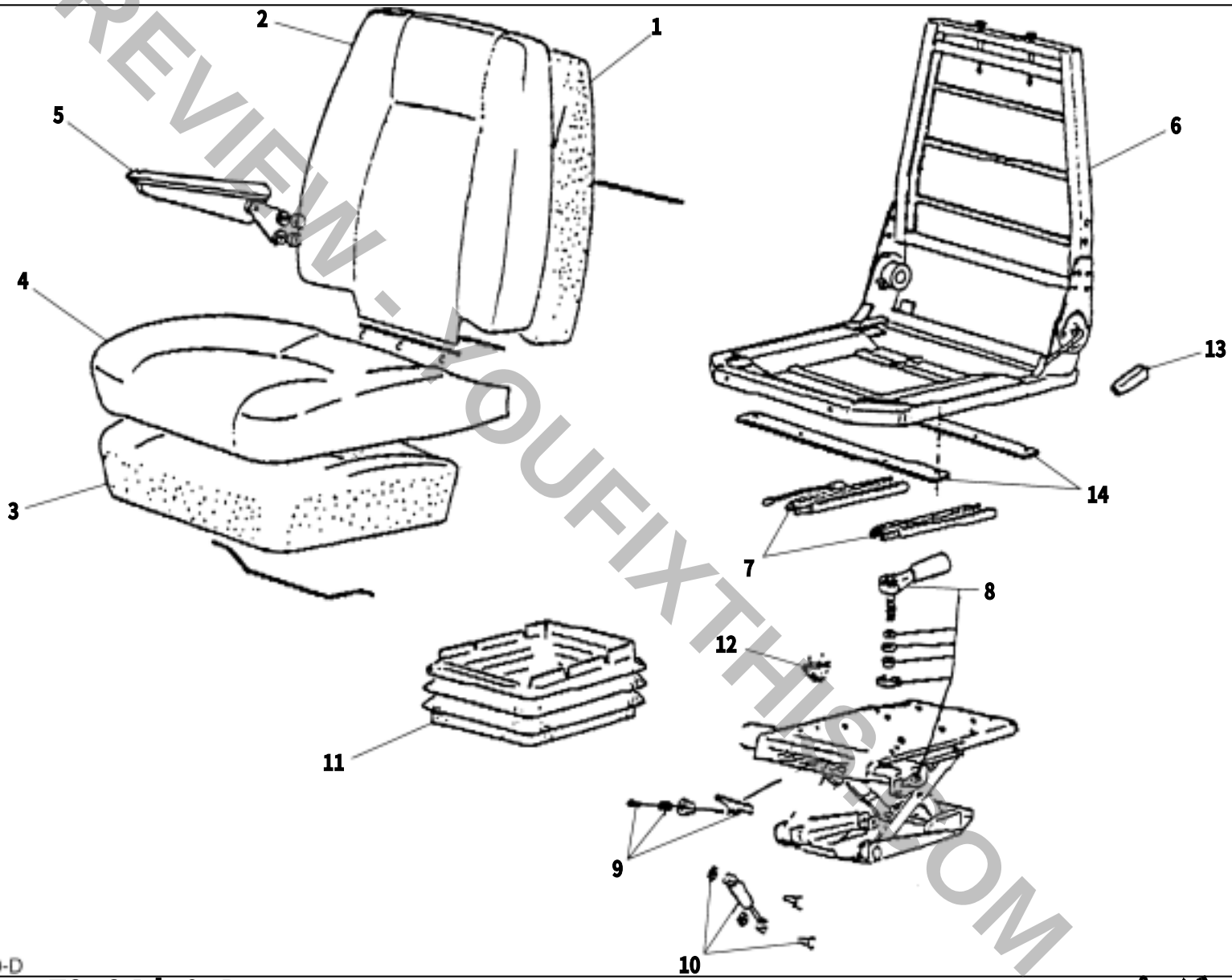

F3-34d-0-D

PREVIEW - YOUFIXTHIS.COM
Download full manual at youfixthis.com

HEATER
(for Japan)

Item	Part number	Description	Q'ty	Chan.	Serial No.	Remarks
1	03645-90000	HEATER ASSY	1			
2	19115-08040	· HEATER	1			
3	19115-02200	· ADAPTOR	1			
4	19115-02300	· VALVE	1			
5	19115-00500	· CLAMP	4			
6	19115-41800	· HOSE	2			sold by the meter
7	15313-45110	· PROTECTOR	1			sold by the meter
8	00972-10300	· GUARD	1			
9	00073-00019	CLAMP	1			
10	11000-40816	BOLT	4			
11	11400-20008	WASHER, spring	4			
12	00036-08252	WASHER	4			
13	11403-30008	WASHER	1			
14	15085-10003	ADAPTOR	1			
15	15081-10003	ELBOW	1			
16	16522-31250	BAND	4			
17	19115-03400	SWITCH	1			

PREVIEW YOUFIXTHIS.COM

Download full manual at youfixthis.com

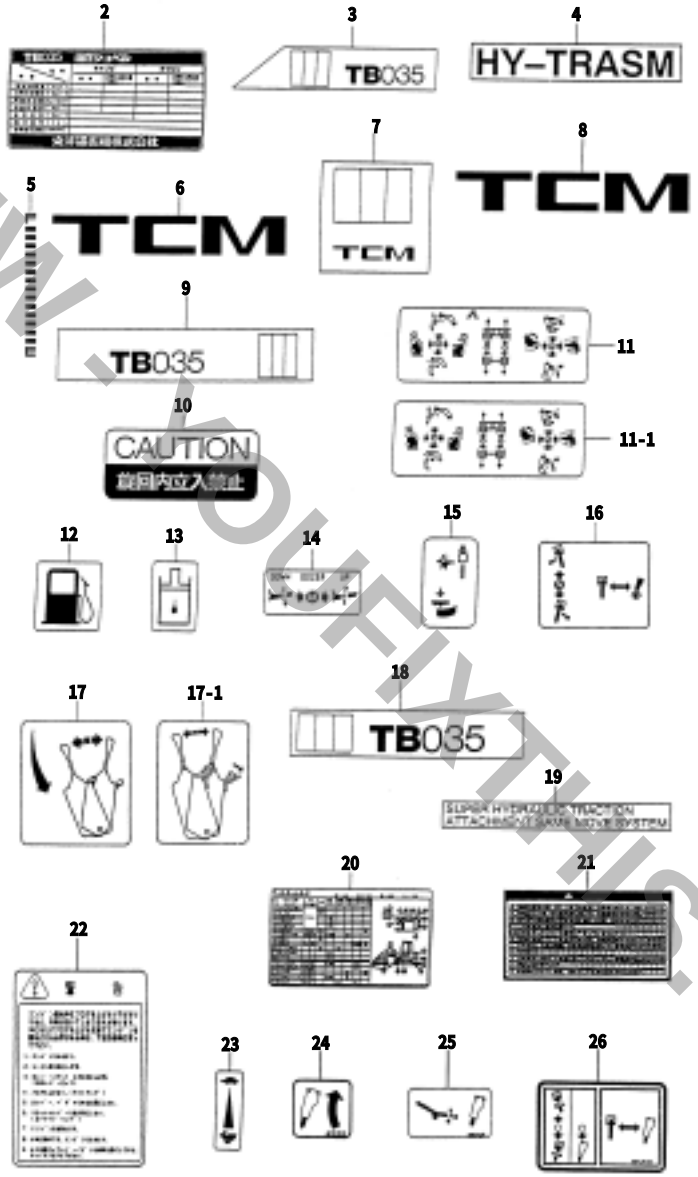

PREVIEW - YOUFIXTHIS.COM

Download full manual at youfixthis.com

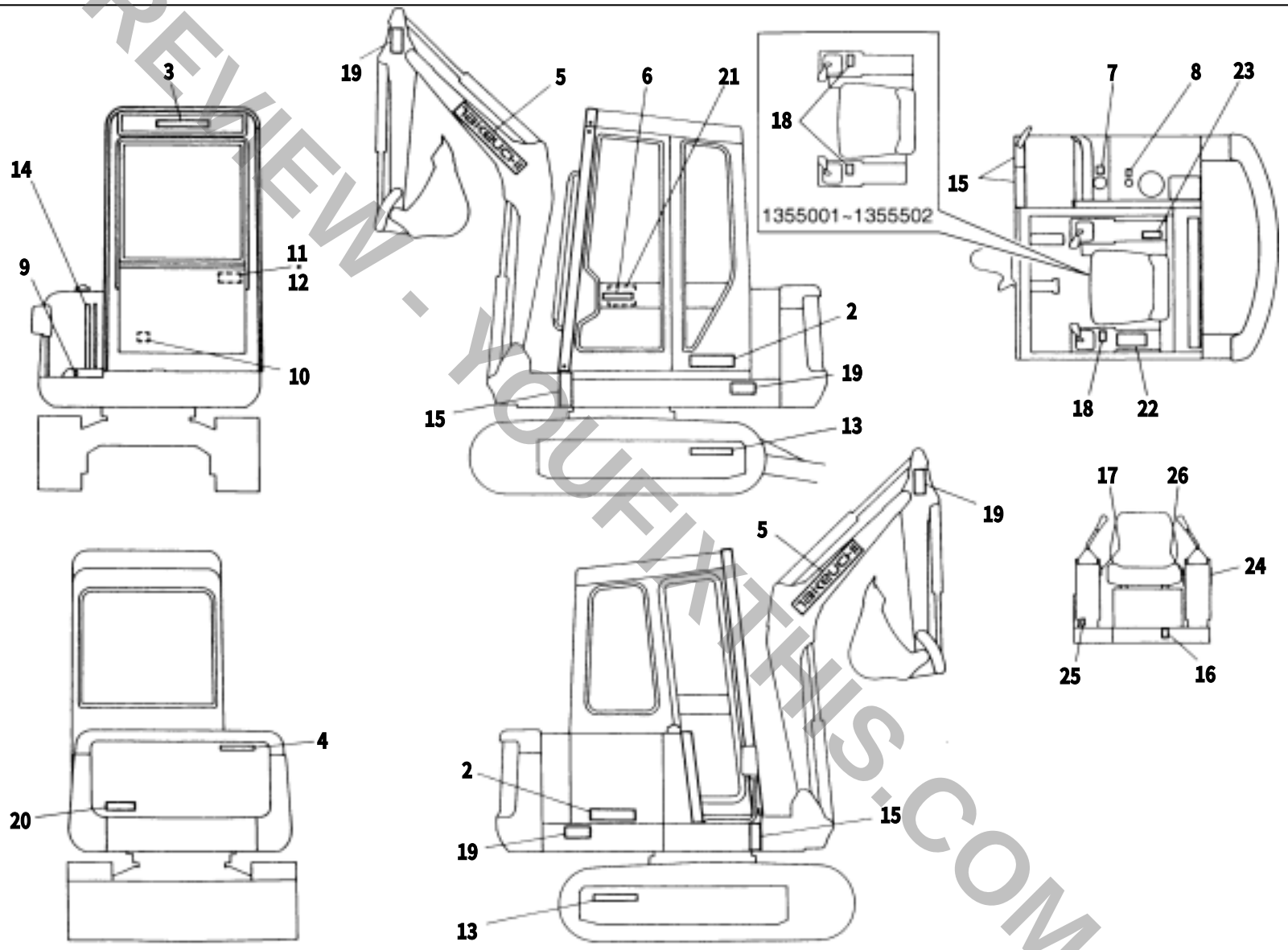

E3-43k-0-D

PREVIEW - YOUFIXTHIS.COM
Download full manual at youfixthis.com

PAINTED COLOR
(for Japan)

Item	Part number	Description	Q'ty	Chan.	Serial No.	Remarks
1	19190-60140	BLUE, marine	1			
	19190-69140	BLUE, marine	1			spray
2	19190-60161	WHITE	1			
	19190-69161	WHITE	1			spray
3	19190-60103	BROWN, gray	1			
	19190-69103	BROWN, gray	1			spray
4	19190-60101	GRAY, brown	1			
	19190-69101	GRAY, brown	1			spray
5	19190-60053	BLACK	1			
7	19190-60090	ORANGE YELLOW	1			FITTING, grease

PREVIEW - YOUFIXTHIS.COM

Download full manual at youfixthis.com

BOOM CYLINDER
(canopy)

Item		Part number	Description	Q'ty	Chan.	Serial No.	Remarks
1		19000-54700	CYLINDER ASSY	1			
2		19000-54799	· KIT, seal	1			
3	X	19000-50932	· · PACKING, piston	1			
4	X	14201-10750	· · O-RING	1			
5	X	14201-10850	· · O-RING	1			
6	X	14201-10800	· · O-RING	1			
7	X	14211-30800	· · RING, back-up	2			
8	X	19000-47233	· · SEAL, dust	1			
9	X	19000-05912	· · PACKING, rod	1			
10		19000-50931	· RING, wear	2			
11		19000-54727	· CONNECTOR	1			
12		19000-54726	· STOPPER	1			
13		19000-49426	· STOPPER	1			
14		19000-50216	· RING, cushion	1			
15		19000-49415	· SPACER	1			
16		19000-54707	· TUBE	1			
17		19000-54706	· PISTON	1			
18		19000-54105	· BEARING, cushion	1			
19		19000-54774	· RETAINER	1			
20		19000-54703	· COVER, rod	1			
21		19000-45602	· BUSHING	2			19000-12102
22		19000-54701	· ROD, piston	1			
23		15600-01675	· NIPPLE, grease	1			
24		15600-01000	· NIPPLE, grease	1			
25		14322-00045	· SEAL, dust	4			
26		11210-00608	· SET-SCREW	1			
27		13900-10250	· BALL, steel	1			
28		13330-04530	· BUSHING	1			

PREVIEW - YOUFIXTHIS.COM

Download full manual at youfixthis.com

SLEW MOTOR (2/3)
(with parking brake)

Item		Part number	Description	Q'ty	Chan.	Serial No.	Remarks
1		19129-01700	REDUCTION	1			reduction sec.
2		19129-00599	· KIT, seal	1			
3	X	14203-10261	· · O-RING	1			
4	X	14201-00450	· · O-RING	1			
5	X	19129-00507	· · SEAL, oil	1			
6	X	14210-01100	· · O-RING	1			
7		19129-00501	· · CASE	1			
8		19129-00502	· · CASE	1			
9		11100-51225	· · SCREW, cap	2			
10		19129-00505	· · BEARING, ball	1			
11		19129-00506	· · BEARING	1			
12		19129-00509	· · SHAFT ASSY	1			
13	X	*****-*****	· · · HOLDER	1			
14	X	*****-*****	· · · SHAFT	1			
15	X	*****-*****	· · · BOLT	3			
16		19129-00510	· · GEAR, planetary	3			
17		19120-01715	· · CAGE&ROLLER	3			
18		19129-00512	· · SHAFT, planetary	3			
19		19120-01016	· · PLATE, thrust	6			
20		12130-00414	· · PIN, spring	3			
21		19129-01615	· · COLLAR	1			
22		19129-00517	· · GEAR, drive	1			
23		12210-00082	· · RING, snap	1			
24		19129-01120	· · PINION	1			
25		19129-01621	· · PLATE	1			
26		19129-00522	· · WASHER, lock	1			
27		11000-50820	· · BOLT	2			
28		15018-10002	· · PLUG	1			
29		15018-10004	· · PLUG	1			
30		19129-00526	· · PLUG	1			
31		11000-51230	· · BOLT	4			
32		11400-10012	· · WASHER, spring	4			
33		19129-00508	· · GAUGE	1			

PREVIEW - YOUFIXTHIS.COM

Download full manual at youfixthis.com

No.	Designation	Explanation
①	Location No.	Location No. of a microfiche which contains this list. The parenthesized refers to Location No. of the corresponding section index.
②	Parts Catalog No.	Serial No. of every Parts Catalog.
③	Group No.	Running No. given per group of related parts.
④	Group Name	Designation given per group of related parts.
⑤	Date of Processing	Date on which this list for Parts Catalog is printed out.
⑥		Model name of a product (of which parts are) mentioned in the pertinent Parts Catalog. A perenthesized symbol corresponds to a parenthesized symbol appearing under the "Q'TY" column of Ref. No.12.

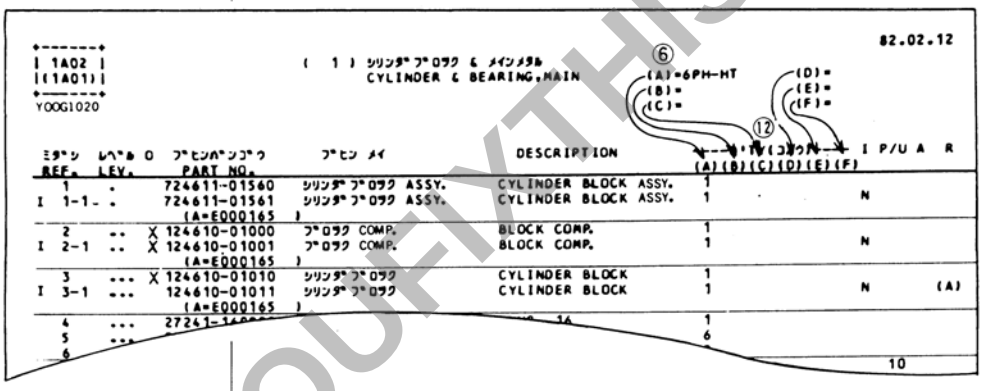

⑦	Ref. No.	Number to relate a number appearing in illustration (given opposite to the list) with corresponding Part No.
⑧	Level	Assembly-component relation (level) of an assembly part expressed by a number of dots (·).
⑨	Order Division	A part of which Part Number is prefixed with alphabet X shall not be sold. In this case, please place your order of this part and its related parts by parental Part Number ——. Complete Part Number or Assy. Part Number.
⑩	Part No.	Part Number specified for every part.
⑪	Part Name	Description of a part, mainly Part Name but may include dimensions.
⑫	Quantity (Q'ty)	Quantity used of parts per Ref. No.

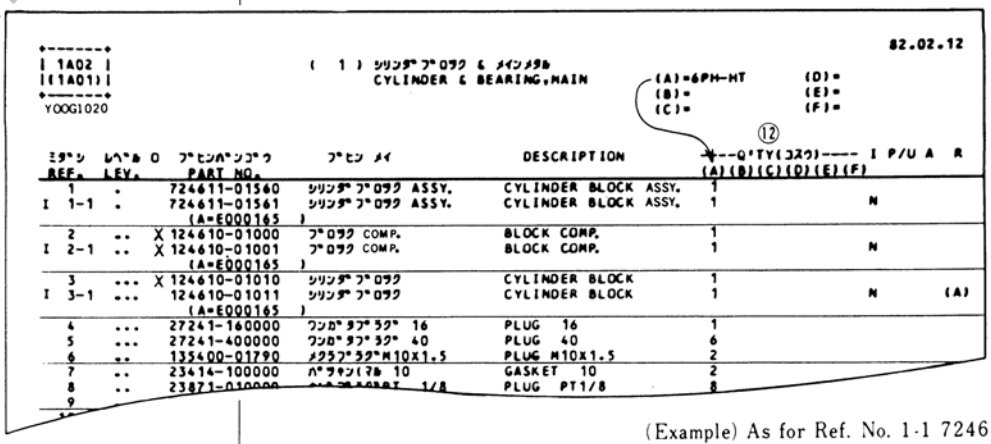

(Example) As for Ref. No. 1-1 724611-01561, this part is used in the 6PH-HT.
(1: Quantity used of parts)

PREVIEW - YOUFIXTHIS.COM

Download full manual at youfixthis.com

PREVIEW ONLY

You're viewing 18 of 392 pages

The full manual includes:

- All 392 pages, complete
- Searchable PDF (find any keyword)
- No watermarks
- Instant download
- Print-ready quality

GET FULL MANUAL NOW

Takeuchi TB035 Parts Catalog

Scan or click anywhere
youfixthis.com

Click anywhere on this page to get the full manual