Lever Pattern (ISO Pattern)

⚠ WARNING

- **Be careful to check which pattern of lever control arrangement you are operating with before beginning operations.**
- **The explanations in this manual are for the ISO pattern.**

⟨ISO⟩

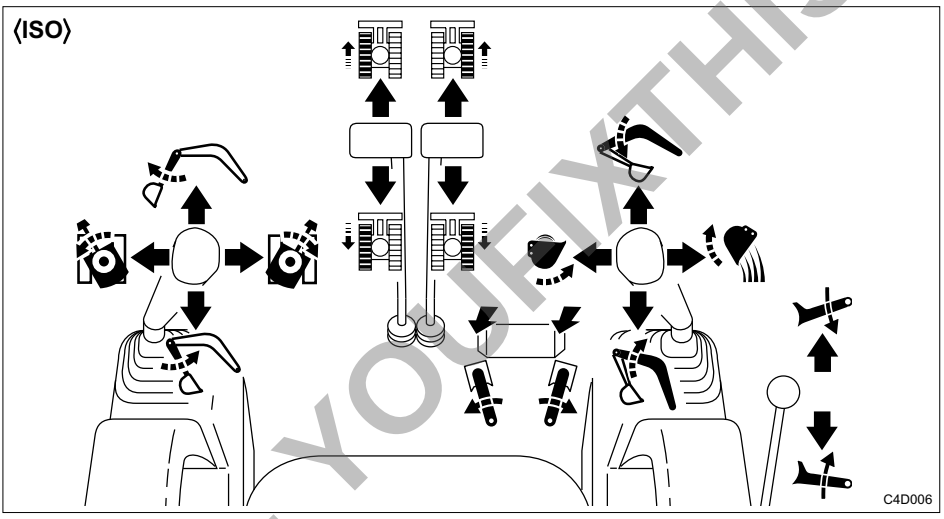

	Left Crawler Forward		Right Crawler Forward
	Left Crawler Reverse		Right Crawler Reverse
	Arm Out		Boom Lower
	Arm In		Boom Raise
	Upperstructure Slew Left		Bucket Load
	Upperstructure Slew Right		Bucket Dump
	Boom Swing Left		Dozer Blade Lower
	Boom Swing Right		Dozer Blade Raise

REVIEW - YOUFIXTHIS.COM

Download full manual at youfixthis.com

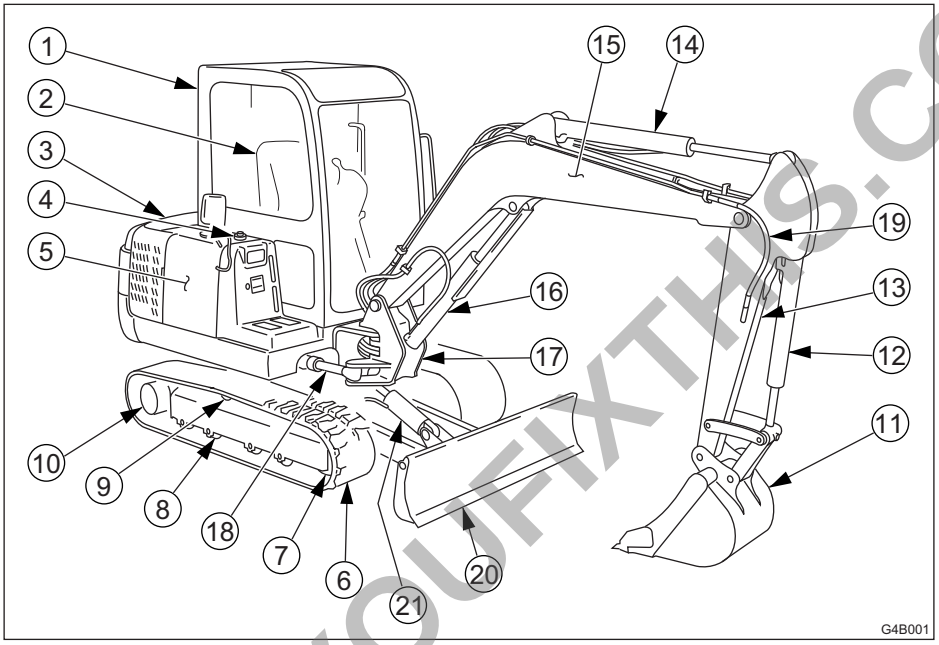

Upperstructure
1. Cab
2. Seat
3. Engine hood
4. Fuel tank
5. Hydraulic tank

Undercarriage
6. Crawler belt
7. Idler
8. Track roller
9. Carrier roller
10. Travel motor

Working equipment
11. Bucket
12. Bucket cylinder
13. Arm
14. Arm cylinder
15. Boom
16. Boom cylinder
17. Boom bracket
18. Swing cylinder
19. Auxiliary hydraulic lines
20. Dozer blade
21. Blade cylinder

REVIEW - YOUFIXTHIS.COM

Download full manual at youfixthis.com

Tightening Torques

Nuts and Bolts (for ISO strength category 10.9)

Tighten nuts and bolts at the torques shown on the table below, unless otherwise specified in the text.

- Tightening torques when mounting plastic covers differ from the values on the table below. Consult a Takeuchi sales or service outlet. Tightening too strongly will break the cover.
- When replacing nuts and bolts, replace them with nuts and bolts of the same size and standards.
- Tighten nuts and bolts alternately (top, bottom, left then right) or in 2 or 3 times so that they are tightened uniformly.

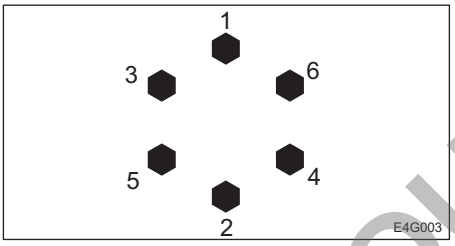

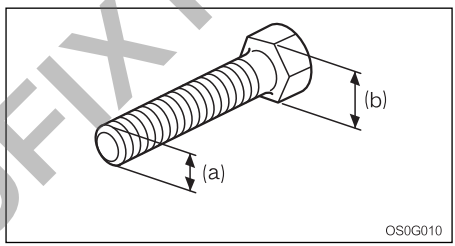

Thread	Head width (b)	Size (a) X Pitch	Torque	
			General Connection Points	
	mm	mm	N·m	ft-lb
Coarse	10	M6 X 1.0	9.8 ± 0.5	7.2 ± 0.4
	12, 13	M8 X 1.25	22.6 ± 1.1	16.6 ± 0.8
	14, 17	M10 X 1.5	47.1 ± 2.4	34.7 ± 1.7
	17, 19	M12 X 1.75	83.4 ± 4.1	61.5 ± 3.0
	19, 22	M14 X 2.0	134.4 ± 6.7	99.1 ± 4.9
	22, 24	M16 X 2.0	207.9 ± 10.4	153.3 ± 7.7
	27, 30	M20 X 2.5	410.9 ± 20.5	303.1 ± 15.1
Fine	12, 13	M8 X 1.0	24.5 ± 1.2	18.1 ± 0.9
	14, 17	M10 X 1.25	50 ± 2.5	36.9 ± 1.8
	17, 19	M12 X 1.5	87.3 ± 4.3	64.4 ± 3.2
	19, 22	M14 X 1.5	135.3 ± 6.8	99.8 ± 5.0
	22, 24	M16 X 1.5	220.6 ± 11	162.7 ± 8.1
	27, 30	M20 X 1.5	452.1 ± 22.6	333.4 ± 16.6

REVIEW - YOUFIXTHIS.COM

Download full manual at youfixthis.com

TB125

TYPE			CANOPY	CAB
MASS				
Machine mass kg (lb.) (not including operator)	Rubber crawlers		2675 (5895)	2790 (6150)
	Steel crawlers		2735 (6030)	2850 (6285)
PERFORMANCE				
Bucket capacity m^3 (cu.ft.) (standard bucket)	Heaped		0.068 (2.4)	
	Struck		0.051 (1.8)	
Slew speed min^{-1} (rpm)			9.6 (9.6)	
Travel speed km/h (mph)	Rubber crawlers	1st	2.7 (1.68)	
		2nd	4.8 (2.98)	
	Steel crawlers	1st	2.6 (1.62)	
		2nd	4.7 (2.92)	
Gradeability (degrees)			30	
Ground pressure kPa (psi)	Rubber crawlers		28.1 (4.08)	29.3 (4.25)
	Steel crawlers		29.4 (4.27)	30.7 (4.45)
Noise level dB(A)	Sound-power level		L_{WA} 94*	L_{WA} 94*
	Sound-pressure level		L_{pA} 78	L_{pA} 77
ENGINE				
Manufacturer and model			Yanmar 3TNE82A-TB (Serial No. 12510003 ~ 12510451)	
			Yanmar 3TNE82A-ETB (Serial No. 12510452 ~)	
Rated output	kW / min^{-1} (hp / rpm)		16.8 / 2300 (22.5 / 2300)	
Displacement	ml (cu.in.)		1330 (81.2)	
Starter	V – kW		12 – 2.0	
Alternator	V – kW		12 – 0.48	
Battery	V – A·h		12 – 64	

* Serial No. 12512750~

Download full manual at youfixthis.com

⚠ WARNING

The machine may roll or tip over or fall while loading or unloading it. Take the following precautions:

- **Select a firm, level surface and keep sufficient distance from road shoulders.**
- **Use loading ramps of adequate strength and size. Maintain the slope of loading ramps within 15 degrees.**
- **Keep the truck bed and loading ramps clean of oil, clay, ice, snow, and other materials which can become slippery. Clean the tracks.**
- **Never change course on the ramp.**
- **Do not slew (swing) on ramps. The machine may tip over.**
- **When slewing (swinging) on the truck bed, do so slowly as the footing can be unstable.**

When loading or unloading the machine, be sure to use ramps and following the procedure below.

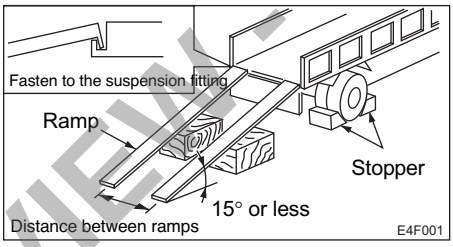

1. Apply the truck's parking brake and place stoppers against its tires.
2. Fasten the ramps securely to the truck bed so that they will not come off. Set the ramps to an angle of 15° or less.
3. Line up the center of the truck bed with the center of the machine and the center of the ramps with the center of the crawlers.
4. Make sure the dozer blade does not hit the ramps.
5. Lower the hoe attachment as much as possible, making sure it will not hit the truck.
6. Lower the engine speed with the throttle lever.

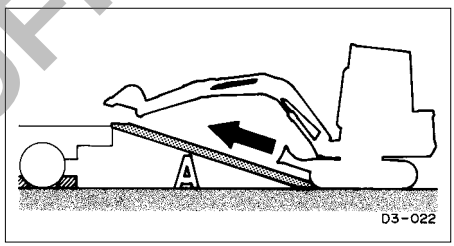

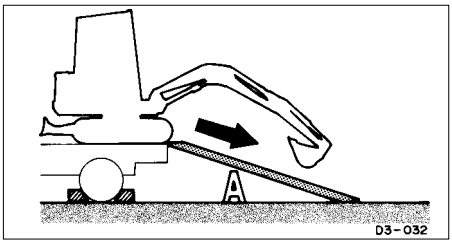

7. Determine the direction on the ramps, then slowly travel up or down the ramps in 1st speed (low speed), following the signals of a flagman.
8. Load the machine properly at the prescribed position on the bed.
   Refer to page 89 "Transporting Posture".

REVIEW - YOUFIXTHIS.COM

Download full manual at youfixthis.com

Attachment Combination Table

Below is the bucket combination table for when standard arms, long arms and telescopic arms are installed.
Heed this table.

⚠ WARNING

- **Consult with a Takeuchi dealer before installing optional attachments.**
- **Do not use attachments that have not been approved by Takeuchi or a Takeuchi dealer. Doing so may compromise safety or adversely affect the machine's operation or service life.**
- **Takeuchi will not be held responsible for any injuries, accidents or damage to products caused by the use of a non-approved attachment.**
- **TB125**
  The swing stopper must be mounted when a bucket wider than a 490W bucket is mounted.
- **TB135**
  The swing stopper must be mounted when a bucket wider than a 630W bucket is mounted.

Failure to mount the swing stopper may result in the bucket hitting the machine body.

√ : Usable
Δ : Usable for light operations (digging and loading operations with dry, loose or mud)
– : Not usable

Total bucket weight = Weight of bucket + Weight of full bucket load (specific gravity : 1.8)

<TB125>

Bucket	Rated Capacity m^3 (cu.yd.)	Bucket cutting width mm (inch)	Standard Arm 1135 mm (45 in.)	Long Arm 1445 mm (57 in.)	Telescopic Arm 1150 to 1740 mm (45 to 69 in.)
300W	0.043 (0.056)	300 (11.8)	√	√	√
330W	0.044 (0.058)	330 (13.0)	√	√	√
460W (S.T.D.)	0.068 (0.089)	460 (18.1)	√	√	—
490W	0.075 (0.098)	490 (19.3)	√	Δ	—
530W	0.084 (0.110)	530 (20.9)	√	Δ	—
600W	0.104 (0.136)	600 (23.6)	√	Δ	—
3-Hole Bucket	0.093 (0.121)	460 (18.1)	√	Δ	—
Total bucket weight = Within 134kg (295 lb.) for Telescopic Arm		Within 600 (23.6)	√	√	√
Total bucket weight = Within 263kg (580 lb.)		Within 600 (23.6)	√	Δ	—
Hydraulic Breaker (TKB-101)			√	√	—

Download full manual at youfixthis.com

Operating the Travel Levers

⚠ WARNING

- **Never allow anyone to enter the slew (swing) radius and machine path.**
- **Signal your intention to move by sounding the horn.**
- **There are blind spots to the rear of the machine.**
  If necessary, swing the cab around before backing up to check that the area is safe and clear.

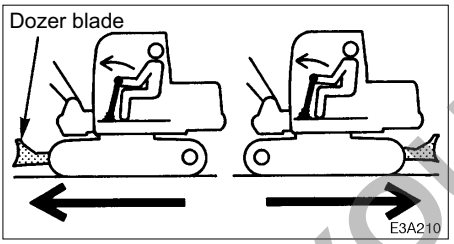

- **Before operating the travel levers, check to make sure that the dozer blade is to the front of the operator's seat. BE AWARE that when the dozer blade is to the rear of the operator's seat, the travel levers operate in the opposite direction to when the dozer blade is in the front.**
- **Remove any obstacles in the machine's path.**

Traveling Forward and Backward

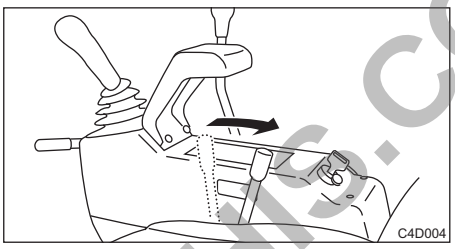

1. Pull the throttle lever and increase the engine speed.

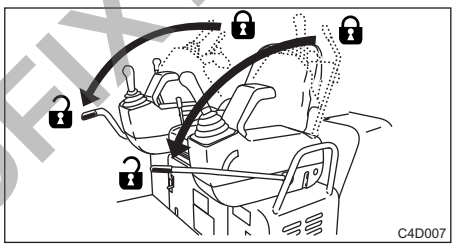

2. Set the safety lock lever to the released position.

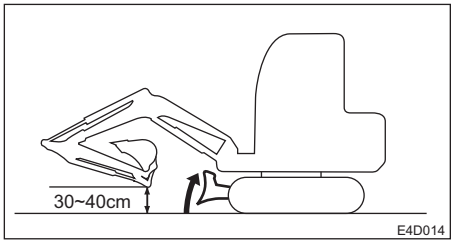

3. Fold the hoe attachment and lower it to 30 to 40 cm(12 to 16 in.) above the ground.
4. Lift the dozer blade.

REVIEW - YOUFIXTHIS.COM

Download full manual at youfixthis.com

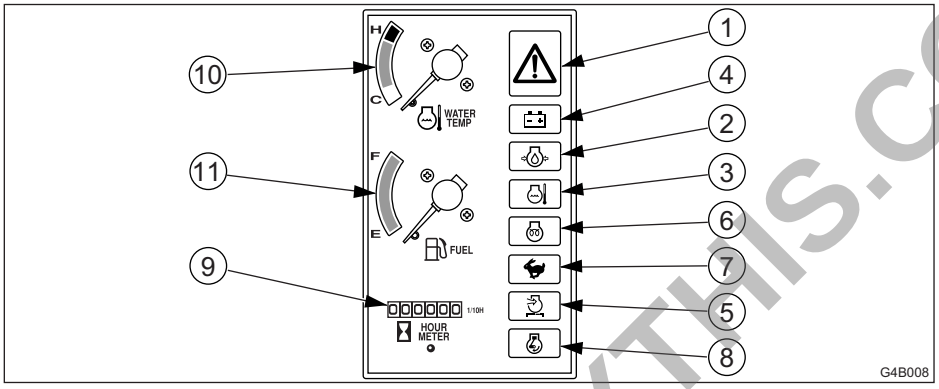

Warning Lamps

IMPORTANT: If a warning lamp flashes and an alarm is sounded, stop all operations immediately and inspect and maintain the appropriate part.

Refer to page 141 “Troubleshooting”.

1. Engine Emergency Lamp



This lamp flashes and an alarm is sounded if the engine oil pressure drops or the coolant temperature rises abnormally while the engine is running. After approximately 15 seconds, the engine stops or low idling automatically.

2. Engine Oil Pressure Warning Lamp



This lamp flashes and an alarm is sounded if the lubricant oil pressure drops abnormally while the engine is running.

3. Coolant Temperature Warning Lamp



This lamp flashes and an alarm is sounded if the engine coolant temperature rises abnormally while the engine is running.

4. Battery Charge Warning Lamp



This lamp flashes and an alarm is sounded if a problem arises in the charging system while the engine is running.

5. Air Cleaner Warning Lamp



This lamp flashes and an alarm is sounded if the air cleaner filter is clogged while the engine is running.

Indicators

6. Glow Lamp



This lamp turns off when engine preheating is completed.

7. Travel Speed Lamp



This lamp lights when the travel speed is set to 2nd (high speed).

8. Decel. Lamp



This lamp lights when decel. switch pressed, the engine speed decreases.

REVIEW: YOUFIXTHIS.COM

Download full manual at youfixthis.com

Lubricating the Working Equipment

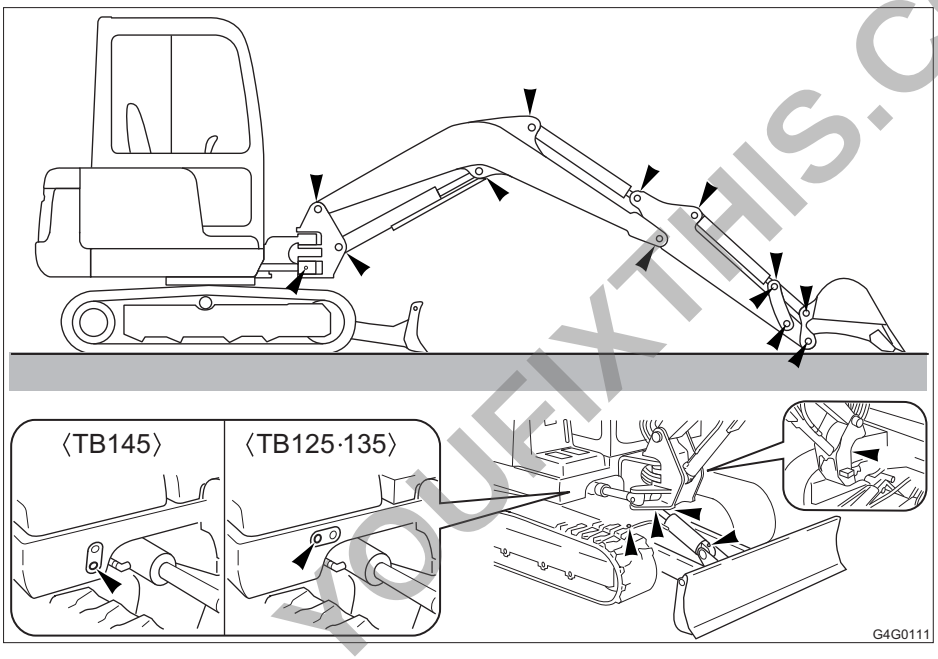

1. Set the machine to the lubrication posture shown in the diagram above, ground the working equipment, then stop the engine.
2. Use the grease gun to lubricate the grease nipples.
3. Wipe off the expelled grease.

PREVIEW - YOUFIXTHIS.COM

Download full manual at youfixthis.com

TB125 Equipped with Canopy and Rubber Crawlers

Units: mm (inches)

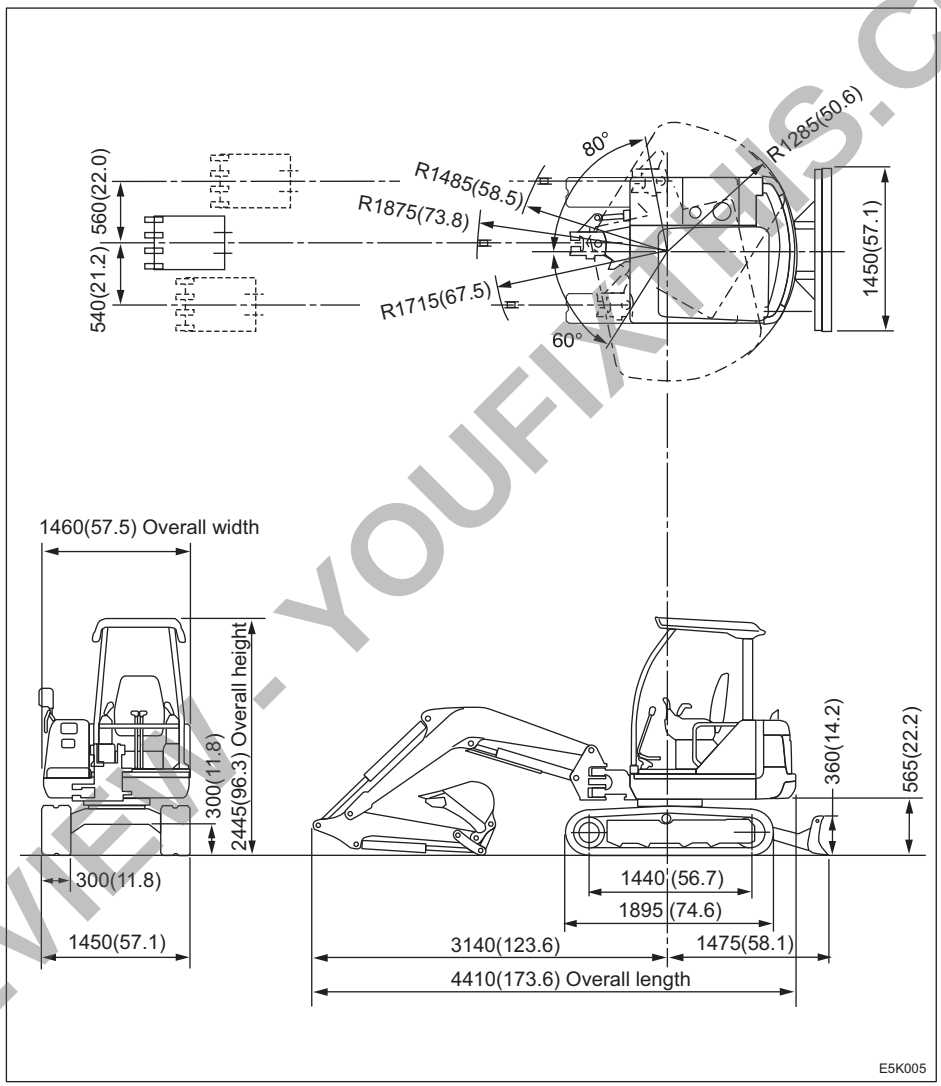

REVIEW - YOUFIXTHIS.COM

Download full manual at youfixthis.com

After loading the machine in the designated position, secure it as described below.

Transporting Posture

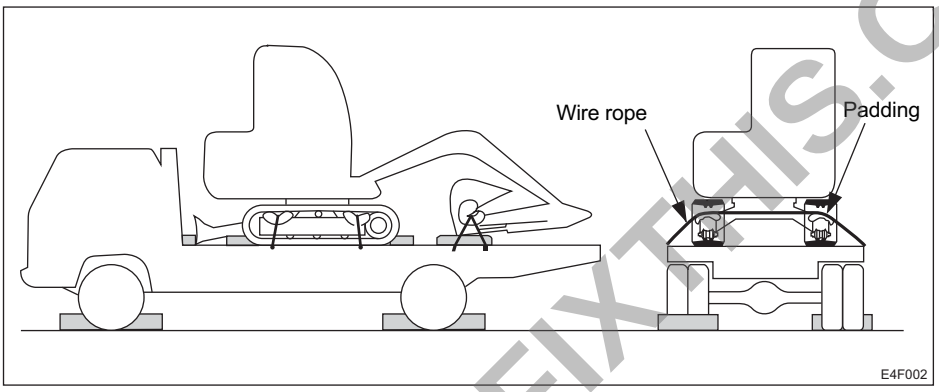

1. Lower the dozer blade.
2. Fully extend the bucket and arm cylinders, then lower the boom.
3. Stop the engine and remove the starter key.
4. Set the safety lock lever securely to the locked position.
5. Set stoppers in front and behind the crawlers.
6. Put a chain or wire rope over the lower frame and fasten it securely to prevent sideways slippage.
7. Secure the bucket with a chain or wire rope.

IMPORTANT: Place a wooden block under the bucket so that it is not damaged by hitting the floor.

REVIEW - YOUFIXTHIS.COM

Download full manual at youfixthis.com

Operating Ranges (TB125)

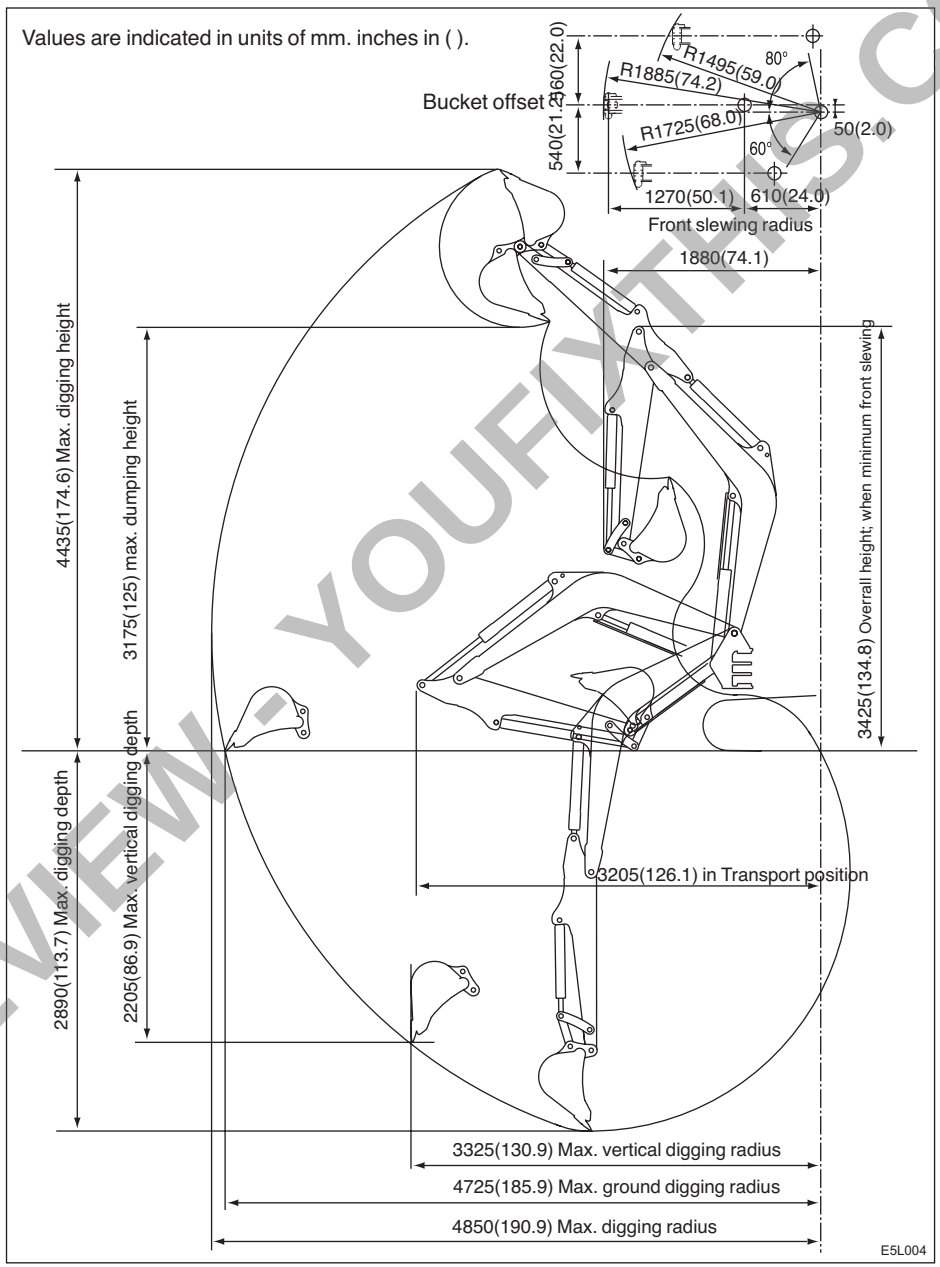

Download full manual at youfixthis.com

PREVIEW ONLY

You're viewing 12 of 263 pages

The full manual includes:

- All 263 pages, complete
- Searchable PDF (find any keyword)
- No watermarks
- Instant download
- Print-ready quality

GET FULL MANUAL NOW

Takeuchi TB125, TB135, TB145 Operator Manual

Scan or click anywhere
youfixthis.com

Click anywhere on this page to get the full manual