SPECIFICATIONS

Horsepower:

Engine, maximum Brake Horsepower at 2850 -- 210
Drawbar Horsepower (estimated) -- 167

Dimensions:

Wheel Base	-- 130 in. (3302 mm)
Length Overall	-- 253 in. (6426 mm)
Height Overall	-- 130 in. (3302 mm) to top of stack*
Height to Drawbar	-- 17 in. (432 mm)
Height to Differential	-- 23 in. (584 mm)
Height to Frame	-- 22 in. (559 mm)
Width	-- (see tire size)

Weight:

Maximum Operating Weight	-- 28000 lbs. (12700 kg)
Recommended Operating Weight	-- 22500 - 25000 lbs. (10206 - 11340 kg)

Tire Size and Tractor Width:

18.4 x 38 DUALS

- between Tread Centers

Inner Tires -- 72 in. (1829 mm)
Outer Tires -- 118 in. (2997 mm)

- Tractor width (outsides of tires)

Inner Tires -- 90.5 in. (2299 mm)
Outer Tires -- 137 in. (3480 mm)

20.8 x 38 DUALS

- between Tread Centers

Inner Tires -- 72 in. (1829 mm)
Outer Tires -- 122 in. (3099 mm)

*Different tire sizes affect height negligibly.

PREVIEW - YOUFIXTHIS.COM
Download full manual at youfixthis.com

ENGINE BREAK-IN

The Cummins engine used in VERSATILE tractors have been run on a dynamometer before installation in the tractor but not enough however to be considered broken in. For this reason it is recommended that extra care be taken in the first 100 hours of service by:

- Operating as much as possible at one-half to three-quarters load.
- Avoiding operation for long periods at engine idle speeds or at maximum horsepower levels in excess of five to ten minutes.
- CHECKING OIL LEVEL EVERY FIVE HOURS DURING THE BREAK-IN PERIOD.

ENGINE STARTING

1. Set the PARKING BRAKE.
2. Pull the THROTTLE LEVER down to its low speed position.
3. Step on the CLUTCH and put the floor SHIFT LEVER into the neutral position.
4. Turn the KEY SWITCH to ON.
5. Hold the MANUAL OVERRIDE Switch while pressing the STARTER button.

CAUTION

Do not crank the engine for more than 30 seconds at one time. If it does not start, wait TWO MINUTES before trying again.

6. Move THROTTLE lever sufficiently up to keep engine running after starting. Do not exceed 1500 rpm on the TACHOMETER.
7. Release the CLUTCH and ensure that the TRANSMISSION OIL PRESSURE Light extinguishes within 30 seconds.
8. Allow the engine to warm to about 120F (50C) before placing the unit under load.

COLD ENGINE STARTING

note: The QUICK START Handle activates the Ether discharge system which is a starting aid for temperatures lower than +50F (+10C). It sprays Ether into the engine intake manifold.

1. Set the PARKING BRAKE.
2. Pull the THROTTLE LEVER down to its low speed position.
3. Step on the CLUTCH and put the floor SHIFT LEVER into the neutral position.
4. Turn the KEY SWITCH to ON.
5. Pull out the QUICK START Handle for three to five seconds.
6. Push in the QUICK START Handle and wait five seconds.
7. Hold the MANUAL OVERRIDE Switch while pressing the STARTER Button.

CAUTION

Do not crank the engine for more than 30 SECONDS at one time. If it does not start, wait TWO MINUTES before trying again.

8. Move THROTTLE lever sufficiently up to keep engine running after starting. Do not exceed 1500 rpm on the TACHOMETER.

PREVIEW - YOUFIXTHIS.COM

Download full manual at youfixthis.com

ROUTINE SERVICE AND LUBRICATION

Service and lubrication intervals recommended in this manual are based on operation under average conditions. When operating the tractor in severe environments of heat, cold, dust, or other extremes, service the tractor at more frequent intervals. Give your maintenance program a high priority. It is the key to trouble free operation.

The following chart lists the recommended service intervals which are based on the tractor's hour meter. Remember, they are only suggested intervals. The operating environment of the tractor and your own observations of the machine will determine the maintenance schedule that is best.

Whenever required, service and lubrication information is given in more detail immediately following the Recommended Service Intervals Chart. The SERVICE ITEM column of the chart is keyed to this information. For example, Service Item "A", the first explanation following the chart, tells in detail about servicing the Air Cleaner.

RECOMMENDED SERVICE INTERVALS

as required

SERVICE ITEM	SERVICE
A	Clean Air Cleaner Outer Element
J	Brake Adjustment
K	Clutch Adjustment
R	Check Air Conditioner

every 10 hours
(or before daily startup)

SERVICE ITEM	SERVICE
A	Check Air Cleaner Restriction Indicator
B	Check Engine Coolant Level
C	Clean Radiator Grill

PREVIEW - YOUFIXTHIS.COM
Download full manual at youfixthis.com

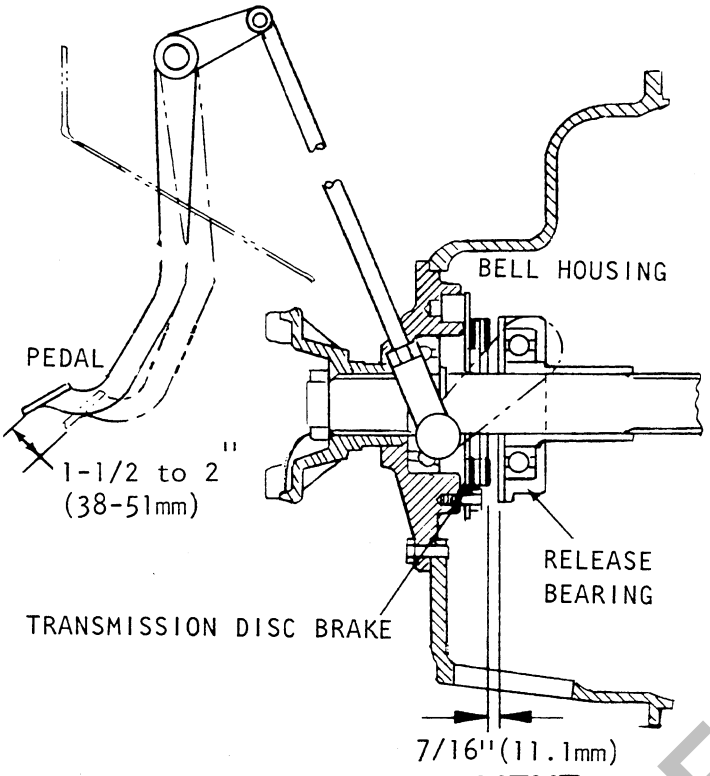

CLUTCH ADJUSTMENT

Periodic clutch adjustment is required to maintain the proper free pedal travel of one and one-half to two inches (38 - 51 mm) at the end of the pedal. If the free pedal travel becomes less than one inch (25 mm), the clutch should be readjusted as follows:

1. Remove lower clutch housing cover plate.

2. Remove the adjusting ring lock and rotate adjusting ring clockwise with screwdriver.

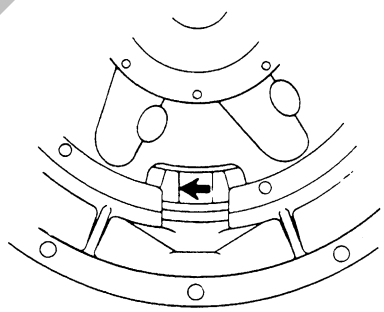

THIS ROTATION IS USED MAINLY TO COMPENSATE FOR FACING WEAR.

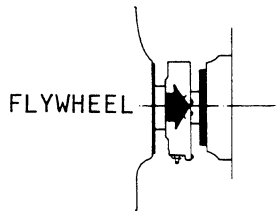

CLOCKWISE ROTATION OF THE ADJUSTING RING MOVES THE RELEASE BEARING AWAY FROM THE FLYWHEEL AS INDICATED BY ARROWS.

Movement of three notches means approximately 1/16 inch (1.5 mm) of release-bearing movement. In order to adjust the clutch locking ring, it is necessary that the pedal should be released to check for the proper 7/16 inch (11.1 mm) gap between the release-bearing and transmission brake as follows:

Holding the release-bearing back with your hand, insert a 7/16 inch (11.1 mm) keystock or bolt as a gauge between the rear of the release-bearing and the transmission brake disc.

note

In making this check the release bearing must be held back by hand. If more than 7/16 inch (11.1 mm) clearance, the adjusting ring requires further adjustment. If less, then the ring has been over-tightened and must be backed off.

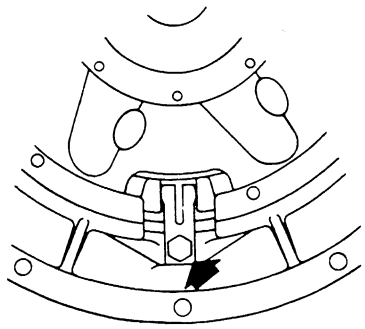

BE SURE TO REINSTALL THE ADJUSTING RING LOCK.

PREVIEW - YOUFIXTHIS.COM

Download full manual at youfixthis.com

TROUBLESHOOTING

If your tractor develops a problem, refer to the following chart. This chart is intended to help isolate and identify troubles, some of which might be cleared without any downtime. If you fail to find the fault, consult your VERSATILE dealer.

TROUBLESHOOTING AID

Symptom	Possible Causes	Possible Remedies
Steering Noisy	• Low Oil Reservoir	- Fill
	• Faulty Relief Valve	- Check and replace
Steering Erratic	• Clogged Filter	- Clean
	• System Air Leaks	- Check suction hose connections and filter gasket
	• Flattened Suction Hose	- Replace
Steering Hard	• Engine Idle Set Too Low	- Increase to 1000 rpm
	• Clogged Filter	- Clean
	• System Air Leaks	- Check suction hose connections and filter gasket
	• Faulty Piston Seals	- Replace Seals
No Steering	• Low Oil Reservoir	- Fill
	• Faulty Relief Valve	- Replace
	• Faulty Steering Cylinder	- Repair
	• Ruptured Hose	- Replace
	• Faulty Hydraulic Pump	- See VERSATILE Dealer
	• Faulty Steering Unit	- See VERSATILE Dealer
	• Clogged Filter	- Clean
	• System Air Leaks	- Check suction hose connections and filter gasket
Erratic Implement Control	• Low Hydraulic Oil	- Fill
	• Low Engine rpm	- Increase to 1000 rpm
	• Clogged Filter	- Replace
	• Ruptured Hose	- Replace
	• Faulty Hydraulic Circuit Component	- See VERSATILE Dealer

PREVIEW - YOUFIXTHIS.COM
Download full manual at youfixthis.com

ELECTRICAL SYSTEM

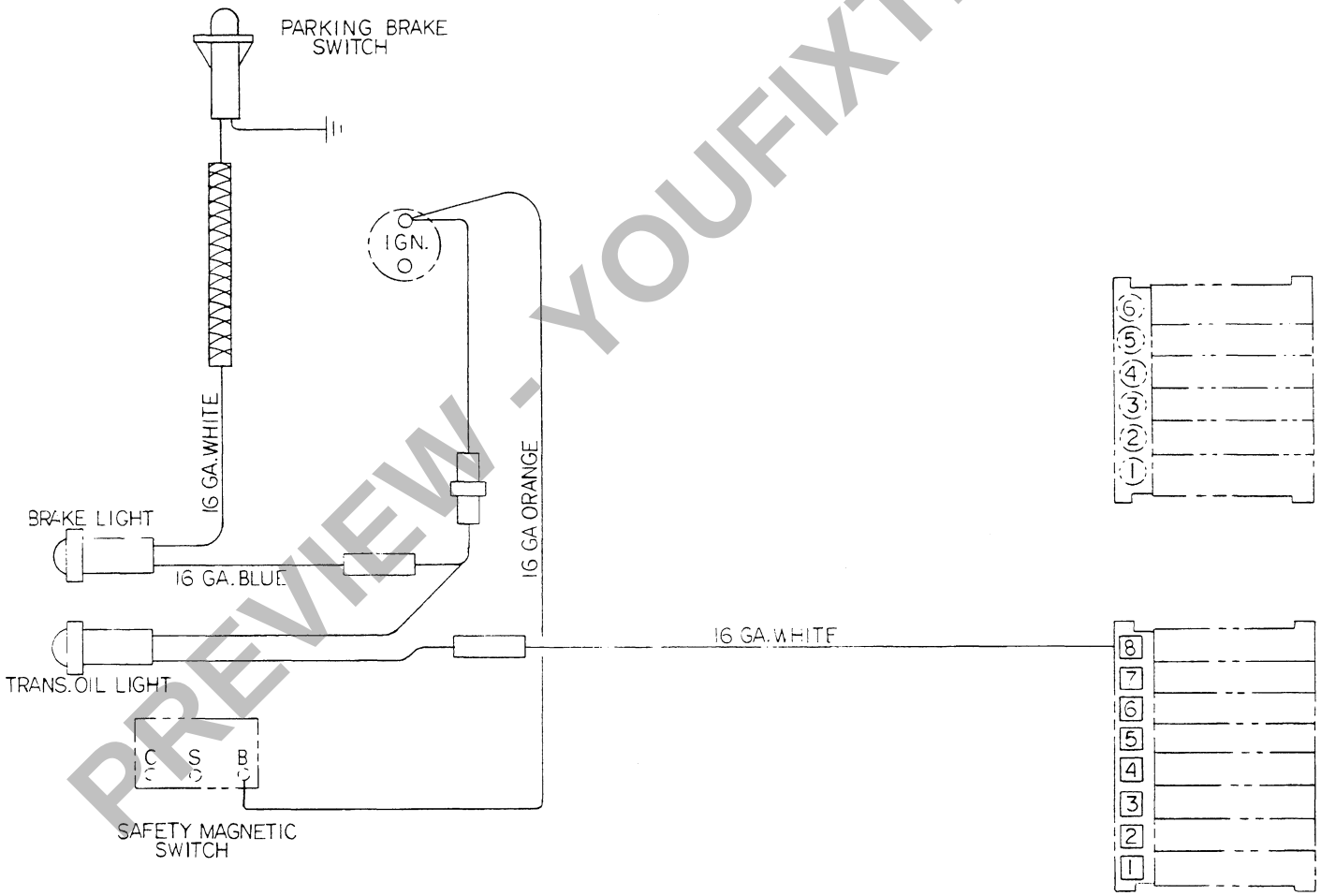

ELECTRICAL SCHEMATIC, PART 1

PREVIEW - YOUFIXTHIS.COM
Download full manual at youfixthis.com

HYDRAULIC SYSTEM

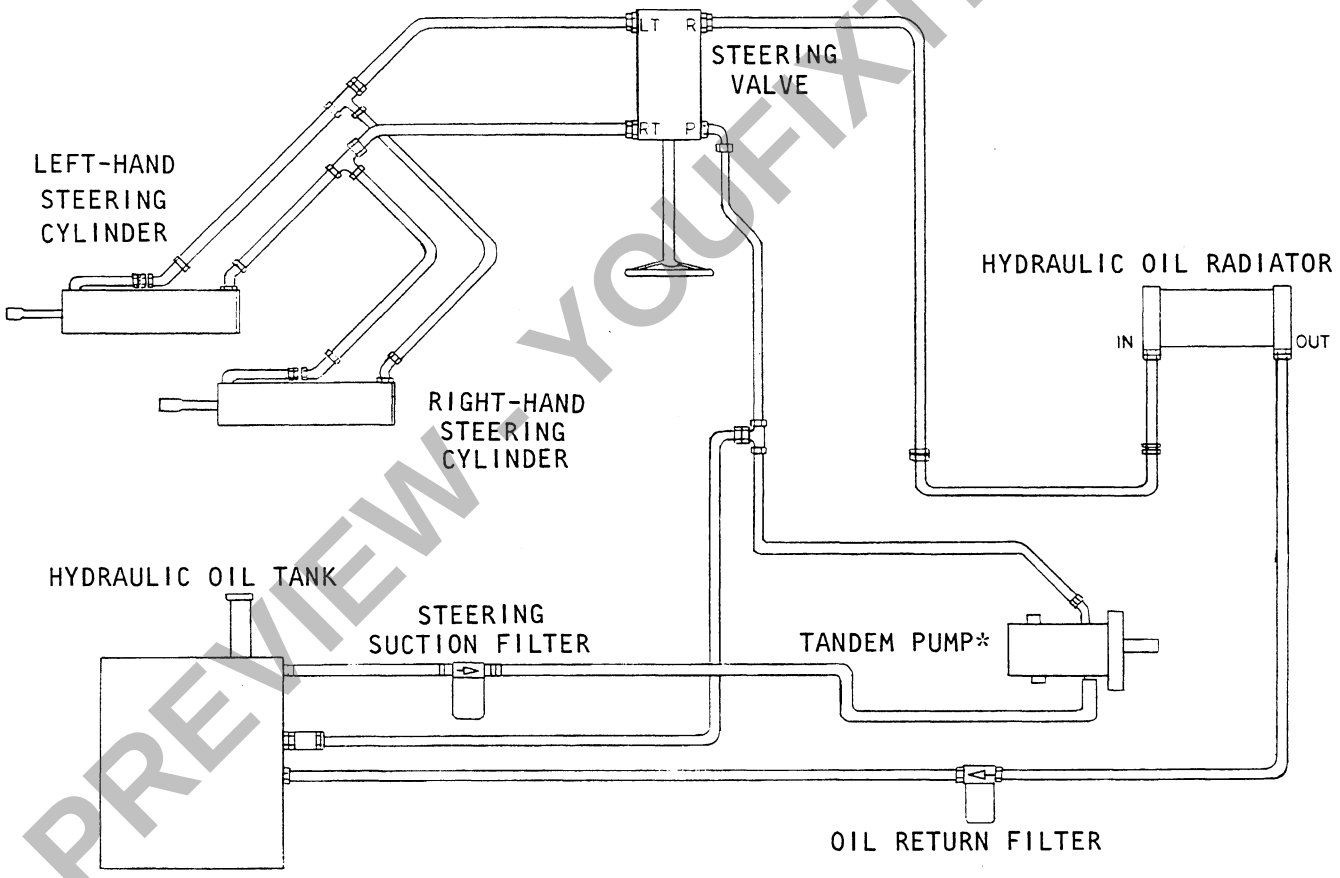

* PUMP FRONT SECTION FOR STEERING CIRCUIT

STEERING CIRCUIT

PREVIEW - YOUFIXTHIS.COM
Download full manual at youfixthis.com

- Tractor width (outsides of tires)

Inner Tires -- 93.75 in. (2381 mm)

Outer Tires -- 143 in. (3632 mm)

24.5 x 32 SINGLES

- between Tread Centers -- 72 in. (1829 mm)
- Tractor width (outsides of tires) -- 97.25 in. (2470 mm)

30.5 x 32 SINGLES

- between tread centers -- 77.25 in (1962 mm)
- Tractor width (outsides of tires) -- 107.75 in. (2737 mm)

Engine:

- Cummins®V-555, V8 Diesel
- Bore -- 4.625 in. x Stroke -- 4.125 in. (117 x 104.8 mm)
- Displacement -- 555 Cu. In. (9095 cm^3)
- Compression -- 17:1
- Maximum Torque -- 425 ft-lb at 1750 rpm
- Maximum Brake Horsepower -- 210 BHP at 2850 rpm
- Idle speed -- 1000 to 1050 rpm
- Full-load governed speed -- 2850 rpm
- Full-throttle no-load speed -- 3100 - 3135 rpm
- Fan -- 24 in. (610 mm) six blades
- Single muffler exhaust
- Oil cooler and full-flow oil filter with bypass oil conditioner. Oil pan angularity capability -- 30° incline.
- Radiator -- 750 sq. in. (4839 cm^2), 8.5 fins per in. (4.1 fins per cm), four-row core, surge tank.
- Air Cleaner -- triphase, dry type dual element, exhaust aspirated, reset type restriction indicator (20 in. H_2O)(508 mm H_2O).
- Ether cold-start aid.

PREVIEW - YOUFIXTHIS.COM

Download full manual at youfixthis.com

PREVIEW ONLY

You're viewing 8 of 72 pages

The full manual includes:

- All 72 pages, complete
- Searchable PDF (find any keyword)
- No watermarks
- Instant download
- Print-ready quality

GET FULL MANUAL NOW

Versatile 700 Operator Manual

Scan or click anywhere
youfixthis.com

Click anywhere on this page to get the full manual