# SPECIFICATIONS

## Horsepower:

• Engine maximum Brake Horsepower at 2400 rpm -- 300 (223,5 kW)

## Dimensions:

| | |
|---|---|
| • Wheel Base | -- 130 in. (3,30 m) |
| • Length Overall | -- 253 in. (6,43 m) |
| • Height Overall | -- 130 in. (3,30 m) to top of stack* |
| • Height to Drawbar | -- 18 in. (457 mm) |
| • Height to Differential | -- 23 in. (584 mm) |
| • Height to Frame | -- 22 in. (559 mm) |
| • Width | -- (See Tire Size) |

## Weight:

• Maximum Operating Weight--28,000 lb.( 12,700 kg)

• Recommended Operating Weights Range (most applications)
-- 26,000 - 27,500 lbs.
-- (11,790 - 12,470 kg)

## Tire Size and Tractor Width:

18.4 x 38 DUALS
• Between Tread Centers
Inner Tires -- 72 in. (1,83 m)
Outer Tires -- 118 in. (3,00 m)
• Tractor Width (outsides of tires)
Inner Tires -- 90.5 in. (2,30 m)
Outer Tires -- 137 in. (3,48 m)

20.8 x 38 DUALS
• Between Tread Centers
Inner Tires -- 72 in. (1,83 m)
Outer Tires -- 122 in. (3,10 m)
• Tractor Width (outsides of tires)
Inner Tires -- 92.75 in. (2,36 m)
Outer Tires -- 143 in. (3,63 m)

24.5 x 32 SINGLES
• Between Tread Centers -- 72 in. (1,83 m)
• Tractor Width (outsides of tires) -- 97.25 in. (2,47 m)

30.5 x 32 SINGLES
• Between Tread Centers -- 79.12 in. (2,10 m)
• Tractor Width (outsides of tires) -- 109.72 in. (2,79 m)

## Engine Specifications: (naturally aspirated)

• Cummins V-903 V8 Diesel

• Maximum torque -- 706 ft-lb at 1800 rpm (957 Nm)

• Compression ratio -- 16.5:1

• Fan -- 28 in. (711 mm), six-blade sucker type.

•Bore, 5.50 x Stroke, 4.75 in. (139,7 x 120,7).

•Displacement -- 903 cu. in. (14,8 l).

•Idle Speed - 1000 rpm.

•Full - load governed speed - 2400 rpm.

•Full - throttle no-load speed -- 2550 - 2640 rpm.

• Oil cooler and full-flow oil filter with bypass oil conditioner. Oil pan angularity capability - 30° incline.

• Radiator -- 930 sq. in. (6000 $cm^2$),7 fins per in. (2.8 fins per cm), four-row core, independent surge tank.

• Exhaust -- dual exhaust, rubber-mounted.



PREVIEW - YOUFIXTHIS.COM
Download full manual at youfixthis.com

# Operation

## ENGINE BREAK-IN

The Cummins engines used in VERSATILE tractors have been run on a dynamometer before installation in the tractor but not enough however to be considered broken in. For this reason it is recommended that extra care be taken during the first 100 hours of operation by:

• Avoiding operation for long periods at engine idle speeds or at maximum horsepower levels for more than five to ten minutes at a time.

• CHECKING OIL LEVEL EVERY FIVE HOURS DURING THE FIRST 100 HOURS OF OPERATION.

## ENGINE STARTING

1. Set the PARKING BRAKE

2. Pull the THROTTLE LEVER back to its low (idle) speed position.

3. Step on the CLUTCH and put the FLOOR SHIFT LEVER into the neutral position.

4. Turn the KEY SWITCH to ON.

5. Hold the MANUAL OVERRIDE Switch while pressing the STARTER button.




**CAUTION: Do not crank the engine for more than 30 seconds at one time. If it does not start, wait TWO MINUTES before trying again.**

6. Move the THROTTLE LEVER sufficiently up to keep engine running after starting. Idle speed is 1000 rpm. Avoid excessive rpm during warmup period.

7. Release the CLUTCH and ensure that the TRANSMISSION OIL PRESSURE LIGHT extinguishes within 30 seconds.

8. Allow the engine to warm to about 120F (50C) before placing the unit under load.

## COLD ENGINE STARTING

**NOTE: The COLD START KNOB activates the Ether discharge system which is a starting aid for temperatures lower than +50 (10C). It sprays Ether into the engine intake manifold when pulled out.**

1. Set the PARKING BRAKE.

2. Pull the THROTTLE LEVER back to its low (idle) speed position.

3. Step on the CLUTCH and put the FLOOR SHIFT LEVER into the neutral position.

4. Turn the KEY SWITCH to ON.

5. Pull out the COLD START KNOB for three seconds.

6. Push in the COLD START KNOB and wait five seconds.

7. Hold the MANUAL OVERRIDE Switch while pressing the STARTER Button.

**NOTE: Below 0°F (-18C) if engine does not start at once, repeat 5 to 7.**




**CAUTION: Do not crank the engine for more than 30 SECONDS at one time. If it does not start, wait TWO MINUTES before trying again.**

8. Move the THROTTLE LEVER sufficiently up to keep engine running after starting. Idle speed is 1000 rpm. Avoid excessive rpm during warmup period.




**CAUTION: At temperatures below +32F (0 C) release the CLUTCH slowly to allow the transmission oil to start flowing gradually.**

9. Release the CLUTCH slowly and ensure that the TRANSMISSION OIL PRESSURE LIGHT goes out within 30 seconds of full release.

10. Allow the engine to warm to about 120F (50C) before placing the unit under load.



PREVIEW - YOUFIXTHIS.COM
Download full manual at youfixthis.com

# ROUTINE SERVICE AND LUBRICATION

Service and lubrication intervals recommended in this manual are based on operation under average conditions. When operating the tractor in severe environments of heat, cold, dust, high-humidity, or other extremes, service the tractor at more frequent intervals. Give your maintenance program a high priority. It is the key to trouble free operation.

## BREAK IN PERIOD

Monitor the performance of the tractor during its first day of use. Shut it down after the first hour of running for a visual inspection. Be sure that all wheel bolts are tight and that all plumbing and hose connections are without leaks. Check the engine oil level. Verify also that the V-belts are settling in normally. Repeat this visual inspection at five hours and again at day's end.

**NOTE: Check the engine oil level at 5-hour intervals through the 50-hour break-in period and continue doing so until 100 hours have been logged.**

After its first full day in the field, check the tire inflation, and the levels of transmission oil, hydraulic fluid, coolant, and battery fluid. Also check the engine oil level and bring it up to full. The engine may use 1-3 quarts (or litres)-per day. Inspect the axle-and hitch-mounting bolts for any sign of loosening. They must be tight. Beneath the machine, verify that the universals have remained in proper condition. Grease the axle seals, clean the radiator and cooler fins, and check the fuel level. This completes the first day's break-in checks of the tractor and also the regular recommended daily service checks.

The machine can now go on a regular daily maintenance program until the 30-hour point, at which time the differentials and planetaries must be drained, flushed, and refilled with new oil.

At 50 hours, the first expanded service interval, the engine oil must be drained and replaced and the full-flow and by-pass oil filters changed. Also at this time the hydraulic and transmission oil filters should be serviced. The break in period is then completed and the tractor can go entirely on a regular maintenance program suited to its operating environment.

## PERIODIC SERVICING

The following chart lists the recommended service intervals which are based on the tractor's hour meter. Remember, they are only suggested intervals. The operating environment of the tractor and your own observations of the machine will determine the maintenance schedule that is best.

Whenever required, service and lubrication information is given in more detail immediately following the Recommended Service Intervals Chart. The SERVICE ITEM column of the chart is keyed to this information. For example, Service Item "A" the first explanation following the chart, tells in detail about servicing the Air Cleaner.

## RECOMMENDED SERVICE INTERVALS

**AS REQUIRED**

| SERVICE ITEM | SERVICE |
|---|---|
| A | Clean Air Cleaner Outer Element |
| I | Adjust Parking Brake |
| O | Check Air Conditioner and Air Conditioner Drain Traps |



PREVIEW - YOUFIXTHIS.COM
Download full manual at youfixthis.com

# Electrical System

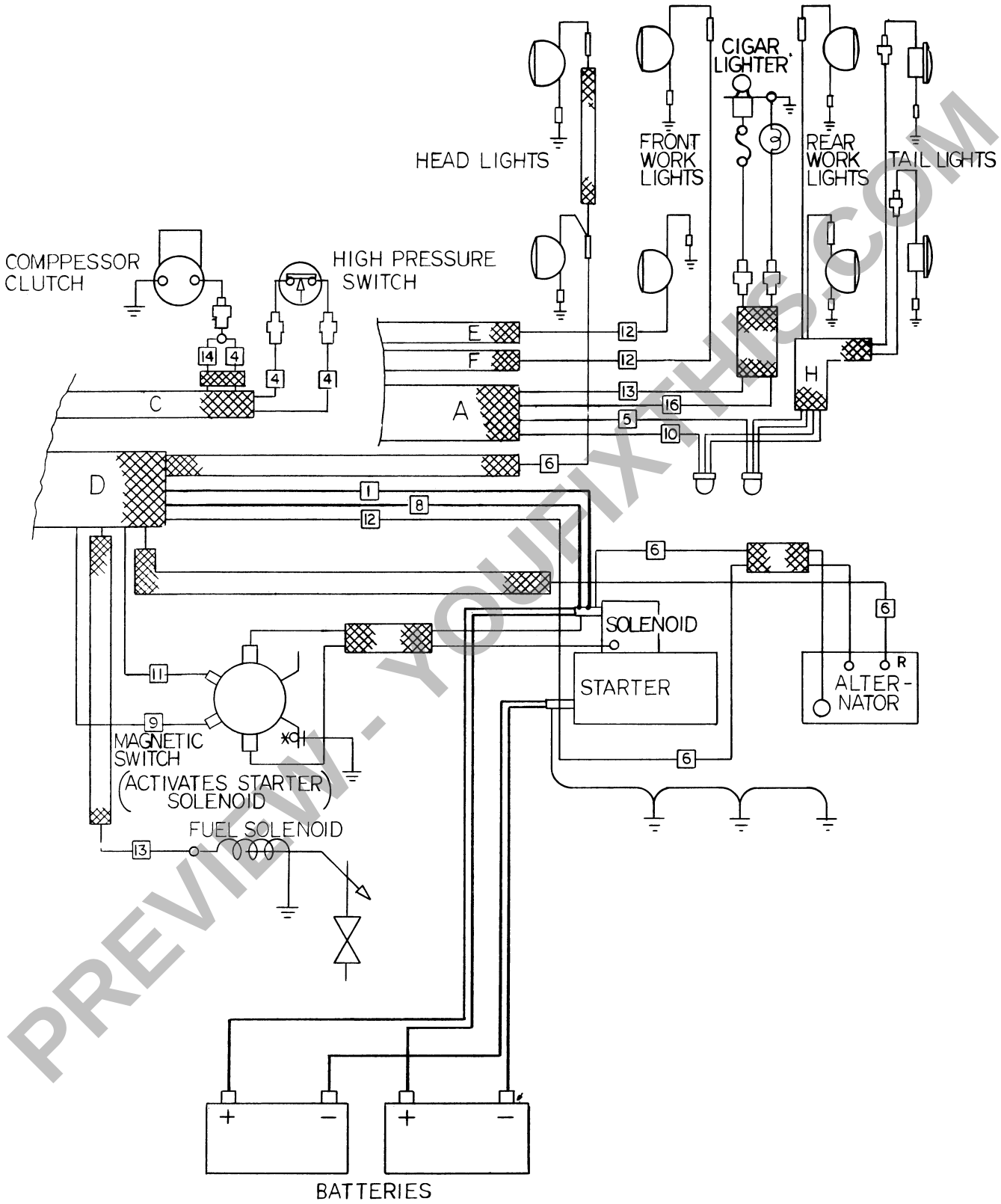


***Starter, Lights, And Accessory Circuit***

PREVIEW - YOUFIXTHIS.COM



Download full manual at youfixthis.com

# SYSTEM SCHEMATICS

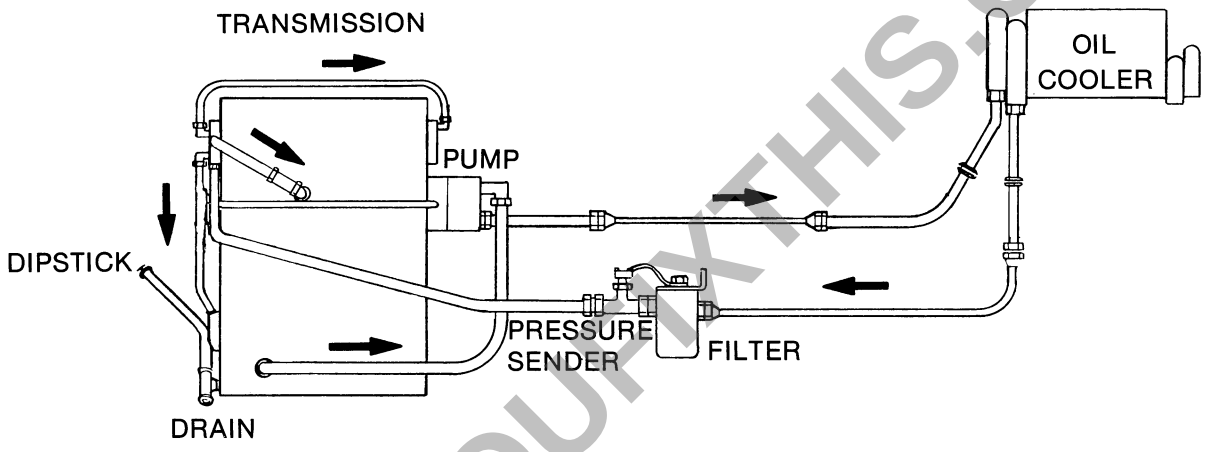


***Transmission Lubrication***

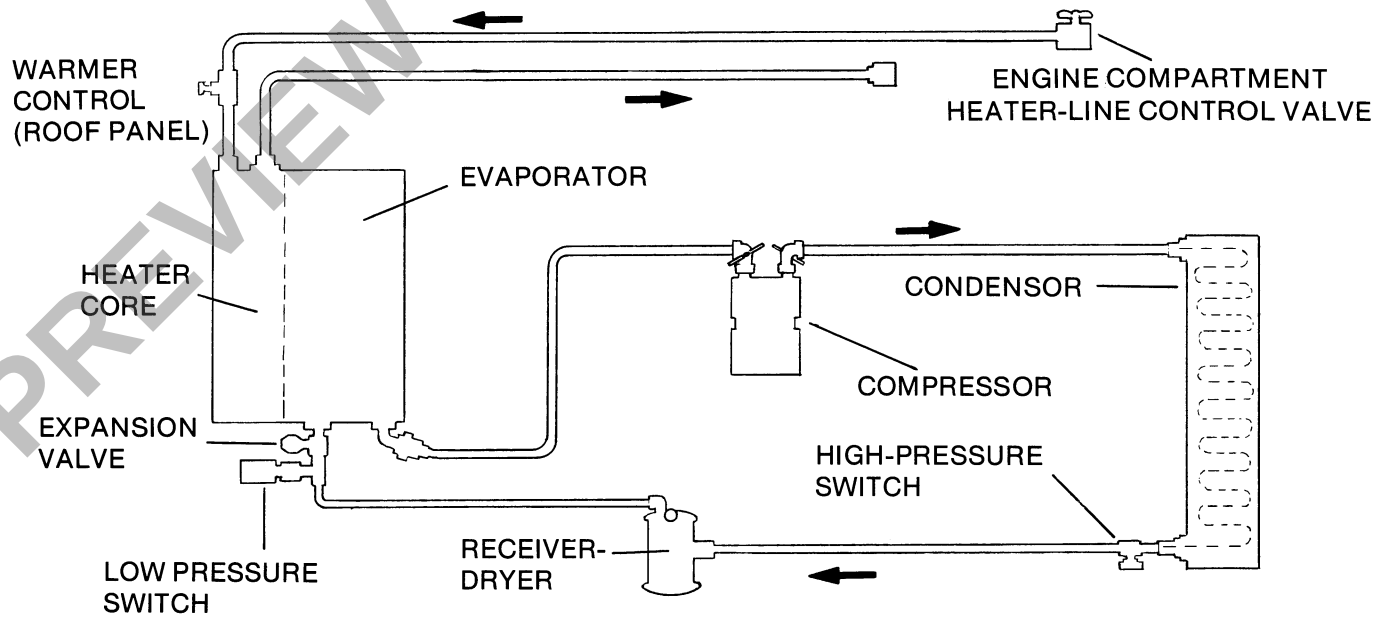


***Air Conditioner And Heater***



PREVIEW - YOUFIXTHIS.COM
Download full manual at youfixthis.com

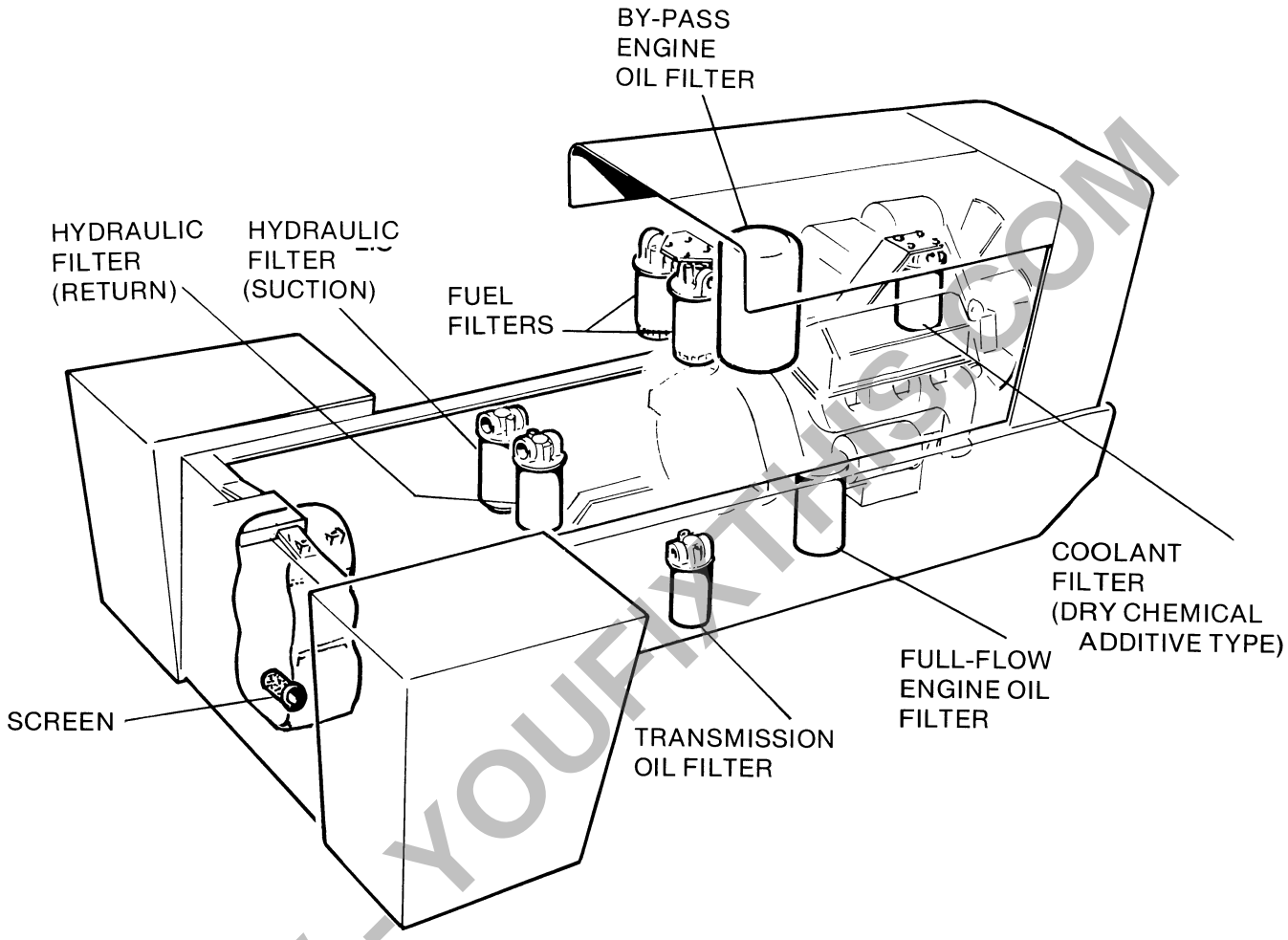


***Internal Filter Locations***

## H: WHEELS, TIRES, AND AXLE-MOUNTING BOLTS

Wheel sizes and tire sizes are optional depending on the operator's specific field conditions.

### Single Wheels

The wheel bolts should be tightened after the first hour of operation or after the first five miles (8 km) in road gear. Torque the wheel bolts to 220 ft-lbs. ( 300 N-m). This torque should be checked at least every 200 hours of operation thereafter. Should a bolt become lost, it must be replaced with a similar (grade 8) bolt.

### Dual Wheels

After the first hour of operation, check all wheel bolt tensions and periodically thereafter torque them to the following specification:

- Inner wheel bolts -- 220 ft-lbs (300 N-m)
- Tie rod bolts -- 150 ft-lbs (200 N-m)

### Axle Bolts

Check the Axle Mounting Bolts periodically during the first few days of operation and torque them if necessary. Check them every 200 hours as part of your preventative maintenance program. Axle bolt torque -- 450 ft-lbs (600 N-m).



PREVIEW - YOUFIXTHIS.COM
Download full manual at youfixthis.com

# TABLE OF CONTENTS

## SERIES 2 TRACTOR


| Section | Page |
|---|---|
| Specifications | 3 |
| Safety Rules | 6 |
| Controls and Instruments | 8 |
| Operation | 15 |
| Fuels, Fluids and Lubricants | 25 |
| Routine Service and Lubrication | 27 |
| Troubleshooting | 45 |
| Storage and Preparation | 48 |
| Electrical System | 50 |
| System Schematics | 55 |




PREVIEW - YOUFIXTHIS.COM

Download full manual at youfixthis.com

# SAFETY RULES

The farm accident statistics of the National Safety Council make grim reading. Many people die or suffer injury every year because of needless tractor accidents. You can avoid becoming a victim by putting safety first in all of your farming operations. When it comes to operating your VERSATILE tractor, be sure that you and your operators are familiar with the following rules and recommendations:

• Be sure that every operator is familiar with the machine. Do not let any unauthorized driver at the controls.

• Mount a fire extinguisher on the tractor. Maintain it and be familiar with its use.

• Allow only one operator on the tractor when it is in use. Never allow anyone to ride on the drawbar or hitch or any other part of the tractor.

• Always fasten your seat belt before starting the engine.

• Never attempt to start or operate the tractor except from the driver's seat.

• Do not oil, grease, or adjust the tractor while it is in motion. Do not leave the engine running while the tractor or drawn equipment is being adjusted or repaired.

• Never operate the tractor engine in a closed garage or shed.

• When hitching any load to the tractor, always hitch to the drawbar or the three-point hitch, hitch-points.

• When hitching drawn equipment to the drawbar, back the tractor past the clevis, then move forward so that, in making the connection, the tractor will be moving away from the equipment.

• Since loose clothes might catch in moving parts, always keep sleeves, jackets, or other clothing relatively tight and belted.

• When pulling heavy towed loads at road speeds, use extreme CAUTION. Avoid hard applications of the tractor brakes at high speeds.

• When transporting or driving the tractor on a road or a highway at night or during the day, use the hazard warning flasher. Implements should be provided with slow moving vehicle signs.

• Be sure the head lights are adjusted so that they will not blind the operator of an oncoming vehicle.

• The rate of tractor travel on hillsides, and curves should always be such that there is no danger of tipping. Avoid slopes which are too steep for safe operation.

• Always drive slowly over rough ground. Drive at speeds slow enough to ensure your safety.

• Where possible, do not drive near the edge of a gully or ditch.

• Avoid sharp uphill turns when operating on hillsides.

• When driving out of a ditch, gully or up a steep hillside, engage the clutch slowly.

• When descending steep grades, select a sufficiently low gear to maintain control with minimum braking. Always keep the tractor in gear when going down steep hills or grades and do not let the tractor coast with the transmission in neutral when descending the hill or grade.

• When the tractor is stopped, place the Floor Shift Lever in neutral and set the Parking Brake.



PREVIEW - YOUFIXTHIS.COM
Download full manual at youfixthis.com

# PREVIEW ONLY

You're viewing 8 of 66 pages

## The full manual includes:

- All 66 pages, complete
- Searchable PDF (find any keyword)
- No watermarks
- Instant download
- Print-ready quality

**GET FULL MANUAL NOW**

**Versatile 900, 2 Model 900 Operator Manual**

**Scan or click anywhere**
**youfixthis.com**

*Click anywhere on this page to get the full manual*