Changing engine oil

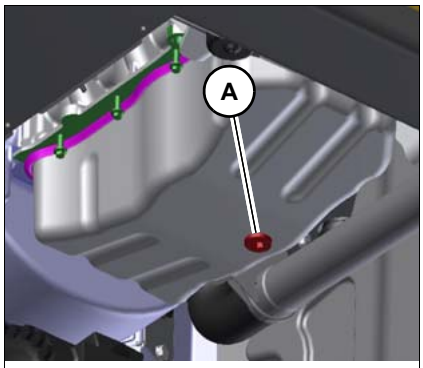

Fig. 36: Draining engine oil Tier IV

☞ *Let the engine run until it reaches its operating temperature (oil temperature about 80 °C/176 °F).*

☞ *Stop and park the machine. Stop the engine – see Preparing lubrication on page 3-9.*

☞ *Open the service flap on the right – see Service flaps on page 3-17.*

☞ *Remove the underbody maintenance access with a suitable tool (only for DW60 55 kW/ 73.8 hp) – see Underbody maintenance access on page 3-18.*

☞ *Place a suitable container under oil drain plug **A**.*

☞ *Clean the area around the oil drain plug with a lint-free cloth.*

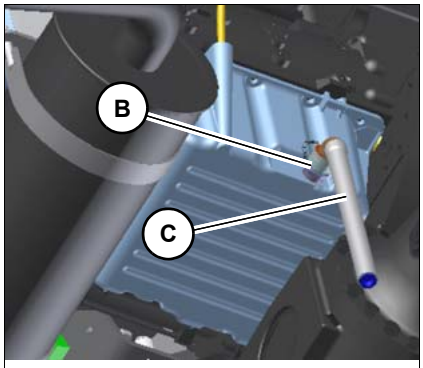

Fig. 37: Draining engine oil Tier III with the service valve

☞ *Carefully unscrew oil drain plug **A** with a suitable tool.*

☞ If the machine is equipped with the optional service valve **B**, install drain hose **C** (supplied with the machine) and turn the drain valve button anticlockwise to drain the oil.

☞ *Completely drain the oil.*

☞ Replace the sealing ring of oil drain plug **A**.

☞ *Screw in oil drain plug **A** and tighten it to 34 Nm (25 ft.lbs) with a suitable tool.*

☞ If the machine is equipped with the optional service valve **B**, turn the drain valve button clockwise to close the drain valve, and remove drain hose **C**.

☞ *Clean the area around the oil filler cap with a lint-free cloth.*

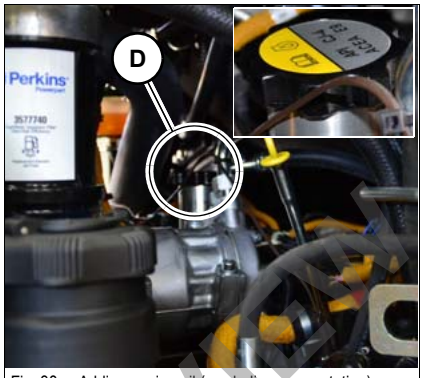

Fig. 38: Adding engine oil (symbolic representation)

☞ *Add new engine oil at filler cap **D**.*

☞ *Start the engine and let it run briefly at low speed.*

☞ *Stop the engine.*

☞ *Wait about 5 minutes until all the oil has run into the oil sump.*

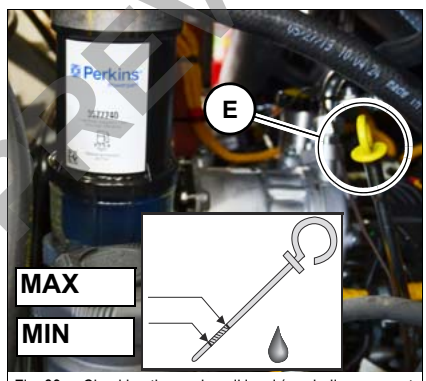

Fig. 39: Checking the engine oil level (symbolic representation)

☞ *Check the oil level with oil dipstick **E** and add engine oil if necessary – see Checking the engine oil level on page 3-30.*

☞ *Completely remove all oil spills from the engine.*

☞ *Install the underbody maintenance access with a suitable tool (only for DW60 55 kW/ 73.8 hp) – see Underbody maintenance access on page 3-18.*

☞ *Close the service flap on the right – see Service flaps on page 3-17.*

Environment!

Use a suitable container to collect fluids and lubricants as they flow out and dispose of them in an environmentally friendly manner.

PREVIEW - YOUFIXTHIS.COM

Download full manual at youfixthis.com

UNF thread Triple-Lok		
Thread	Wrench size	Torque Nm (ft.lbs)
7/16-20	14 / 16	18 (13.2)

PREVIEW - YOUFIXTHIS.COM

Blurred on purpose. The manual you buy has this page in full quality.

Download full manual at youfixthis.com

7.2 Hydraulics diagram DW60/DW60P/DW60 LRC

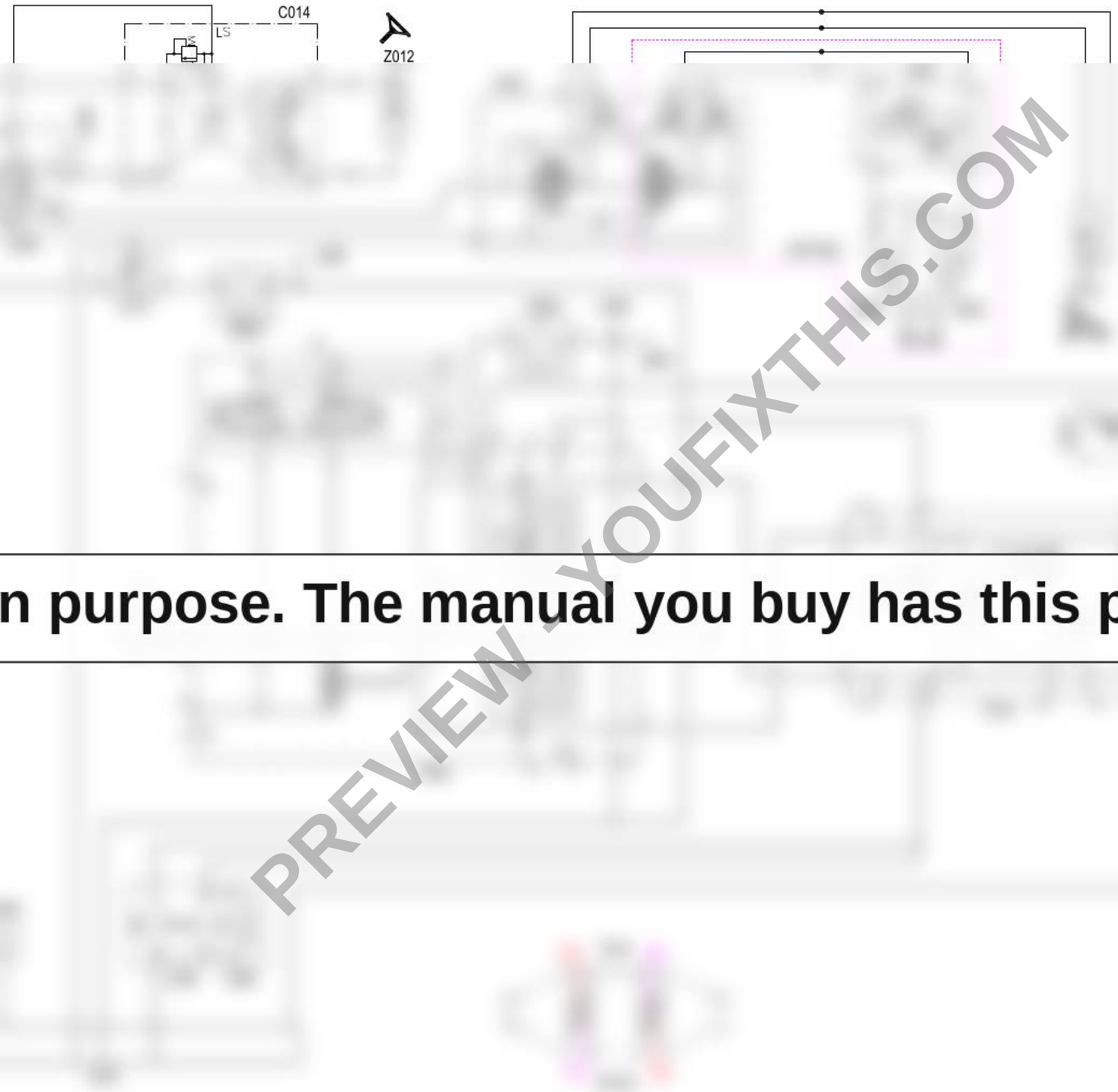

PREVIEW - YOUFIXTHIS.COM

Blurred on purpose. The manual you buy has this page in full quality.

Download full manual at youfixthis.com

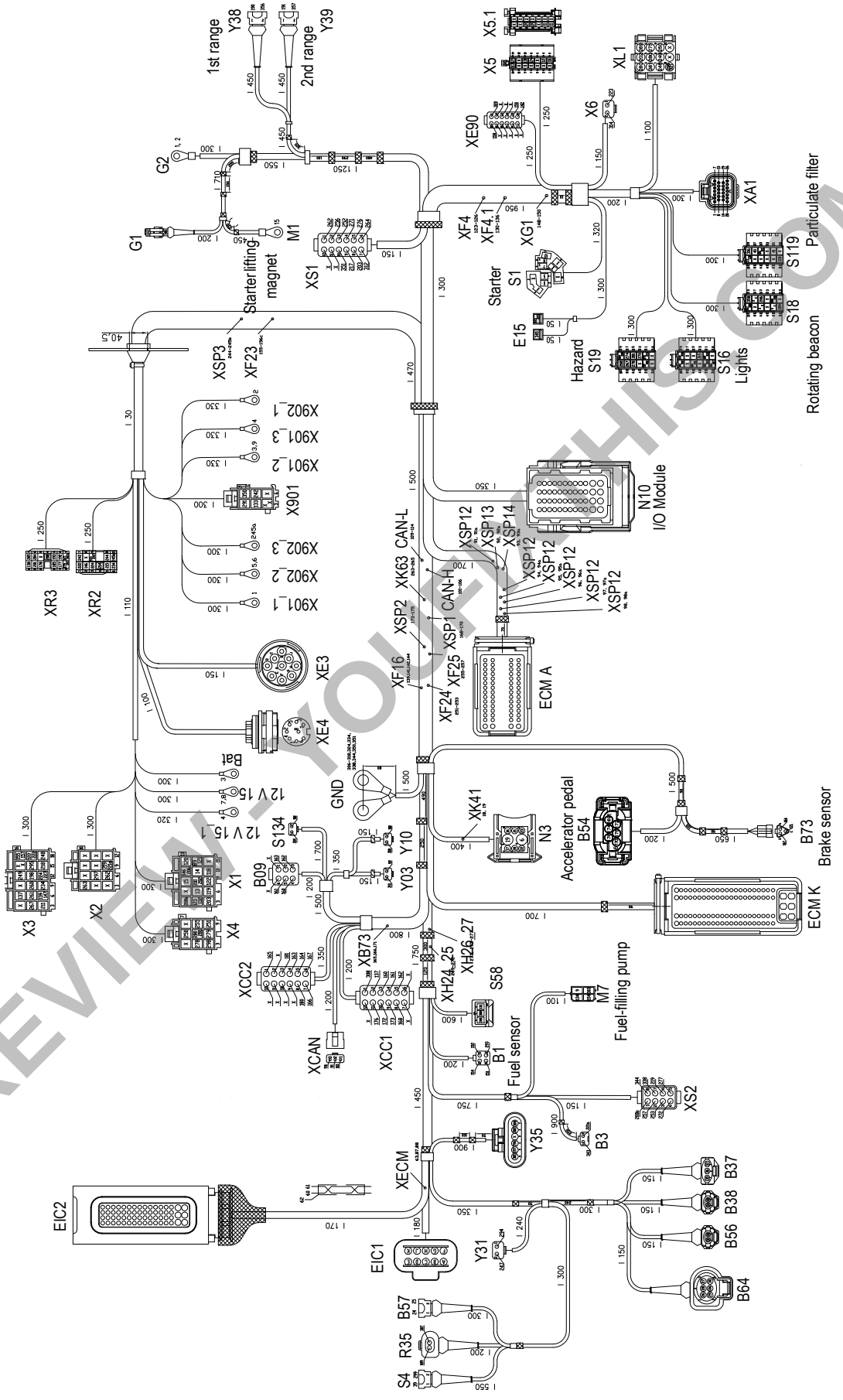

PREVIEW - YOUFIXTHIS.COM

Main wiring harness Tier IV

Download full manual at youfixthis.com

Sensors, signal transmitters (electrical system)	B	517000-517399		
Fuel indicator	B001	517000		
Horn	B002	517001		
Reversing warning system	B003	517002		
Front axle steering sensor	B004	517003		
Rear axle steering sensor	B005	517004		
Engine temperature sensor	B006	517005		
Hydraulic oil temperature sensor	B007	517006		
Load sensor – strain gage	B008	517007		
Speed sensor	B009	517008		
Diesel engine speed	B010	517009		
Loudspeaker	B011	517010		
Loudspeaker	B012	517011		
Proximity switch	B013	517012		
Engine preheating system temperature sensor	B014	517013		
Coolant level sensor	B015	517014		
Fan control temperature sensor	B016	517015		
Gearbox input speed transmitter	B017	517016		
Buzzer	B018	517017		
Quickhitch buzzer	B019	517018		
Camshaft speed	B020	517019		
Charge air sensor (temperature/pressure)	B021	517020		
Rail/fuel pressure sensor	B022	517021		
Engine oil pressure sensor	B023	517022		
Fuel low pressure sensor	B024	517023		
Crankshaft speed	B025	517024		
Telescopic boom sensor (extended, rear)	B026	517025		
Telescopic boom sensor (extended, middle)	B027	517026		
Position pickup for bucket repositioning	B028	517027		
Particulate filter temperature sensor	B029	517028		
Particulate filter temperature sensor	B030	517029		
Outside temperature sensor	B031	517030		
Cabin temperature sensor	B032	517031		
Air duct temperature sensor	B033	517032		
Fan control temperature sensor	B034	517033		
Pressure sensor (exhaust gas back pressure after turbo-charger)	B035	517034		
Exhaust gas mass flow sensor	B036	517035		
Diesel particulate filter differential pressure	B037	517036		
DPF input temperature sensor	B038	517037		
Buzzer option	B039	517038		
Extend/retract boom scroll wheel (Hall sensor)	B040	517039		
3rd control circuit scroll wheel (Hall sensor)	B041	517040		
Forward/reverse travel scroll wheel (Hall sensor)	B042	517041		
Position sensor spool I	B043	517042		

PREVIEW - YOUFIXTHIS.COM

Download full manual at youfixthis.com

3.2 Maintenance overview

Maintenance label

Maintenance that has to be performed by the operator is indicated on the maintenance label

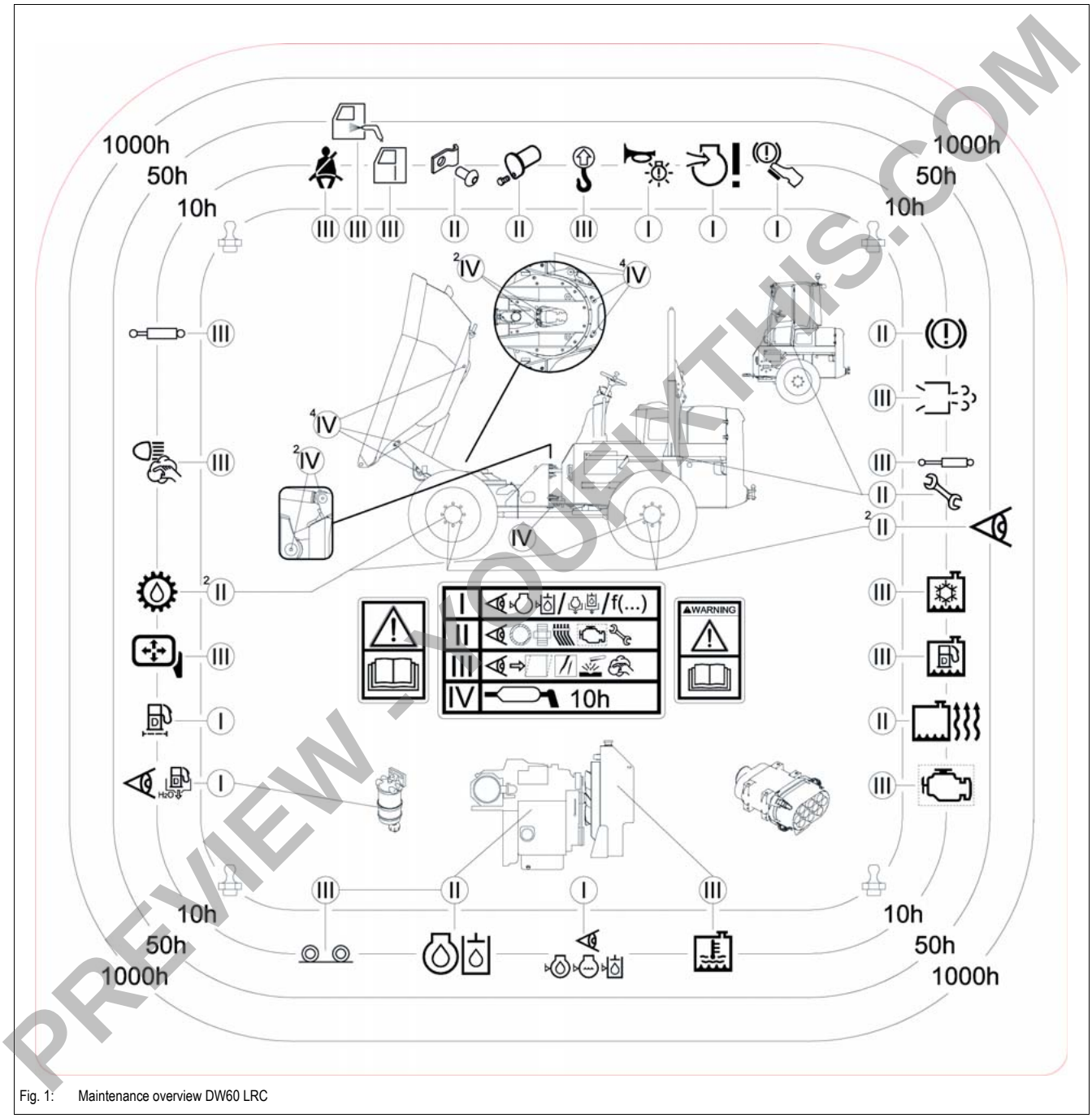

Fig. 1: Maintenance overview DW60 LRC

I Checking functions and levels, filling up and draining.

II Checking wear parts, seals, hoses and threaded fittings.

III Checking for damage, corrosion, dirt.

IV Lubricate daily after the work shift.

Superscript numbers, for example ^{2}: number of lubrication points.

PREVIEW - YOUFIXTHIS.COM

Download full manual at youfixthis.com

Table of Contents

Operation
Information on this service manual ... 1-2
Identification of warnings and dangers ... 1-3
Explanation of symbols and abbreviations ... 1-3
Abbreviations ... 1-4
Conversion table ... 1-5
Warranty and liability ... 1-6
Exemption from warranty and liability ... 1-6
Labels ... 1-7
Type labels ... 1-7
Machine overview ... 1-10
Vehicle repair after recovery ... 1-12
Enabling the Pressure relief valve ... 1-12
Enabling the hydraulic parking ... 1-12
Fire extinguisher ... 1-13

Technical data
Model designations and trade names ... 2-2
Engine ... 2-3
Traveling drive/axles ... 2-4
Brakes ... 2-4
Tires ... 2-5
Steering system ... 2-5
Work hydraulics ... 2-6
Maximum speed ... 2-7
Coolant ... 2-8
Compound table ... 2-8
Noise emissions ... 2-8
Vibration ... 2-8
Hose identification code ... 2-8
Weight ... 2-9
Machine weights ... 2-9
Ground clearance ... 2-9
Payload/stability ... 2-10
Electrical system ... 2-11
Fuse box ... 2-11
Bulbs ... 2-13
Tightening torques ... 2-13
Model-specific tightening torques ... 2-13
General tightening torques ... 2-13
Tightening torques for hydraulic threaded fittings (dry assembly) ... 2-14
Tightening torques for high-resistance threaded fittings ... 2-16
Dimensions ... 2-18
Front skip (overview) ... 2-18
Swivel skip with rollbar (overview) ... 2-20
Swivel skip with cabin (overview) ... 2-22

Maintenance
Fluids and lubricants ... 3-2
Engine oil types (temperature-dependent) ... 3-4
Hydraulic oil types (depending on temperature) ... 3-4
Important information regarding operation with biodegradable hydraulic oil ... 3-5
Maintenance overview ... 3-6
Maintenance label ... 3-6
Lubrication work ... 3-9

PREVIEW - YOUFIXTHIS.COM

Download full manual at youfixthis.com

Preparing lubrication ... 3-9
Lubrication plan ... 3-10
Maintenance plan ... 3-11
Information on maintenance ... 3-16
Responsibilities and prerequisites ... 3-16
Important safety instructions on maintenance ... 3-16
Maintenance accesses ... 3-17
Service flaps ... 3-17
Fan grid ... 3-18
Underbody maintenance access ... 3-18
Control stand maintenance access ... 3-18
Fuse box ... 3-19
Battery case ... 3-19
Battery master switch ... 3-19
Fuel system ... 3-20
Important information regarding the fuel system ... 3-20
Diesel fuel specification ... 3-20
Refueling ... 3-20
Water separator ... 3-22
Emptying the water separator ... 3-22
Replacing the water-separator prefilter element ... 3-23
Replacing the fuel filter ... 3-24
Bleeding the fuel system ... 3-27
Replace the breather filter of the fuel tank ... 3-28
Emptying the fuel tank ... 3-28
Engine lubrication system ... 3-29
Important information regarding the engine lubrication system ... 3-29
Checking the engine oil level ... 3-30
Adding engine oil ... 3-30
Changing engine oil ... 3-31
Replacing the engine-oil filter cartridge ... 3-32
Cooling system ... 3-34
Important information regarding the cooling system ... 3-34
Checking the coolant level ... 3-35
Adding coolant ... 3-35
Leakage check ... 3-35
Checking the antifreeze ... 3-36
Draining coolant ... 3-36
Replace the radiator cap ... 3-37
Cleaning the radiator ... 3-38
Checking/cleaning the condenser ... 3-39
Air filter ... 3-40
Important information regarding the air filter ... 3-40
Air filter monitoring ... 3-40
Replacing the air filter ... 3-40
Clean the dust valve ... 3-41
Checking the air intake ... 3-42
Replacing/cleaning the cabin air filter ... 3-42
Washer system ... 3-43
Important information regarding the washer system ... 3-43
Checking the fluid level and adding fluid ... 3-43
V-belt ... 3-44
Checking V-belt tension Tier III ... 3-44
Replacing the V-belt ... 3-44
Replacing the V-belt of the air conditioning system (option) Tier IV ... 3-46
Replace the crankcase breather filter ... 3-47
Pressure check ... 3-48

PREVIEW - YOUFIXTHIS.COM

Download full manual at youfixthis.com

3.3 Lubrication work

Preparing lubrication

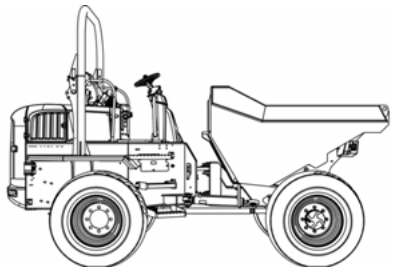

Fig. 4: Preparing lubrication

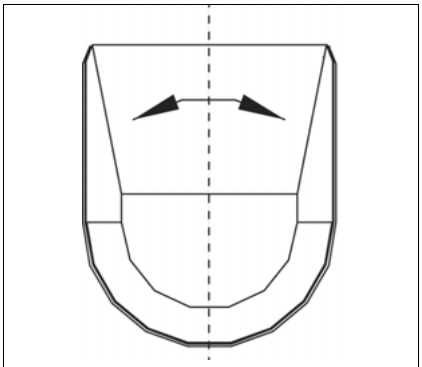

Fig. 5: Middle position for swivel skip

☞ *Park the vehicle on firm, level, and horizontal ground.*

☞ *Lower the skip. Check the middle position if the machine is equipped with a swivel skip.*

☞ *Stop the engine.*

☞ *Operate the joystick repeatedly to release the pressure in the hydraulic system.*

☞ *Remove the starting key and carry it with you.*

☞ *Remove all loose objects inside the machine, or store them safely.*

☞ *Close the windows and doors.*

☞ *Close and lock all covers.*

☞ *Attach a warning label to the control elements (for example "Machine being serviced, do not start").*

☞ *Wait at least 10 minutes after stopping the engine!*

PREVIEW - YOUFIXTHIS.COM

Download full manual at youfixthis.com

Checking the condition and age of hydraulic hoses

Notice!

Leaking and damaged pressure hoses have to be removed immediately. This not only increases the operating safety of the machine but also helps to protect the environment.

- Malfunctioning or leaking pressure lines must be immediately removed.
- Have hydraulic hoses replaced every 6 years from the date of manufacture, even if they do not seem to be damaged.

In this respect, we recommend that you observe all the relevant safety regulations for hydraulic lines, as well as the safety regulations regarding accident prevention and occupational health and safety in your country. Also observe DIN 20 066, part TI. 5.

The article number is marked on the clamping section, and the date of manufacture is indicated on the hose of each hose connection.

Have a line replaced if one of the following problems is detected:

- Damaged or leaky hydraulic seals.
- Worn or torn shells or uncovered reinforcement branches.
- Expanded shells in several positions.
- Entangled or crushed movable parts.
- Foreign bodies jammed or stuck in protective layers.

PREVIEW - YOUFIXTHIS.COM

Download full manual at youfixthis.com

4.3 Perkins engine 1104D-44T

Overview of Perkins engine 1104D-44T

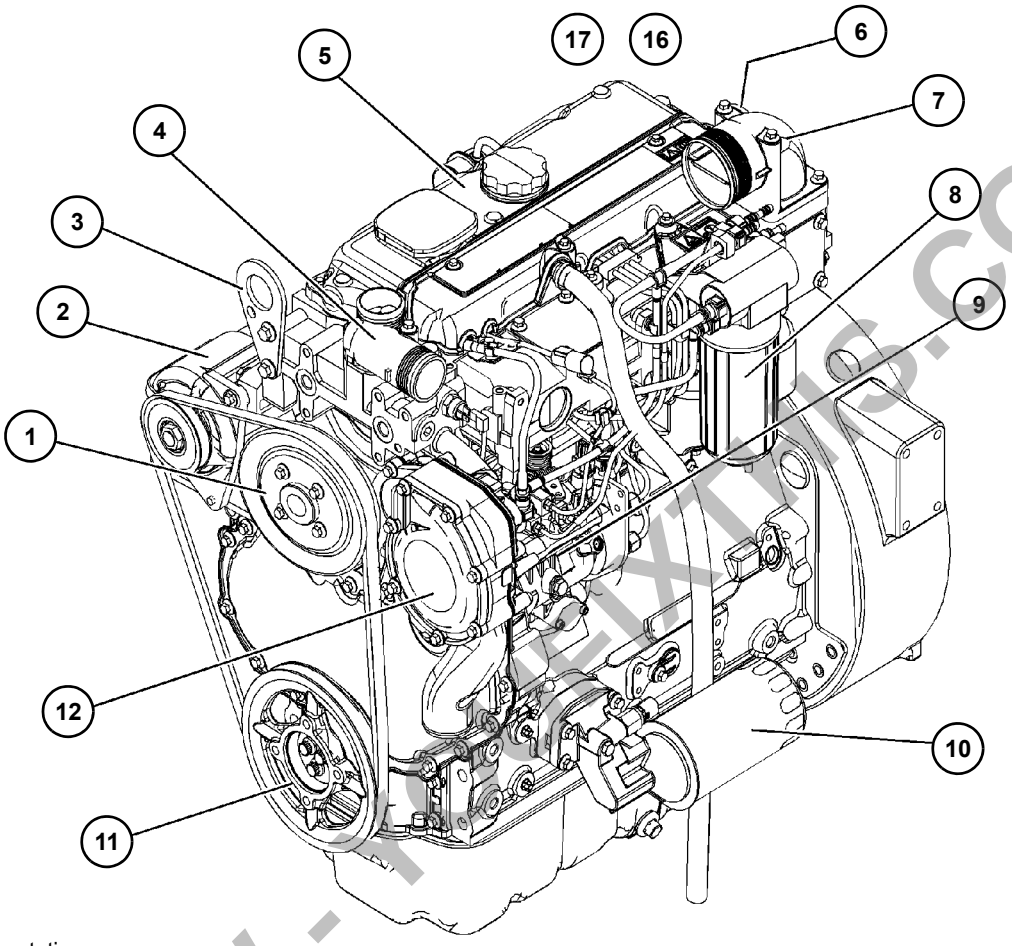

Symbolic representation

Pos.	Designation	Pos.	Designation
1	Pulley	7	Air intake
2	Alternator	8	Fine fuel filter
3	Front lifting eye	9	Fuel injection pump
4	Water outlet	10	Oil filter
5	cylinder-head cover	11	Crankshaft pulley
6	Rear lifting eye	12	Water pump

Notice!

Oil filter installed upright

PREVIEW - YOUFIXTHIS.COM

Download full manual at youfixthis.com

6.13 Front lights wiring harness

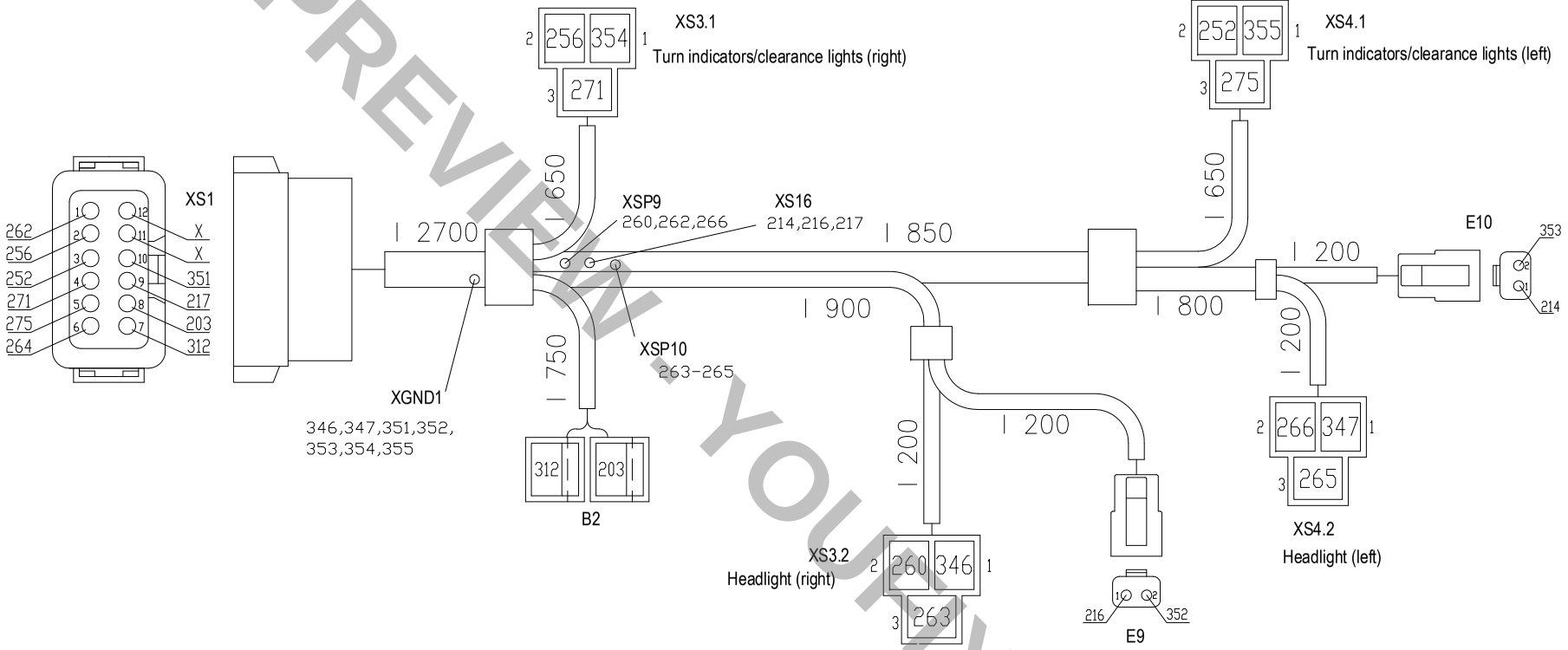

Strand	From	To	mm²	Color	Function
203	XS1/8	B2/1	1	vt	Horn
214	XS16	E10/1	1	vt	Front working lights
216	XS16	E9/1	1	vt	Front working lights (functional lights)
217	XS1/9	XS16	1	vt	Front working lights
252	XS1/3	XS4.1/2	1	gy	Clearance light (left)
256	XS1/2	XS3.1/2	1	gy	Clearance light (right)
260	XSP9	XS3.2/2	1	gy	Low beam
262	XS1/1	XSP9	1	gy	Low beam
263	XSP10	XS3.2/3	1	gy	High beam
264	XS1/6	XSP10	1	gy	High beam
265	XSP10	XS4.2/3	0.75	gy	High beam indicator light

Strand	From	To	mm²	Color	Function
266	XSP9	XS4.2/2	1	gy	Low beam
271	XS1/4	XS3.1/3	0.75	gy	Front right turn indicator
275	XS1/5	XS4.1/3	0.75	gy	Turn indicators (left)
312	XS1/7	B2/2	1	bk	Ground
346	XGND1	XS3.2/1	1	bk	Ground
347	XGND1	XS4.2/1	1	bk	Ground
351	XS1/10	XGND1	1	bk	Ground
352	XGND1	E9/2	1	bk	Ground
353	XGND1	E10/2	1	bk	Ground
354	XGND1	XS3.1/1	1	bk	Ground
355	XGND1	XS4.1/1	1	bk	Ground

PREVIEW - YOUFIXTHIS.COM

Download full manual at youfixthis.com

PREVIEW ONLY

You're viewing 12 of 265 pages

The full manual includes:

- All 265 pages, complete
- Searchable PDF (find any keyword)
- No watermarks
- Instant download
- Print-ready quality

GET FULL MANUAL NOW

Wacker Neuson DW60, DW90, DW100, D18-01, D18-02, D18-03 Service Manual

Scan or click anywhere
youfixthis.com

Click anywhere on this page to get the full manual