3.7 Maintenance accesses

Engine cover

Danger!

Burn hazard due to hot engine parts!

Can cause serious burns.

☞ *Stop the engine and let it cool down.*

☞ *Wear protective equipment.*

Danger!

Injury hazard due to rotating parts!

Rotating parts can cause serious injury or death.

☞ *Open the engine cover only at engine standstill.*

Caution!

Injury hazard due to open engine cover!

Can cause injury.

☞ *Take care not to knock your head on the open engine cover.*



Fig. 24: Engine cover

Opening:

☞ *Stop and park the vehicle Stop the engine See “Preparing lubrication”.*

☞ *Open the engine cover by pressing button **A**.*

➥ The engine cover is supported by a gas strut.

Closing:

☞ *Firmly press down the engine cover.*

Locking and unlocking:

- The engine cover is locked with the starting key.

☞ *Turn the starting key in lock **A** to the right **R**.*

➥ Engine cover locked.

☞ *Turn the starting key in lock **A** to the left **L**.*

➥ Engine cover unlocked.

PREVIEW - YOUFIXTHIS.COM

Download full manual at youfixthis.com

1.6 Machine overview

Position	Designation
1	Lights
2	Working lights



Blurred on purpose. The manual you buy has this page in full quality.



PREVIEW - YOUFIXTHIS.COM

Download full manual at youfixthis.com

10.34 Hydraulics diagram (up to serial number WNCE0606JPAL00585)

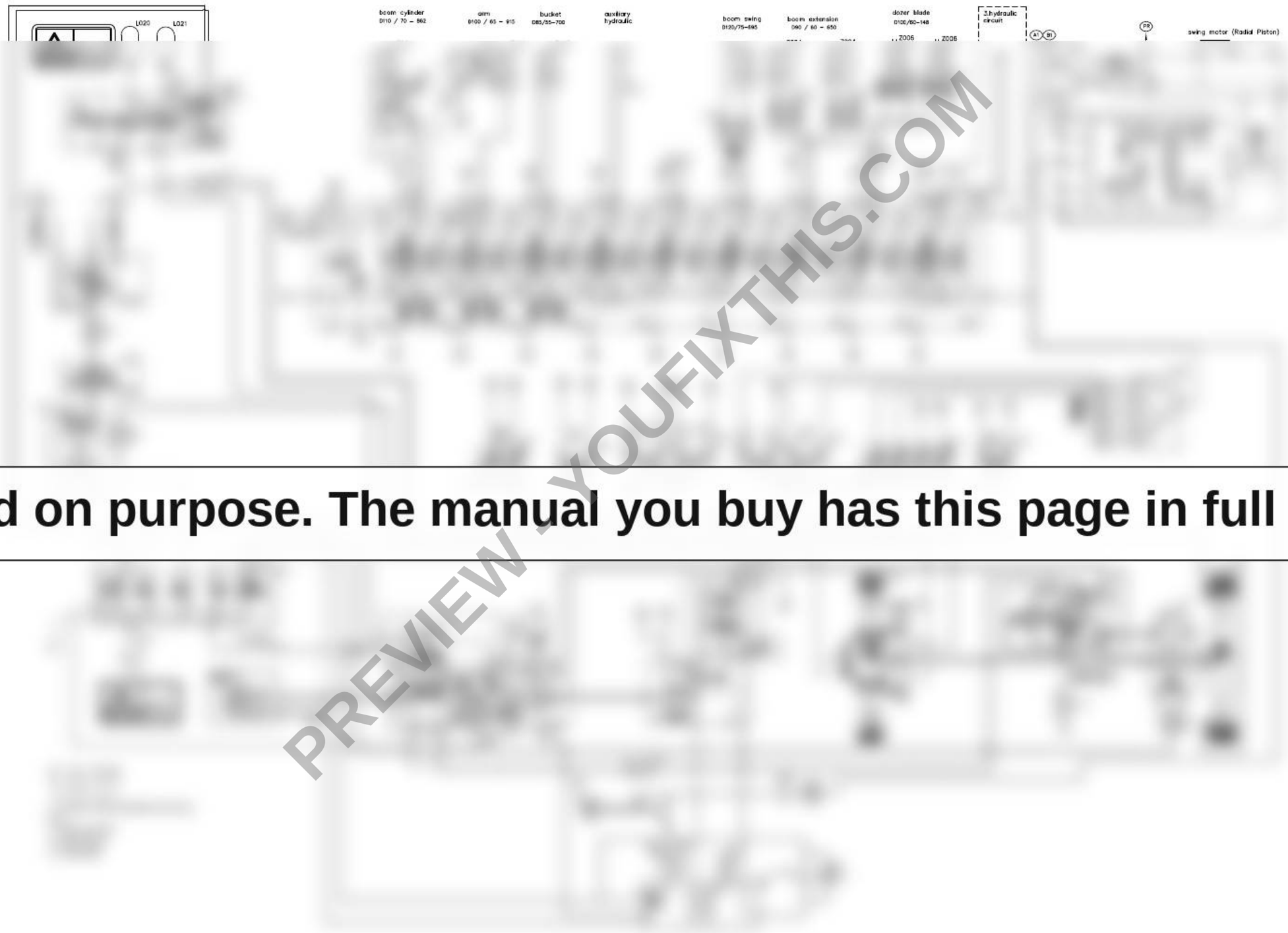

PREVIEW - YOUFIXTHIS.COM

Blurred on purpose. The manual you buy has this page in full quality.

Download full manual at youfixthis.com



PREVIEW - YOUFIXTHIS.COM

Blurred on purpose. The manual you buy has this page in full quality.

Download full manual at youfixthis.com

12 Diagnosis code list (SPN)

Notice!

Contact technical support if the display element displays error codes (SPNs) that are not in the following list!

Designation	BMK
Sensors, signal transmitters (electrical system)	B
Supply contacts (electrical system)	BAT
Control valves (hydraulics)	C
Electronics (electrical system)	D
Lights (electrical diagram)	E
Fuse (electrical system)	F
Supply (electrical system)	G
Ground (electrical system)	GND
Indicator lights (electrical system)	H
Jumper link (electrical system)	Y
Relays (electrical system)	K
Auxiliary components (hydraulics)	L
Drives (electrical system)	M
Electronics (electrical system) (20 x per control unit)	N
Instruments (electrical system)	P
Filters (hydraulics)	Q
Resistors (electrical system)	R
Switches (electrical system)	S
Connection points	SP
Units (hydraulics)	T
Amplifier (electrical system)	V
Diodes (electrical system)	V
Antenna (electrical system)	W
Connectors (electrical system)	X
Socket (electrical system)	XX
Solenoids (electrical system)	Y
Cylinders (hydraulics)	Z

Designation	BMK	SPN range	Controller	Source address [hex]
Start procedure				
Starter plus 2 not available	-	17		
Starter was actuated for longer than 15 seconds	-	18		
Module N16 does not respond (no power supply)	-	19		
Engine – Perkins/Deutz			**Also refer to Electronics N**	
Engine error (diesel engine electronics)	N005	27-6000		
Contact the technical support for detailed engine failure information (SPN)!				

PREVIEW - YOUFIXTHIS.COM

Download full manual at youfixthis.com

2.13 Tightening torques

Model-specific tightening torques

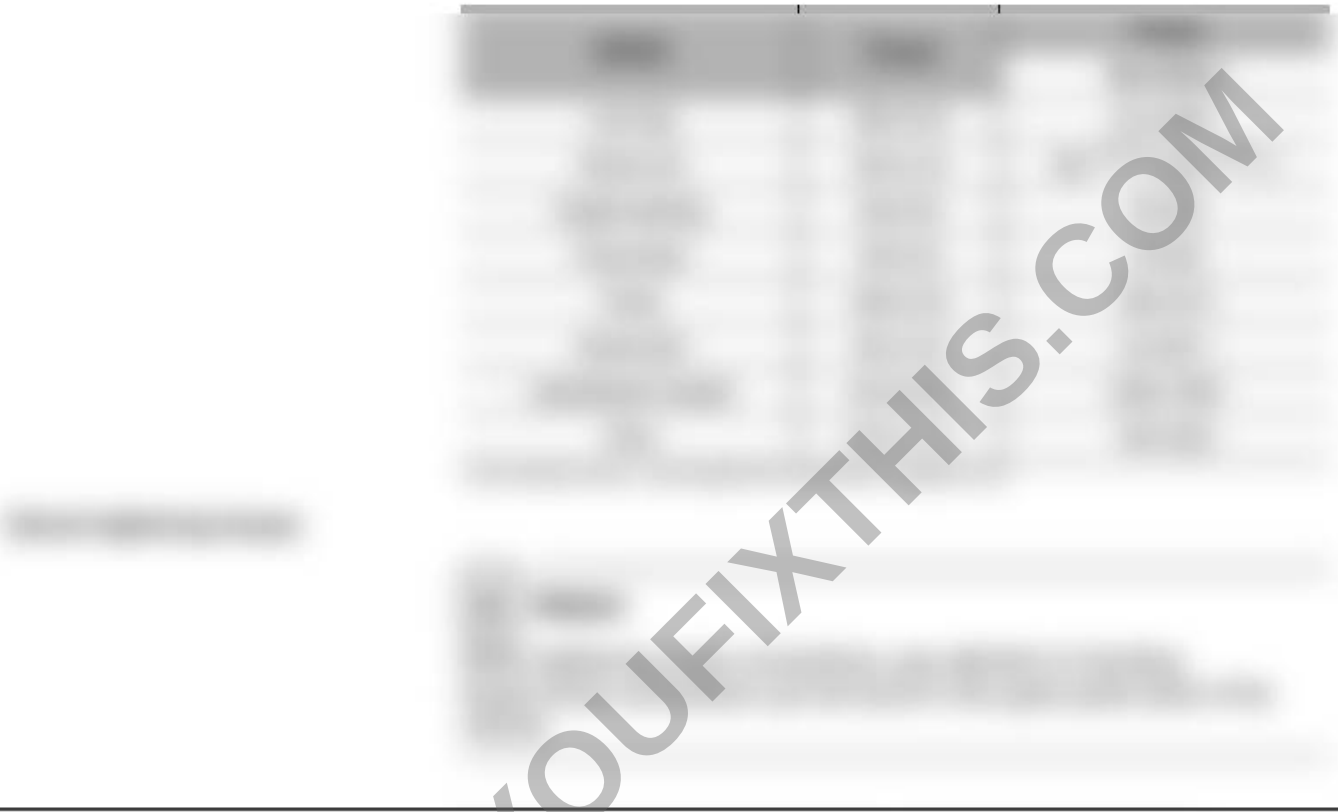

Blurred on purpose. The manual you buy has this page in full quality.



PREVIEW - YOUFIXTHIS.COM

Download full manual at youfixthis.com

3.6 Maintenance plan

Daily maintenance (operator)		
Symbol	**Inspection work** (Check the following fluids and lubricants, check the oil levels after a test run and add oil if necessary)	Page
	Check the fluids and lubricants (engine oil, engine coolant, hydraulic oil)	*3-31*, *3-36*, *3-65*
	Check the radiators (for example water, hydraulic oil) for dirt, clean them if necessary	*3-39*
	Check the charge-air cooler for dirt, clean it if necessary	*3-39*
	Check the fuel radiator for dirt, clean it if necessary	*3-39*
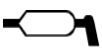	Lubricate the vehicle according to the lubrication schedule	*3-74*
	Check the engine air intake	*3-44*
	Check pin lock	--
	Check line fixtures	--
	Check the indicator lights and acoustic warning device	--
	Check the service and parking brake function	--
	Check the swivel unit brake for correct function	--
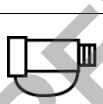	Check the hydraulic couplings for dirt	--
	Check the threaded fittings of the protective structures (for example the cabin) for tightness[1]	--
	Clean the lights/light system, signaling system	--

PREVIEW - YOUFIXTHIS.COM

Download full manual at youfixthis.com

Table of contents

Operation

Notices on this service manual 1-2
Identification of warnings and dangers 1-3
Explanation of symbols and abbreviations 1-3
Abbreviations 1-4
Conversion table 1-5
Warranty and liability 1-6
Exemption from warranty and liability 1-6
Labels 1-7
Type labels 1-7
Machine overview 1-11
Engine compartment (overview) 1-12
Chassis overview 1-13
Battery master switch 1-14
Fire extinguisher 1-14

Technical data

Engine 2-2
Traveling drive/axles 2-3
Brakes 2-3
Tires 2-4
Steering system 2-4
Operating hydraulics 2-5
Travel speed 2-5
Electrical system 2-6
Electrical components 2-6
Fuses 2-6
Relays 2-7
Bulbs 2-8
Auxiliary hydraulics performance measurement 2-8
Payload/stability 2-8
Hose identification code 2-8
Tightening torques 2-9
Model-specific tightening torques 2-9
General tightening torques 2-9
Powertilt (option) 2-15
Coolant 2-15
Compound table 2-15
Noise emissions 2-15
Vibrations 2-15
Weight 2-16
Machine weight 2-16
Weight of attachments 2-16
Excavator forces 2-16
Ground clearance/ground pressure 2-16
Dimensions 2-17
EW100 triple articulation boom (overview) 2-17
EW100 one-piece boom (overview) 2-19
Kinematics 2-21
Measuring live ring tolerance 2-22

Maintenance

Information on maintenance 3-2
Responsibilities and prerequisites 3-2
Important safety instructions on maintenance 3-2

PREVIEW - YOUFIXTHIS.COM

Download full manual at youfixthis.com

Special tools 3-3
Fluids and lubricants 3-3
Oil types for hydraulic system (depending on temperature) 3-4
Oil types for diesel engine (depending on temperature) 3-4
Important information regarding operation with biodegradable oil 3-5
Maintenance overview 3-6
Maintenance label 3-6
Maintenance plan 3-8
Maintenance accesses 3-14
Engine cover 3-14
Rocker cover 3-15
Tilting the cabin 3-16
Lowering the cabin 3-18
Main fuse box 3-19
Battery cover 3-20
Maintenance door 3-20
Partition wall maintenance accesses 3-20
Maintenance access to the live ring screw connection (from serial number WNCE0606PPAL01135) 3-21
Interlocks 3-22
Fuel system 3-23
Important information regarding the fuel system 3-23
Diesel fuel specification 3-23
Refueling 3-23
Fuel prefilter with water separator 3-26
Emptying the water separator 3-26
Changing the fuel prefilter 3-27
Replacing the fuel filter 3-27
Bleeding the fuel system 3-29
Emptying the fuel tank 3-30
Engine lubrication system 3-31
Important information regarding the engine lubrication system 3-31
Checking the engine oil level 3-32
Adding engine oil 3-32
Changing engine oil 3-33
Replacing the engine-oil filter cartridge 3-34
Cooling system 3-36
Important information regarding the cooling system 3-36
Check the coolant level 3-37
Adding coolant 3-37
Draining coolant 3-38
Cleaning the radiator 3-39
Checking the oil level in the compressor 3-40
Adding refrigerant to the air conditioning system (option) 3-41
Air filter 3-42
Important information regarding the air filter 3-42
Air filter monitoring 3-42
Replacing the air filter 3-42
Checking the air intake 3-44
Replacing the cabin air filter 3-44
Washer system 3-45
Checking the fluid level and adding fluid 3-45
V-belt 3-46
Checking V-belt tension 3-46
Replacing the V-belt 3-47
Checking the V-belt of the air conditioning system (option) 3-48
Replacing the V-belt of the air conditioning system (option) 3-49

PREVIEW - YOUFIXTHIS.COM

Download full manual at youfixthis.com

2.19 Dimensions

EW100 triple articulation boom (overview)

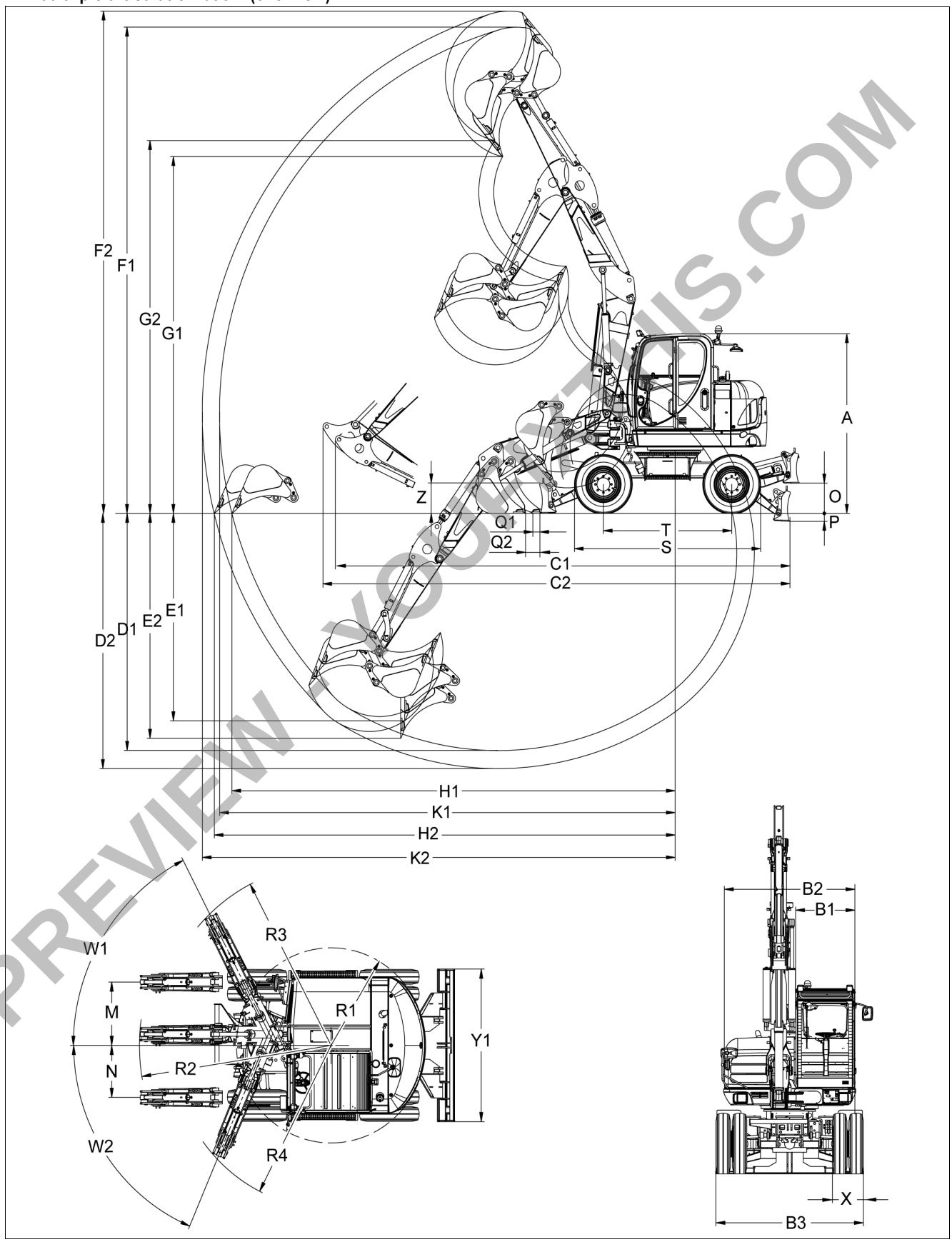

PREVIEW - YOUFIXTHIS.COM

Download full manual at youfixthis.com

Changing engine oil

Caution!

Caution when draining hot engine oil –

Burn hazard!

☞ *Wear protective gloves*

☞ *Use suitable tools*



Fig. 64: Oil drain plug

☞ *Let the engine run until it reaches its operating temperature (oil temperature about 80 °C/176 °F).*

☞ *Stop and park the vehicle Stop the engine See “Preparing lubrication”.*

☞ *Open the engine cover.*

☞ *Place a suitable container under oil drain plug **A**.*

☞ *Carefully unscrew oil drain plug **A** with a suitable tool.*

☞ If the machine is equipped withe service valve option, install the drain hose (supplied with the machine).

☞ *Completely drain the oil.*

☞ Replace the sealing ring of oil drain plug **A**.

☞ *Screw in oil drain plug **A** and tighten it to 34 Nm (25 ft.lbs).*

☞ *Clean the area around the oil filler cap with a lint-free cloth.*

☞ *Add fresh engine oil.*

☞ *Start the engine and let it run briefly at low speed.*

☞ *Stop the engine*

☞ *Wait about 5 minutes until all the oil has run into the oil sump.*

☞ *Check the oil level and add engine oil if necessary.*

☞ *Completely remove all oil spills from the engine.*

☞ *Close and lock the engine cover.*

Environment!

Use a suitable container to collect fluids and lubricants as they flow out and dispose of them in an environmentally friendly manner.

PREVIEW - YOUFIXTHIS.COM

Download full manual at youfixthis.com

Draining condensation water from the hydraulic oil reservoir

Check the hydraulic oil reservoir after a longer standstill or every 500 o/h. Drain the condensation water if there is any.

The hydraulic oil replacement interval must be shortened if the condensation water is not drained regularly.

Draining condensation water from the hydraulic oil reservoir

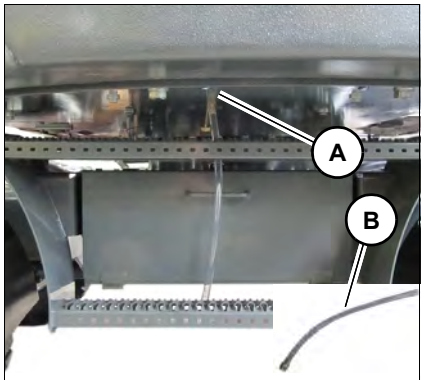

Fig. 122: Service valve and drain hose

- ☞ *Park the machine. Stop the engine. See “Preparing lubrication”.*
- ☞ *Actuate the reservoir ventilation to release pressure.*
- ☞ *Place a suitable container under service valve **A**.*
- ☞ *Remove the protective cap from the service valve.*
- ☞ *Install drain hose **B** (supplied with the machine) onto service valve **A**.*
- ☞ *Drain the condensation water (mixed with hydraulic oil) until only pure hydraulic oil flows out.*
- ☞ *Remove the drain hose.*
- ☞ *Install the protective cap on the service valve.*
- ☞ *Check the hydraulic oil level.*
- ☞ *Add clean hydraulic oil.*
- ☞ *Close the hydraulic oil reservoir.*

Environment!

Use a suitable container to collect fluids and lubricants as they flow out and dispose of them in an environmentally friendly manner.

Replacing the boost-pressure filter

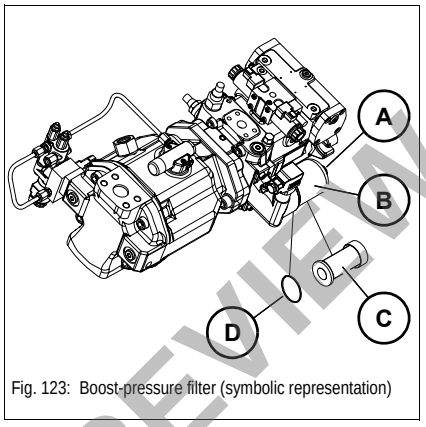

Fig. 123: Boost-pressure filter (symbolic representation)

- ☞ *Park the machine. Stop the engine. See “Preparing lubrication”.*
- ☞ *Actuate the reservoir ventilation to release pressure.*
- ☞ *Place a suitable container under the machine to collect the hydraulic oil as it flows out.*
- ☞ *Let the engine cool down.*
- ☞ *Open the engine cover.*
- ☞ *Remove fastening screw **A** with a suitable tool.*
- ☞ *Remove filter housing **B**.*
- ☞ *Remove the old filter element **C**.*
- ☞ *Insert the new filter element.*
- ☞ *Install filter housing **B** with a new sealing ring **D**.*
- ☞ *Install fastening screw **A** with a suitable tool.*
- ☞ *Close the engine cover.*
- ☞ *Dispose of the replaced filter element in an environmentally friendly manner.*

Environment!

Use a suitable container to collect fluids and lubricants as they flow out and dispose of them in an environmentally friendly manner.

PREVIEW - YOUFIXTHIS.COM

Download full manual at youfixthis.com

5 Travel drive

5.1 Traveling drive overview

Traveling drive 20 kph – A6VM150/71

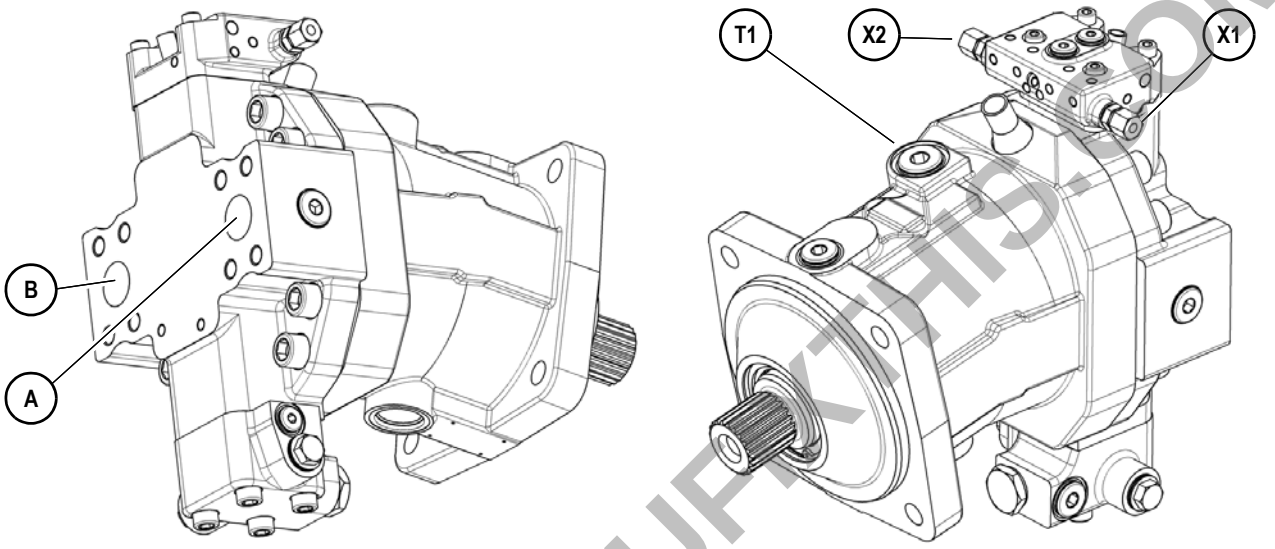

Item	Designation
T1	Leakage oil port
X1, X2	Control pressure connection
A, B	Work connections

PREVIEW - YOUFIXTHIS.COM

Download full manual at youfixthis.com

Pilot oil supply unit 20 kph (diagram)

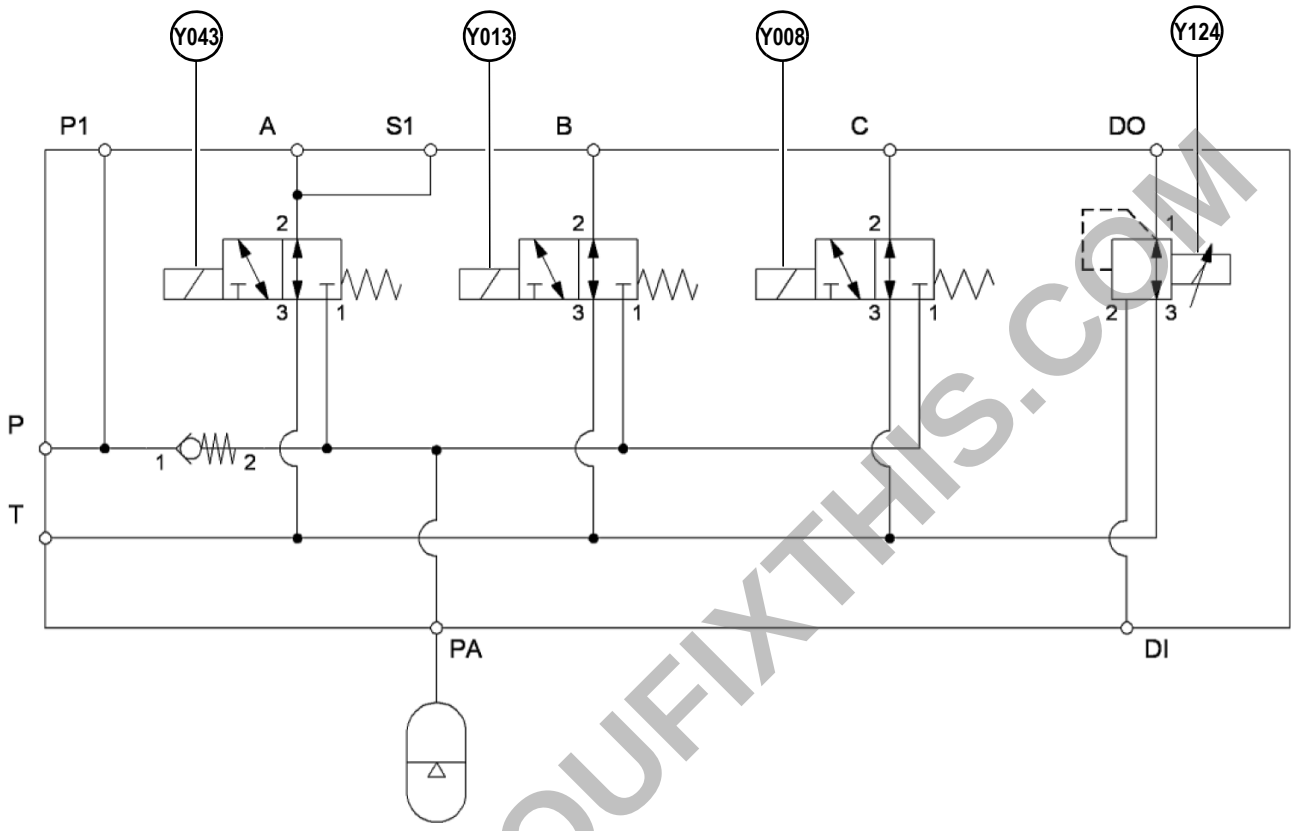

Item	Designation
A	Via swivel joint to parking brake cylinder
S1	“Parking brake” S11 pressure switch
B	To oil supply for distributing block
C	Via swivel joint to oscillating-axle cylinder
P1	To gear motor release supply
DI	From connection PS of hydraulic pump
DO	To connection Y of hydraulic pump
T	Reservoir line
P	Oil supply for connection G = P1 hydraulic pump
PA	Pressure accumulator
Y043	Parking brake solenoid valve
Y013	Joystick OFF pilot control safety valve
Y008	Oscillating axle interlock solenoid valve
Y124	“Drive” solenoid valve PVM

PREVIEW - YOUFIXTHIS.COM

Download full manual at youfixthis.com

4-fold stabilizer leg valve (option)

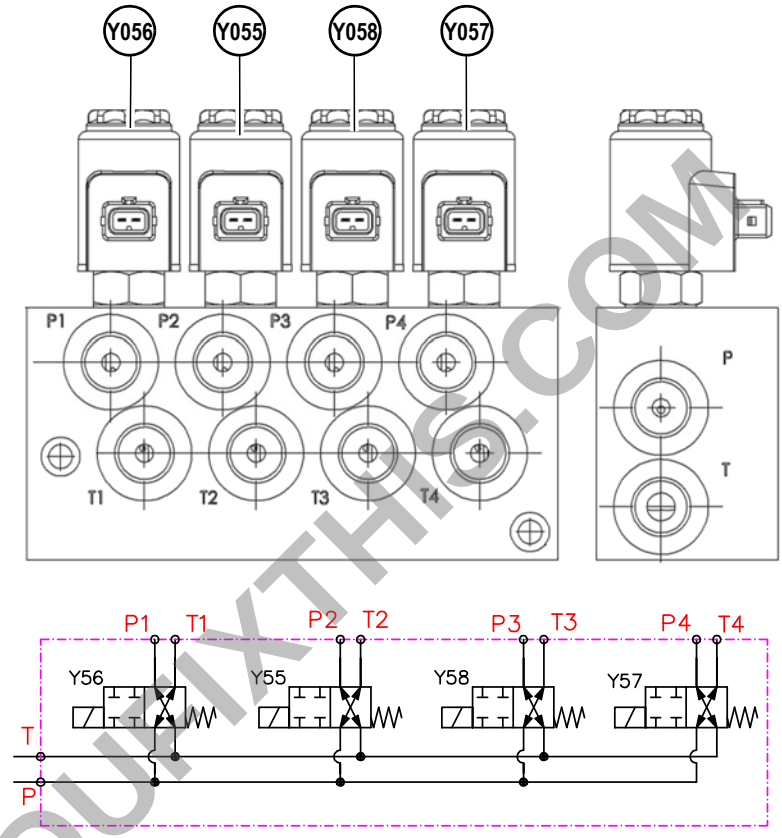

Item	Designation
P1	Stabilizer leg control (rod side) (rear right)
T1	Stabilizer leg control (base side) (rear right)
P2	Stabilizer leg control (rod side) (rear left)
T2	Stabilizer leg control (base side) (rear left)
P3	Stabilizer leg control (rod side) (front right)
T3	Stabilizer leg control (base side) (front right)
P4	Stabilizer leg control (rod side) (front left)
T4	Stabilizer leg control (base side) (front left)
Y055	Solenoid valve (rear left stabilizer leg)
Y056	Solenoid valve (rear right stabilizer leg)
Y057	Solenoid valve (front left stabilizer leg)
Y058	Solenoid valve (front right stabilizer leg)
P	Supply via connection “A8” of main valve block
T	Supply via connection “B8” of main valve block

PREVIEW - YOUFIXTHIS.COM

Download full manual at youfixthis.com

9.19 Switches wiring harness – version 2 (legend)

No.	From	To	mm²	Color	Function
8	X6/1	F19/H	4	rd	12 V 30
9	F18/G	F19/H	2.5	rd	12 V 30
10	F18/G	F17/F	2.5	rd	12 V 30
11	F16/E	F17/F	2.5	rd	12 V 30
12	F16/E	F15/D	2.5	rd	12 V 30
13	X6/1	F15/D	2.5	rd	12 V 30
14	X6/3	X15/13	2.5	rd	12 V 30
15	X6/3	S1/1	4	rd	12 V 30
17	F4/A	S1/5	2.5	rd-wh	12 V 15
18	F7/D	S1/6	2.5	rd-wh	12 V 15
19	F4/A	F5/B	1.5	rd-wh	12 V 15
20	F6/C	F5/B	1.5	rd-wh	12 V 15
21	F6/C	F7/D	1.5	rd-wh	12 V 15
23	X6/2	F12/A	1.5	rd-wh	12 V 15
24	X6/2	F14/C	1.5	rd-wh	12 V 15
25	F13/B	F12/A	1.5	rd-wh	12 V 15
26	F13/B	F14/C	1.5	rd-wh	12 V 15
29	XE1/23	S1/7	0.75	pk	Start
30	X5/2	S1/7	0.75	pk	Start
31	X5.1/2	X5.1/4	0.75	pk	Start
32	X1/1	X5/4	0.75	pk	Start
113	X1/6	XE2/58	0.75	wh	CAN high
117	X1/7	XE2/65	0.75	wh	CAN low
127	XF4	F4/1	0.75	rd-wh	12 V 15 ECM engine
128	XF4	XA1/20	0.75	rd-wh	12 V 15 ECM engine
129	XF4	X5/8	0.75	rd-wh	12 V 15 ECM engine
130	XF4	X5/14	0.75	rd-wh	12 V 15 ECM engine
131	XF4	XE90/6	0.75	rd-wh	12 V 15 ECM engine
132	X1/3	F4/1	0.75	rd-wh	12 V 15 ECM engine
133	XE4/7	F4/1	0.75	rd-wh	12 V 15 ECM engine
134	X7/1	F4/1	0.75	rd-wh	12 V 15 ECM engine
137	XF4	X4/1	0.75	rd-wh	12 V 15 ECM engine
142	XF4	N5/1	0.75	rd-wh	12 V 15 ECM engine
143	X5.1/10	X5.1/8	0.75	rd-wh	12 V 15 ECM engine
144	X1/2	X5/10	0.75	rd-wh	12 V 15 ECM engine
150	X1/9	XG1	0.75	pk	Charge indicator light
151	XA1/3	XG1	0.75	pk	Charge indicator light
152	XE90/5	XG1	0.75	pk	Charge indicator light
155	X2/1	XA1/6	0.75	og	Fuel sensor
160	F15/4	XE1/1	1.5	rd-wh	12 V 15 ECU N4
161	F15/4	XE1/27	1.5	rd-wh	12 V 15 ECU N4
162	F15/4	XE1/28	1.5	rd-wh	12 V 15 ECU N4
165	F5/2	XE1/15	0.75	rd-wh	12 V switch
167	F5/2	X7/4	0.75	rd-wh	12 V switch
168	F5/2	S22/5	0.75	rd-wh	12 V switch
169	S73/6	S22/5	0.75	rd-wh	12 V switch
170	S73/6	S24/5	0.75	rd-wh	12 V switch
171	S24/10	S24/5	0.75	rd-wh	12 V switch
172	S24/10	S80/5	0.75	rd-wh	12 V switch
173	S80/10	S80/5	0.75	rd-wh	12 V switch
174	S80/10	S21/5	0.75	rd-wh	12 V switch
175	S21/10	S21/5	0.75	rd-wh	12 V switch
176	S21/10	S42/5	0.75	rd-wh	12 V switch
177	S42/10	S42/5	0.75	rd-wh	12 V switch
189	X25/2	F5/2	0.75	rd-wh	12 V switch
198	X8/14	XE1/50	0.75	gn	Safety switch NO
199	X7/5	XE1/49	0.75	gn	Safety switch NC
200	S22/7	S22/B	0.75	bl	Road travel
201	S22/7	XE1/20	0.75	bl	Road travel
202	S22/2	XE1/8	0.75	bl	Work position
203	S22/4	XE1/19	0.75	bl	Front axle steering
204	S73/8	XE1/18	0.75	bl	4 wheel steering
205	S73/1	XE1/44	0.75	bl	Crab steering
206	S24/8	XE1/17	0.75	bl	Oscillating-axle interlock NC
206A	S24/1	S24/B	0.75	bl	Oscillating-axle interlock
207	S24/2	XE1/47	0.75	bl	Oscillating-axle interlock NO
208	S21/1	S21/B	0.75	bl	2nd speed
209	S21/1	XE2/64	0.75	bl	2nd speed
210	S42/1	S42/B	0.75	gn	Overload
211	S42/1	X2/4	0.75	gn	Overload
214	S42/10	XE1/9	0.75	rd-wh	12 V switch
217	X7/6	XE1/45	0.75	gn	Hydraulic quickhitch

PREVIEW - YOUFIXTHIS.COM

Download full manual at youfixthis.com

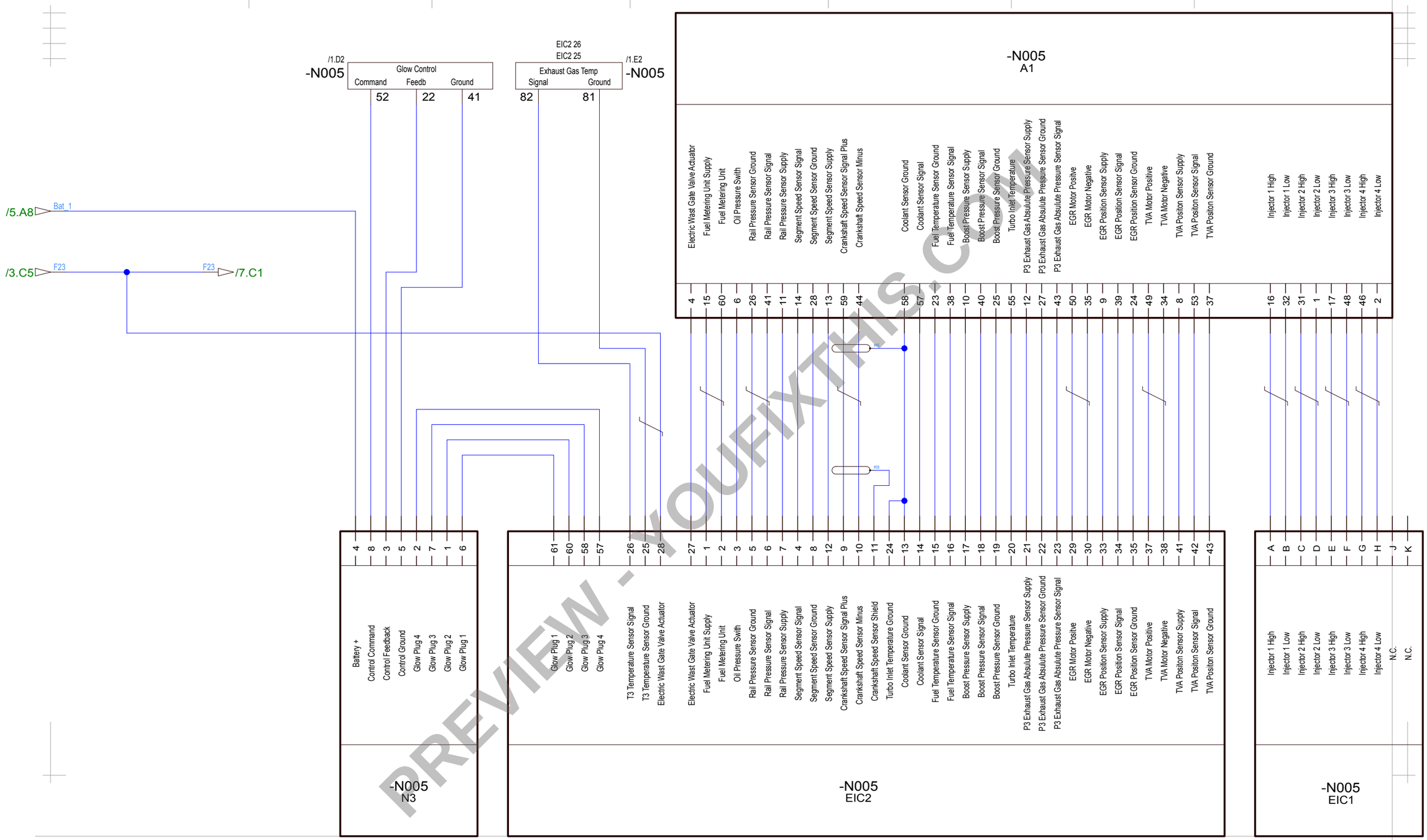

PREVIEW - YOUFIXTHIS.COM

WACKER NEUSON
Wacker Neuson Linz GmbH
Flughafenstraße 7 / A- 4063 Hörsching
Tel.: +43 / (0)7221 63000
Fax: +43 / (0)7221 63000-6000

Diese Zeichnung darf ohne unsere ausdrückliche Genehmigung weder vervielfältigt, noch dritten Personen oder Mitbewerbern im Original oder als Kopie ausgehändigt werden. Eigentums- und Urheberrecht vorbehalten.

Dieselmotor
ED_EW100

Mat.-Nr. 1000300739

Doc.-Nr. 2060035159_04

A3

Download full manual at youfixthis.com

11.5 “Hose burst valve” safety feature

Danger!

The “Hose burst valve” safety feature is activated as soon as a hose or a pipe bursts –

Accident hazard!

☞ *Have damage to the hydraulic system and to the hose burst valve itself immediately repaired and checked by technical personnel with suitable training*

Notice!

In the event of a bursting hose or pipe, the “Hose burst valve” safety feature prevents the boom from being lowered or dumped out without being braked.

☞ *Stop and park the vehicle Stop the engine See “Preparing lubrication”.*

☞ *Secure the machine and the attachment.*

Environment!

Use a suitable container to collect fluids and lubricants as they flow out and dispose of them in an environmentally friendly manner.

PREVIEW - YOUFIXTHIS.COM

Download full manual at youfixthis.com

PREVIEW ONLY

You're viewing 18 of 382 pages

The full manual includes:

- All 382 pages, complete
- Searchable PDF (find any keyword)
- No watermarks
- Instant download
- Print-ready quality

GET FULL MANUAL NOW

Wacker Neuson EW100 Service Manual

Scan or click anywhere
youfixthis.com

Click anywhere on this page to get the full manual