2 Technical data

2.1 Engine

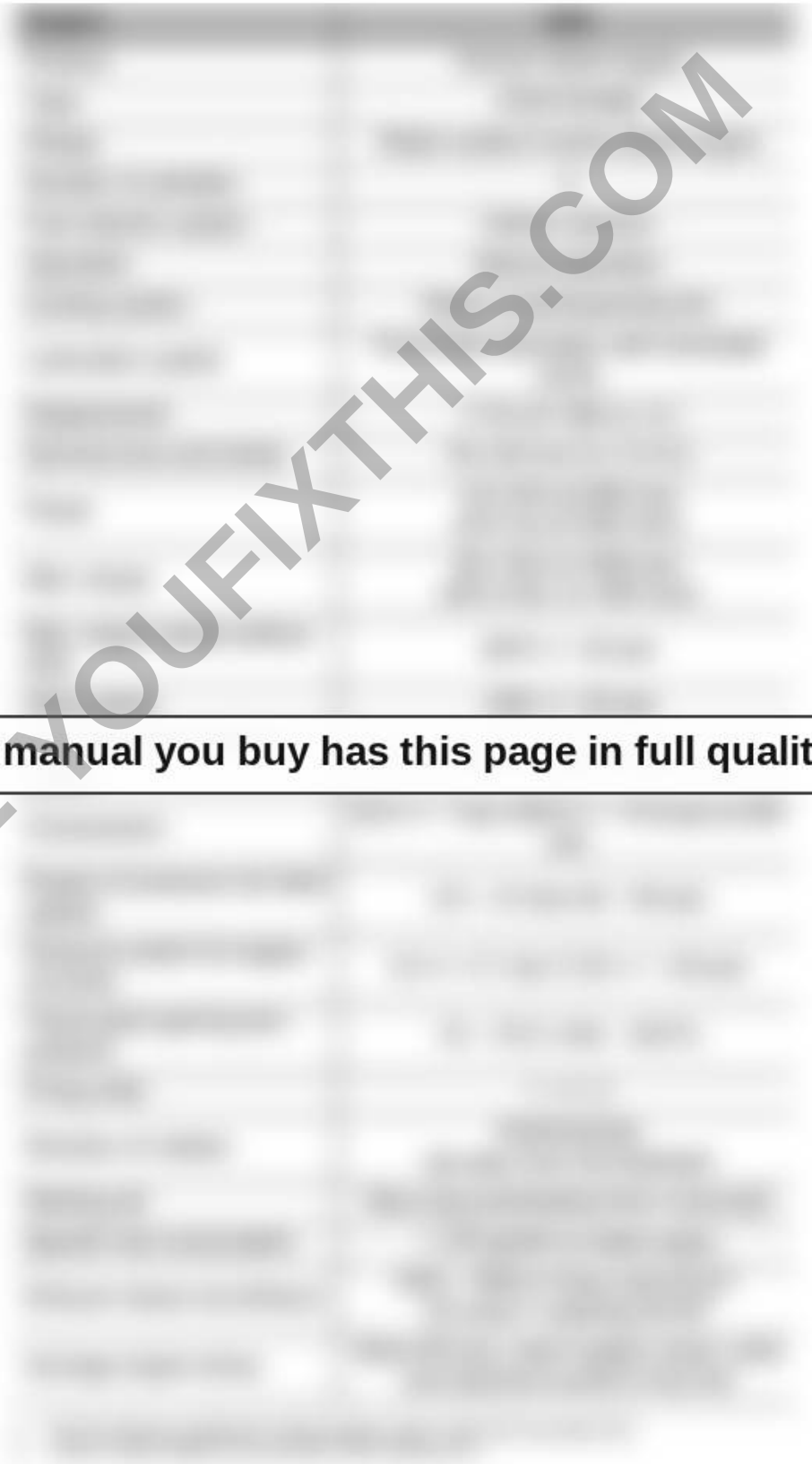

Blurred on purpose. The manual you buy has this page in full quality.

PREVIEW - YOUFIXTHIS.COM

Download full manual at youfixthis.com

3.6 Maintenance plan

Daily maintenance (operator)		
Symbol	**Inspection work** (Check the following fluids and lubricants, check the oil levels after a test run and add oil if necessary)	Page[1]
	Check the fluids and lubricants (engine oil, engine coolant, hydraulic oil)	--
	Check the radiator and hydraulic oil cooler for dirt, clean them if necessary	--
	Lubricate the vehicle according to the lubrication schedule	--
	Check the dirt indicator on the air filter	--
	Check the water separator and fuel filter on sight glass; drain water if necessary	--
	Check the track tension and retension the tracks if necessary	--
	Check the engine air intake	--
	Check the pin locks	--
	Check line fixtures	--
	Check the indicator lights and acoustic warning devices	--
	Check the swivel unit brake for correct function	--
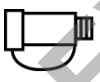	Check the hydraulic couplings for dirt	--
	Check the threaded fittings of the protective structures (cabin, for example) for tightness	--
	Clean the lights/light system, signaling systems	--
	Safe load indicator: check the acoustic warning system	--
	Hydraulic quickhitch (Easy Lock): check the acoustic warning system	--

PREVIEW - YOUFIXTHIS.COM

Download full manual at youfixthis.com

Changing engine oil

CAUTION

There is a risk of burn when handling hot engine oil!

Can cause serious injury.

- ► Always use appropriate protective equipment, protective gloves, for example!
- ► No smoking, no fire!

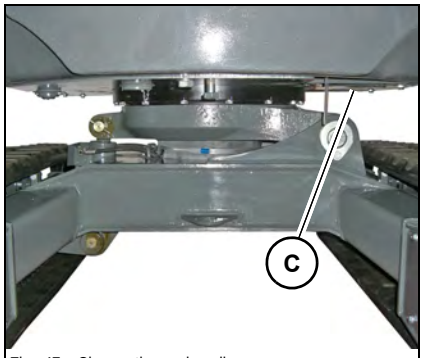

Fig. 47: Change the engine oil

1. Let the engine run until it reaches its operating temperature (oil temperature about 80°C/176°F).
2. Stop and park the vehicle. Stop the engine – *see Preparing lubrication on page 3-67.*
3. Place a suitable container under oil drain plug **C**.
4. Unscrew oil drain plug **C**.
5. If the machine is equipped withe service valve option, install the drain hose (supplied with the machine).
6. Completely drain the oil.
7. Screw oil drain plug **C** back on again.
8. Add fresh engine oil.
9. Start the engine and let it run briefly at low speed.
10. Stop the engine.
11. Wait until all the oil has run into the oil sump.
12. Check the oil level again.
13. Add if necessary and check again.
14. Completely remove all oil spills from the engine.

Environment

Use a suitable container to collect fluids and lubricants as they flow out and dispose of them in an environmentally friendly manner.

PREVIEW - YOUFIXTHIS.COM

Download full manual at youfixthis.com

7.2 Hydraulics diagram

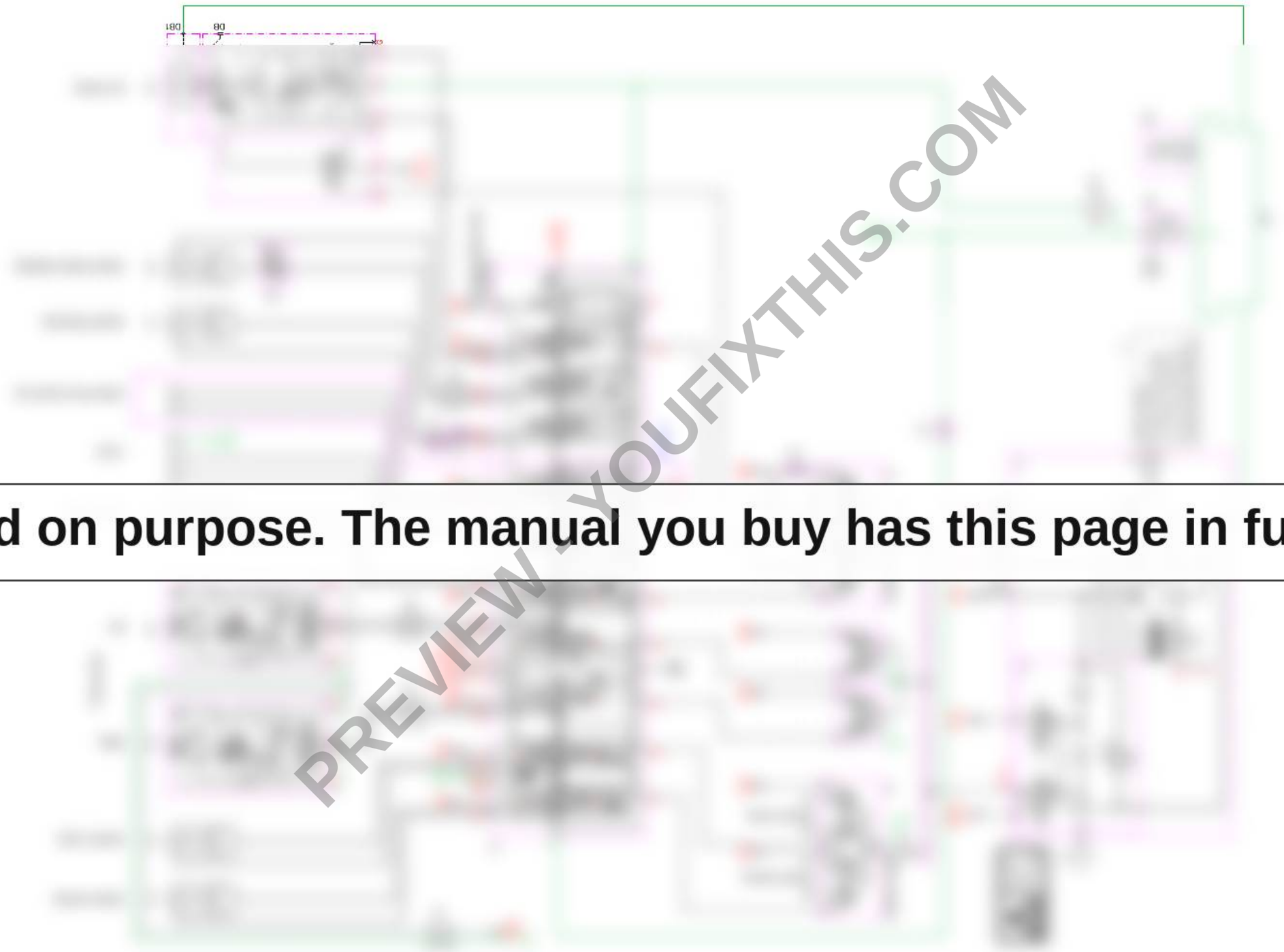

PREVIEW - YOUFIXTHIS.COM
Blurred on purpose. The manual you buy has this page in full quality.
Download full manual at youfixthis.com

7.5 Wiring diagram

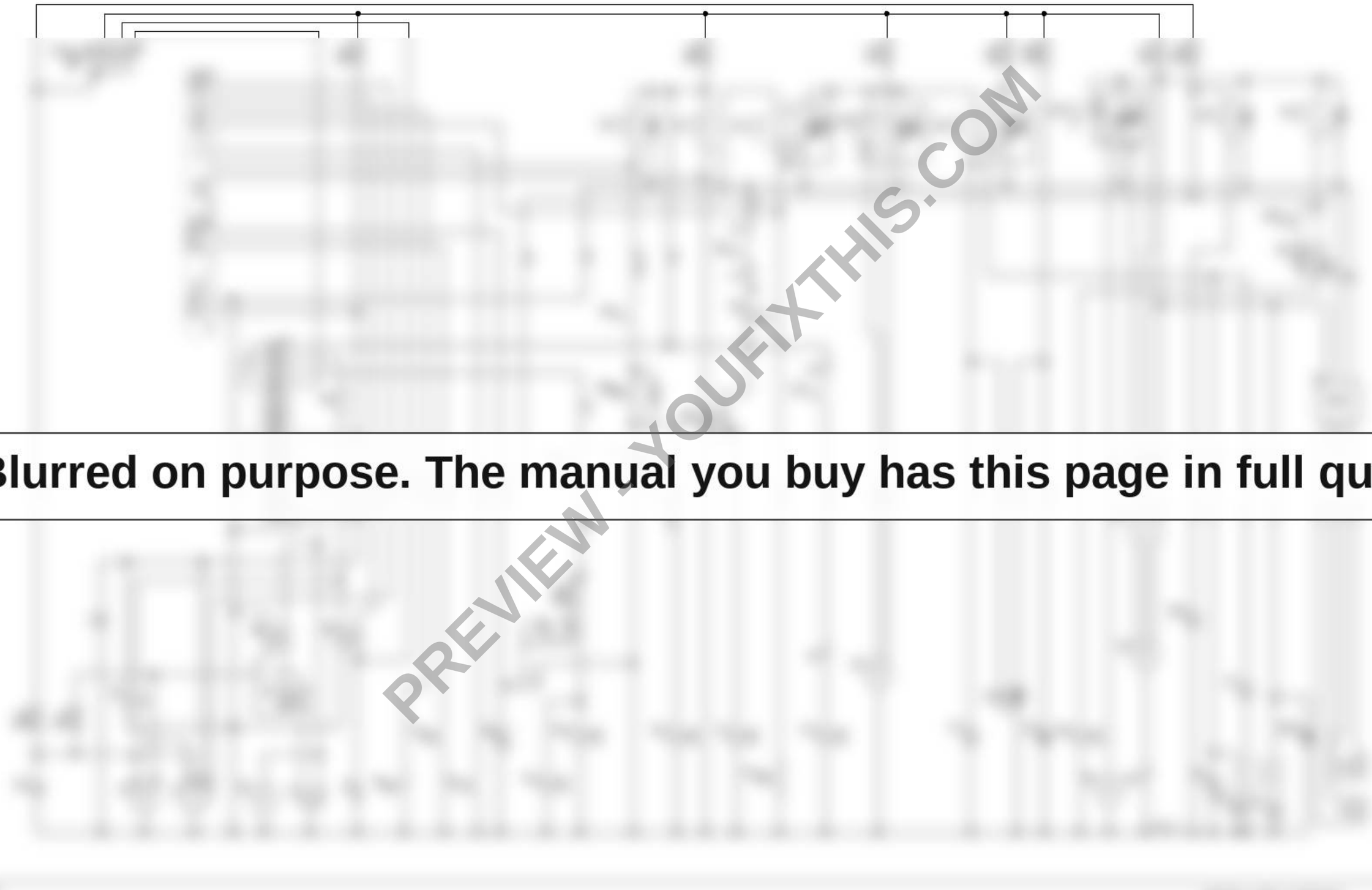

PREVIEW - YOUFIXTHIS.COM

Blurred on purpose. The manual you buy has this page in full quality.

Download full manual at youfixthis.com

2.17 Engine tightening torques

Tightening torques	EZ26

Blurred on purpose. The manual you buy has this page in full quality.

PREVIEW - YOUFIXTHIS.COM

Download full manual at youfixthis.com

Pump unit: exploded view

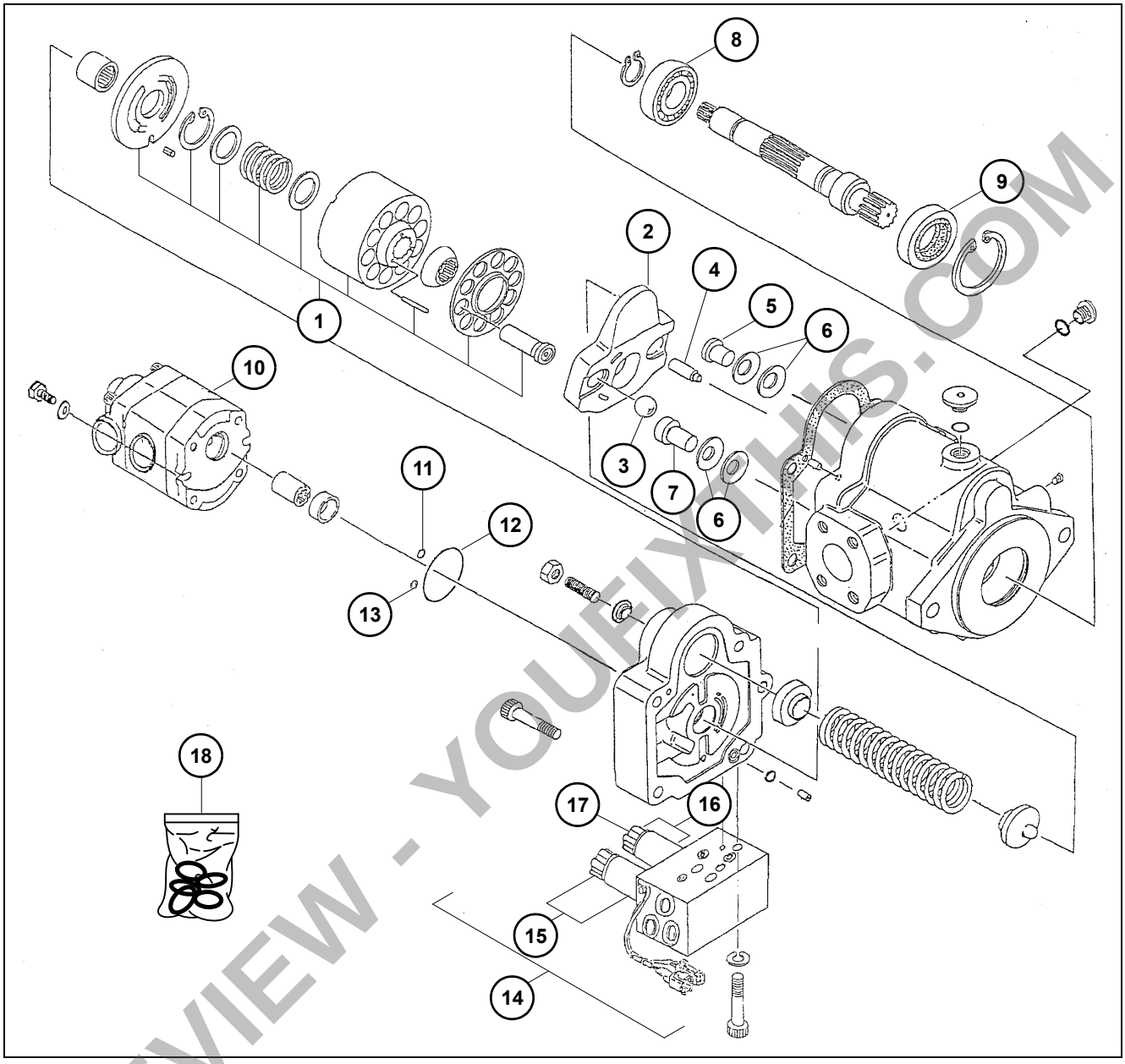

Item	Designation	Item	Designation
1	Drive unit	11	O-ring
2	Swash plate	12	O-ring
3	Ball	13	O-ring
4	Stop stud	14	Pilot oil supply unit
5	Stop pin	15	Solenoid switch
6	Spring	16	Solenoid switch
7	Stop pin	17	Fastening screw
8	Grooved ball bearing	18	Variable displacement pump sealing kit
9	Rotary shaft lip seal		
10	Gear pump		

PREVIEW - YOUFIXTHIS.COM

Download full manual at youfixthis.com

Table of Contents

1 Operation
1.1 Notices on this service manual ... 1-1
1.2 Identification of warnings and dangers ... 1-2
1.3 Explanation of symbols and abbreviations ... 1-3
1.4 Warranty and liability ... 1-6
1.5 Labels ... 1-7
1.6 Machine overview ... 1-10
1.7 Engine compartment ... 1-11
1.8 Valve compartment ... 1-12
1.9 Chassis overview ... 1-13
1.11 Parking the machine ... 1-15
1.12 Fire extinguisher ... 1-16
1.13 Towing the vehicle ... 1-17
1.14 Loading the vehicle ... 1-19
1.15 Transporting the vehicle ... 1-24

2 Technical data
2.1 Engine ... 2-1
2.2 Drive/axles ... 2-3
2.3 Tracks ... 2-3
2.4 Fuel injection pump ... 2-3
2.5 Brake/steering system ... 2-3
2.6 Hose identification code ... 2-3
2.7 Hydraulic system ... 2-4
2.8 Maximum speed ... 2-6
2.9 Coolant compound table ... 2-6
2.10 Ground clearance/ground pressure ... 2-6
2.12 Vibration ... 2-6
2.13 Electrical system ... 2-7
2.14 Weights ... 2-9
2.15 Noise emissions ... 2-10
2.16 Powertilt (option) ... 2-10
2.17 Engine tightening torques ... 2-11
2.18 Model-specific tightening torques ... 2-11
2.19 General tightening torques ... 2-12
2.20 Payload/lift capacity ... 2-15
2.22 Kinematics ... 2-20
2.23 Measuring live ring tolerance ... 2-21

3 Maintenance
3.1 Information on maintenance ... 3-1
3.2 Special tools ... 3-2
3.3 Fluids and lubricants ... 3-3
3.4 Important information regarding operation with biodegradable oil ... 3-5
3.5 Maintenance label ... 3-6
3.6 Maintenance plan ... 3-8
3.7 Overview of maintenance areas ... 3-13
3.8 Maintenance accesses ... 3-14
3.9 Fuel system ... 3-16
3.10 Washer system ... 3-24
3.11 Engine lubrication system ... 3-25
3.12 Cooling system ... 3-30
3.13 Air filter ... 3-34
3.14 Heating, ventilation and air conditioning system (option) ... 3-37
3.15 V-belt ... 3-38

PREVIEW - YOUFIXTHIS.COM

Download full manual at youfixthis.com

3.16 Emergency lowering 3-42
3.17 Releasing the pressure in the work hydraulics 3-42
3.18 Connecting and disconnecting hydraulic couplings 3-43
3.19 Pressure check 3-44
3.20 Test report 3-49
3.21 Hydraulic system 3-53
3.22 Checking the pilot control filter 3-60
3.23 Travel drive 3-61
3.24 Tires/tracks 3-63
3.25 Maintenance of attachments 3-66
3.26 Maintenance of options 3-66
3.27 Lubrication work 3-67
3.28 Electrical system 3-74
3.29 Cleaning and maintenance 3-79

4 Engine

4.1 Overview of engine 3TNV76-NNS (Tier IV final up to 2012) 4-1
4.2 Fuel system 4-3
4.3 Cooling system 4-4
4.4 Checking and adjusting valve clearance 4-5
4.5 Tightening order for cylinder head bolts 4-7
4.6 Checking the injection nozzles 4-8
4.7 Checking the nozzle jet 4-9
4.8 Injection time 4-9
4.9 Removing and installing the injection pump 4-13
4.10 Measuring and adjusting the engine speed 4-16
4.11 Compression 4-16
4.12 Checking the coolant thermostat 4-17
4.13 Checking the temperature sensor 4-17
4.14 Oil pressure switch 4-18
4.15 Checking the coolant circuit 4-18
4.16 Cleaning the cooling water channels 4-18
4.18 Crankcase vent 4-19
4.20 Engine malfunctions 4-20
4.21 Overview of engine 3TNV80F-SNNS (Tier IV final from 2012) 4-22
4.22 Fuel system 4-25
4.23 Cooling system 4-26
4.24 Altitude-dependent output reduction 4-27
4.25 Checking and adjusting valve clearance 4-28
4.26 Tightening order for cylinder head bolts 4-30
4.27 Checking the injection nozzles 4-31
4.28 Checking the nozzle jet 4-32
4.29 Injection time 4-32
4.30 Removing and installing the injection pump 4-36
4.31 Measuring and adjusting the engine speed 4-40
4.32 Compression 4-40
4.33 Checking the coolant thermostat 4-41
4.34 Checking the temperature sensor 4-41
4.35 Oil pressure switch 4-42
4.36 Checking the coolant circuit 4-42
4.37 Cleaning the cooling water channels 4-43
4.38 Coolant and fuel hoses 4-43
4.39 Crankcase vent 4-44
4.40 Replacing the glow plugs 4-44
4.41 Engine malfunctions 4-45

5 Hydraulic system

5.1 Hydraulic pump 5-2

PREVIEW - YOUFIXTHIS.COM

Download full manual at youfixthis.com

Replacing the fuel filter

WARNING

All work involving fuel carries an increased risk of explosion and fire!

Can cause serious injury or death.

- ► Bleed the fuel system only if the engine is cold.
- ► Wear protective equipment.
- ► Never perform work on the fuel system near open flames or sparks.
- ► Do not smoke.
- ► Keep the maintenance area clean.

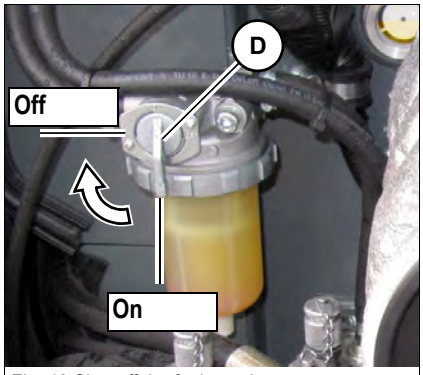

Fig. 42 Shut off the fuel supply

1. Stop and park the vehicle. Stop the engine – *see Preparing lubrication* on page 3-67.
2. Open the engine cover.
3. Turn ball-type cock **D** on the water separator to the **OFF** mark.
   ➥ Fuel supply is closed.

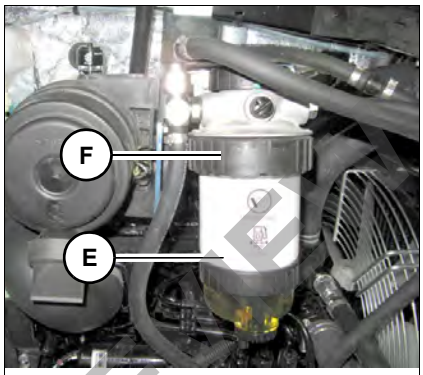

Fig. 43 Replace the fuel filter

4. Empty fuel filter **E** – *see Emptying the water separator on the fuel filter* on page 3-22.
5. Unscrew union nut **F**.
6. Remove the housing.
7. Remove the old filter insert.
8. Put the new filter insert in place.
9. Fit the housing back on again (apply a thin coat of oil or diesel fuel to the sealing surface).
10. Turn ball-type cock **D** on the water separator to the **ON** mark (vertical).
11. Bleed the fuel system – *see Bleeding the fuel system* on page 3-19.
12. Check the filter for tightness after a short test run.
13. Dispose of the old filter insert in an environmentally friendly manner

Environment

Use a suitable container to collect fluids and lubricants as they flow out and dispose of them in an environmentally friendly manner.

PREVIEW - YOUFIXTHIS.COM

Download full manual at youfixthis.com

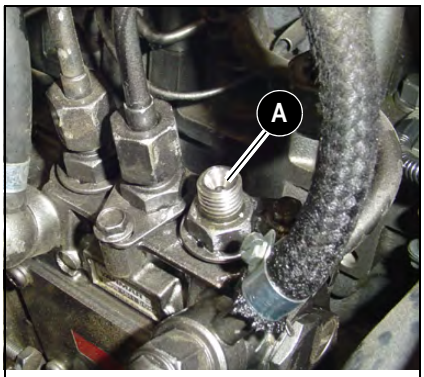

Fig. 126 Opening on fuel pump

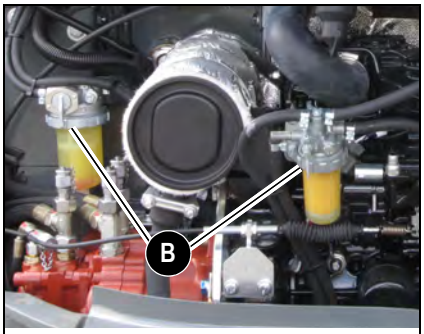

Fig. 128 Turning the fuel cocks to flow


Fig. 129 Measuring equipment

Measurement:

1. Loosen the high-pressure fuel injection lines of cylinder 1 and push to one side.
   ➥ The opening of injection pump **A** must be visible.
2. Open all fuel cocks **B**. See *fig. 131.*

Information

Fuel is pumped to the cylinder only every second turn of the crankshaft; for this reason it may be necessary to turn the crankshaft twice.

Information

An auxiliary means (fuel injection line with a transparent pipe) can be installed on the fuel injection line for precise observation – see *fig.* 132.

3. Position a spanner on the screw of the pulley (on the crankshaft).
   - Or turn the ring gear on the flywheel with a screwdriver.
4. Slowly turn clockwise until fuel is discharged from the opening of injection pump **A**.
5. Then slowly turn back approximately two more rotations until about 20° before top dead center.
6. Remove any bubbles at the opening of the injection pump with your finger so that the opening of the injection pump is about half full with fuel.
7. Slowly keep turning the crankshaft clockwise until the fuel level rises to the opening of injection pump **A**.
8. Stop the rotary motion immediately.
9. Read the degrees before top dead center by means of the indentation on the flywheel.
   ➥ Target: 16° +/- 1° before top dead center – *see Mark on flywheel* on page 4-10.
10. Measure the injection time two to three times.
    ➥ If the specified value is reached, the injection time is correct.
11. Refit the fuel injection line, cutoff solenoid and cap.
12. Check the fuel system for leaks.
    ➥ If the value varies from the specified value, the injection time must be adjusted.

Information

Bend the injection lines as you install them so they are not subject to tension once they are installed. Bleed the injection lines once they are installed.

PREVIEW - YOUFIXTHIS.COM

Download full manual at youfixthis.com

8/2 directional valve (option)

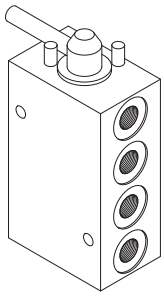

Fig. 215 8/2 Directional valve

The 8/2 directional valve is located at the left behind the seat.

The 8/2 directional valve can be switched between Operating Pattern A (ISO controls) and Operating Pattern B (SAE controls) – *see chapter 8.17 ISO/SAE controls* on page 8-20.

Hydraulic quickhitch valve (option)

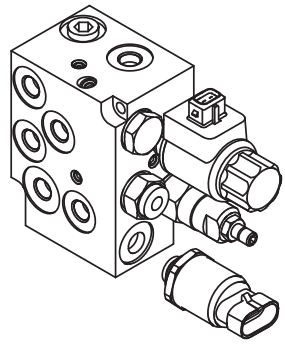

Fig. 216 Hydraulic quickhitch valve

The hydraulic quickhitch valve is located under the cabin floor – *see Chassis overview* on page 1-13.

The operating pressures are set with the hydraulic quickhitch valve – *see chapter 8.7 Hydraulic quickhitch valve* on page 8-8.

Operating pressure: P max = 350 bar (5076 psi)

Volumetric flow: Q max = 15 l/min (3.9 gal/min)

Hydraulic oil reservoir service valve

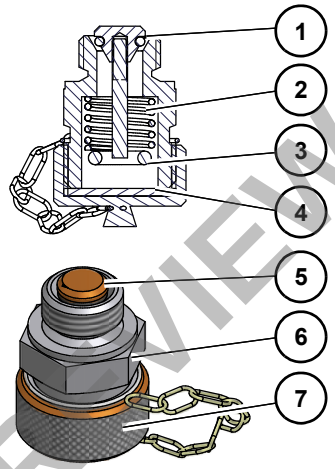

Fig. 217 Hydraulic oil reservoir service valve

Item	Description
1	O-ring
2	Pressure spring
3	Small cone
4	Sealing washer
5	Valve disk
6	Valve body
7	Protective cap

PREVIEW - YOUFIXTHIS.COM

Download full manual at youfixthis.com

PREVIEW ONLY

You're viewing 12 of 295 pages

The full manual includes:

- All 295 pages, complete
- Searchable PDF (find any keyword)
- No watermarks
- Instant download
- Print-ready quality

GET FULL MANUAL NOW

Wacker Neuson EZ26, E10-03 Service Manual

Scan or click anywhere
youfixthis.com

Click anywhere on this page to get the full manual