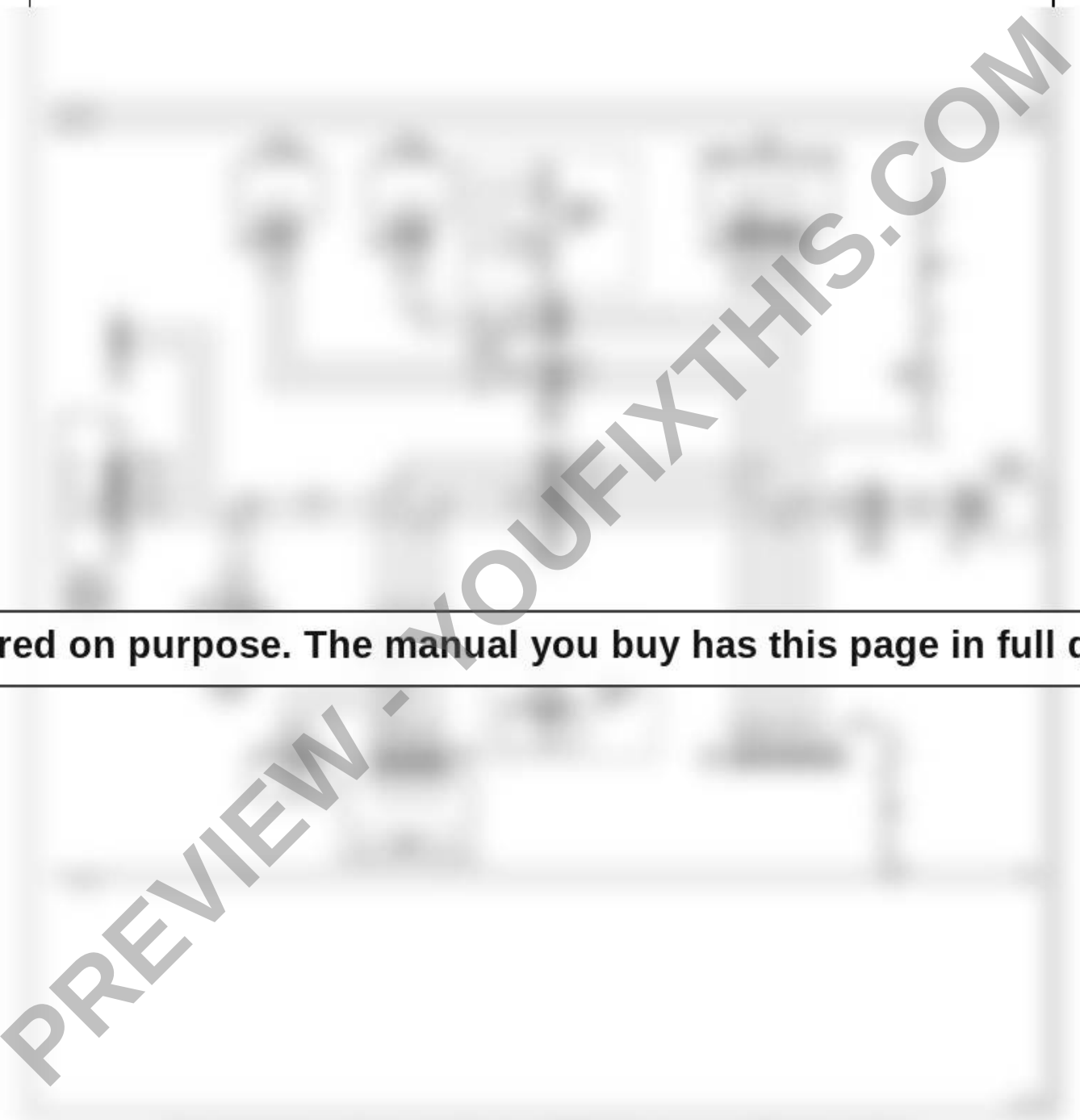

Blurred on purpose. The manual you buy has this page in full quality.

PREVIEW - YOUFIXTHIS.COM

Download full manual at youfixthis.com

Hydrostatic Power Train Schematics

Hydrostatic Schematic (Wheeled Machine with Electronic Controls)

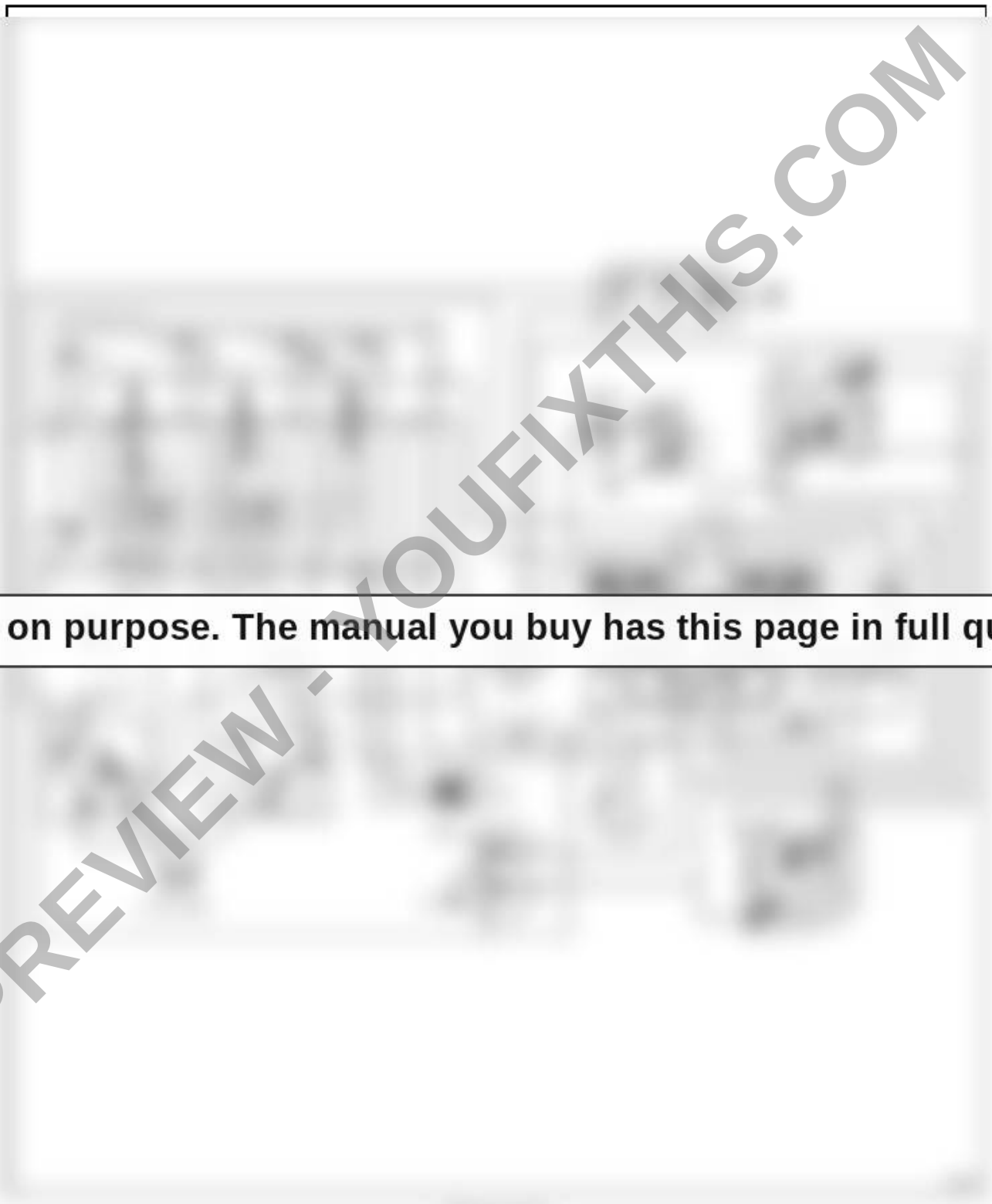

Blurred on purpose. The manual you buy has this page in full quality.

PREVIEW - YOUFIXTHIS.COM

Download full manual at youfixthis.com

Battery

Removal and Installation

See **Figures 2-140** and **2-141**.

WARNING

- **Battery posts, terminals, and related accessories contain lead and lead compounds. Wash your hands after handling.**
- **Always wear eye protection when servicing battery. Failure to follow appropriate safety precautions may result in death or serious injury.**

1. Park machine safely. (See "**Park Machine Safely**" on **page 15**.)
2. Open engine cover.

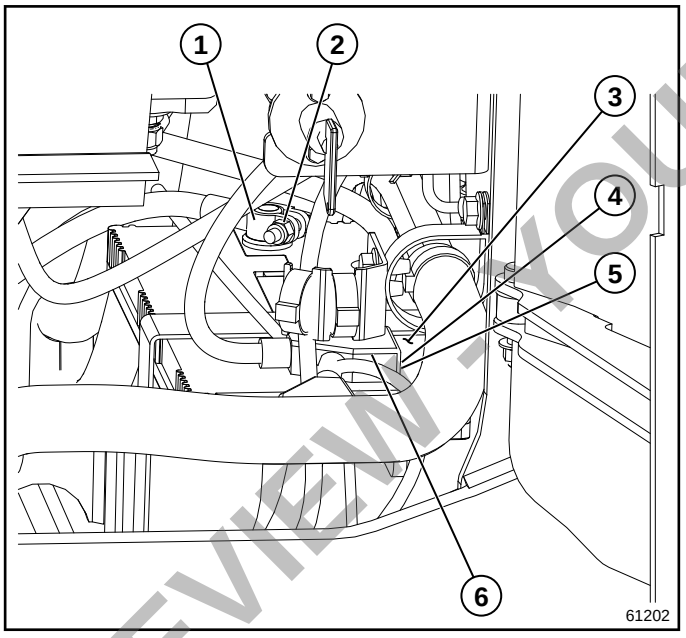

Figure 2-140: Battery Cable Removal and Installation

WARNING

Always disconnect the negative terminal first and positive terminal last. Connect positive terminal first and negative terminal last. Use care when testing live circuits to prevent arcing. Arcing could result in death or serious injury.

3. Loosen nut (2) and remove negative battery cable (1) from battery (3).
4. Remove boot (6) from positive battery cable (4).
5. Loosen nut (5) and remove positive battery cable (4) from battery (3).

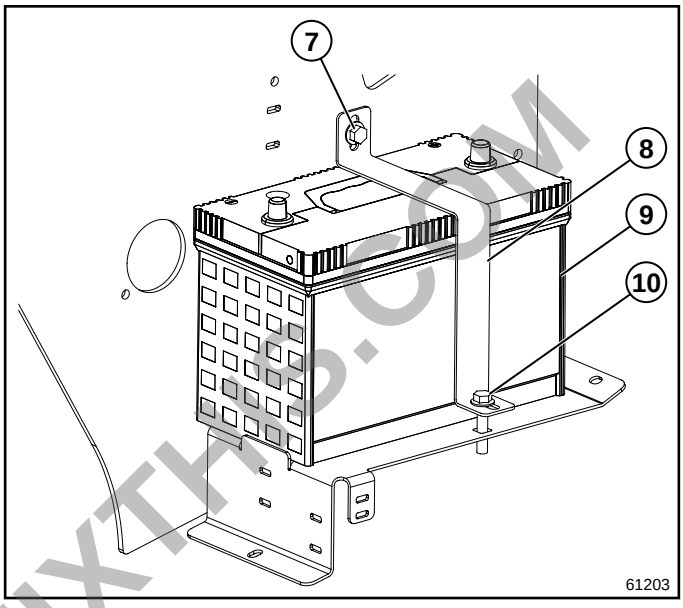

Figure 2-141: Battery Removal and Installation

6. Remove screw (7), bolt (10), and battery strap (8) from machine.

NOTICE

Never dispose of used batteries in garbage. Dispose of used batteries in accordance with all applicable regulations.

7. Remove battery (9) from machine.

Installation Note

Install the battery by reversing the order of removal.

Alternator

Removal and Installation

See **Figures 2-142** through **2-145**.

NOTE

Tag and mark electrical connectors and wiring prior to removal to ensure proper installation.

1. Park machine safely. (See "**Park Machine Safely**" on **page 15**.)
2. Open engine cover.

PREVIEW - YOUFIXTHIS.COM

Download full manual at youfixthis.com

Troubleshooting

Start Circuit

Symptom: Machine Does Not Start.

Probable Cause	Remedy
Faulty or weak battery (G1)	Check battery state of charge.
Faulty 100-amp main fuse (F000)	Replace 100-amp fuse. (See "**Removal and Installation**" on **page 2-230**.)
Loose or corroded battery cable ends and/or chassis grounds: GND01, GND02, GND04, GND05, and/or GND06	Check battery cable ends and/or chassis grounds for loose fit or corrosion.
Faulty or missing cab Power Distribution Module (PDM) fuse: key switch (F008)	Check fuses and replace with same specified current rating.
Faulty or missing chassis PDM fuse(s): starter (F017), engine (F018), and/or lift pump (F019)	Check fuses and replace with same specified current rating.
Faulty key switch (S001)	Test key switch. (See "**Key Switch Test**" on **page 2-201**.)
Faulty starter relay (K155)	Test starter relay. (See "**Relay Test**" on **page 2-200**.)
Faulty lift pump relay (K158)	Test lift pump relay. (See "**Relay Test**" on **page 2-200**.)
Faulty main power relay (K902)	Test main power relay. (See "**Relay Test**" on **page 2-200**.)
Loose or corroded connectors at starter solenoid and/or starter motor	Check for loose or corroded connectors at starter solenoid and/or starter motor. Repair as needed.
Faulty starter	Replace starter. (See"**Starter**" on **page 2-219**.)

PREVIEW - YOUFIXTHIS.COM

Download full manual at youfixthis.com

HYDAC HY TTC-77 SPN/FMI
Danfoss MC024-130 SPN/FMI

WN MFL Error Code List - 27APR2017

SPN	SPN Description	FMI	FMI Description
517006	B007 - Hydraulic Oil Temperature Sensor	28	Pin 260 Short to Power or Open Circuit
517006	B007 - Hydraulic Oil Temperature Sensor	4	Short to Ground
517117	B116 - Boom Foot Pedal Primary Signal	3	Short to Power
517117	B116 - Boom Foot Pedal Primary Signal	4	Short to Ground
517117	B116 - Boom Foot Pedal (Primary or Redundant)	26	Signal Out of Range
517118	B117 - Bucket Foot Pedal Primary Signal	3	Pin 112 Short to Power
517118	B117 - Bucket Foot Pedal Primary Signal	4	Pin 112 Short to Ground
517118	B117 - Bucket Foot Pedal (Primary or Redundant)	26	Pin 112_119 Signal Out of Range
517123	B116 - Boom Foot Pedal Redundant Signal	3	Pin 120 Short to Power
517123	B116 - Boom Foot Pedal Redundant Signal	4	Pin 120 Short to Ground
517124	B117 - Bucket Foot Pedal Redundant Signal	3	Pin 119 Short to Power
517124	B117 - Bucket Foot Pedal Redundant Signal	4	Pin 119 Short to Ground
517125	B120 - Thumbwheel - Proportional Hydraulics 1 (L/+) Signal	3	Pin 114 Short to Power
517125	B120 - Thumbwheel - Proportional Hydraulics 1 (L/+) Signal	4	Pin 114 Short to Ground
517125	B120 - Thumbwheel - Proportional Hydraulics (1 (L/+) or 2 (R/-))	26	Pin 114 120 Signal Out of Range
517126	B120 - Thumbwheel - Proportional Hydraulics 2 (R/-) Signal	3	Pin 123 Short to Power
517126	B120 - Thumbwheel - Proportional Hydraulics 2 (R/-) Signal	4	Pin 123 Short to Ground
517127	B121 - Charge Oil Pressure Sensor	3	Pin 142 Short to Power
518989	S040 - Hydraulic Coupler Switch	24	Pin 108 141 Logic Error
519014	S065 - Park Brake Switch	24	Pin 121 144 Logic Error
519131	S104 - Operator Presence Switch	24	Pin 255 256 Logic Error
519131	S104 - Operator Presence Switch	29	Pin 255 256 Software Evaluation Error
519164	S215 - Seat Belt Switch	24	Pin 145 150 Logic Error
519352	Y003 - Two Speed Valve	4	Pin 135 Short to Ground
519352	Y003 - Two Speed Valve	28	Pin 135 Short to Power OR Open Circuit
519369	Y020 - Ride Control Activate Valve	4	Pin 268 Short to Ground
519369	Y020 - Ride Control Activate Valve	28	Pin 268 Short to Power OR Open Circuit
519374	Y025 - Hydraulic Coupler Valve	5	Pin 271 Open Circuit
519374	Y025 - Hydraulic Coupler Valve	6	Pin 271 Short to Power OR Short to Ground
519384	Y035 - Cooling Fan Valve	4	Pin 136 Short to Ground
519384	Y035 - Cooling Fan Valve	28	Pin 136 Short to Power OR Open Circuit
519392	Y043 - Park Brake Valve	4	Pin 139 Short to Ground
519392	Y043 - Park Brake Valve	28	Pin 139 Short to Power OR Open Circuit
519504	Y156 - Pilot Cutoff Valve	4	Pin 275 Short to Ground
519504	Y156 - Pilot Cutoff Valve	28	Pin 275 Short to Power OR Open Circuit
519505	Y157 - Boom Down Valve	4	Pin 269 Short to Ground
519505	Y157 - Boom Down Valve	28	Pin 269 Short to Power OR Open Circuit
519505	Y157 - Boom Down Valve	26	Pin 269 Signal Out of Range
519506	Y158 - Bucket Dump Valve	4	Pin 140 Short to Ground
519506	Y158 - Bucket Dump Valve	28	Pin 140 Short to Power OR Open Circuit
519506	Y158 - Bucket Dump Valve	26	Pin 140 Signal Out of Range
519507	Y159 - Proportional Hydraulics 1 (L/+) Valve	4	Pin 138 Short to Ground
519507	Y159 - Proportional Hydraulics 1 (L/+) Valve	28	Pin 138 Short to Power OR Open Circuit
519507	Y159 - Proportional Hydraulics 1 (L/+) Valve	26	Pin 138 Signal Out of Range
519508	Y160 - Boom Up Valve	4	Pin 276 Short to Ground
519508	Y160 - Boom Up Valve	28	Pin 276 Short to Power OR Open Circuit
519508	Y160 - Boom Up Valve	26	Pin 276 Signal Out of Range
519509	Y161 - Bucket Curl Valve	4	Pin 161 Short to Ground
519509	Y161 - Bucket Curl Valve	28	Pin 161 Short to Power OR Open Circuit
519509	Y161 - Bucket Curl Valve	26	Pin 161 Signal Out of Range
519510	Y162 - Proportional Hydraulics 2 (R/-) Valve	4	Pin 137 Short to Ground
519510	Y162 - Proportional Hydraulics 2 (R/-) Valve	28	Pin 137 Short to Power OR Open Circuit
519510	Y162 - Proportional Hydraulics 2 (R/-) Valve	26	Pin 137 Signal Out of Range
519515	Y167 - High Flow Valve	5	Pin 273 Open Circuit
519515	Y167 - High Flow Valve	6	Pin 273 Short to Power OR Short to Ground
519516	Y168 - Ride Control Balance Valve	4	Pin 129 Short to Ground
519516	Y168 - Ride Control Balance Valve	28	Pin 129 Short to Power OR Open Circuit
519517	Y169 - Self Level Valve	4	Pin 130 Short to Ground
519517	Y169 - Self Level Valve	5	Pin 130 Short to Power OR Open Circuit
519527	K161 - 14-Pin Front Electric "C" Relay Coil	3	Pin 134 Short to Power
519527	K161 - 14-Pin Front Electric "C" Relay Coil	4	Pin 134 Short to Ground
519527	K161 - 14-Pin Front Electric "C" Relay Coil	5	Pin 134 Open Circuit
519528	K162 - 14-Pin Front Electric "D" Relay Coil	3	Pin 133 Short to Power
519528	K162 - 14-Pin Front Electric "D" Relay Coil	4	Pin 133 Short to Ground
519528	K162 - 14-Pin Front Electric "D" Relay Coil	5	Pin 133 Open Circuit
519529	K163 - 14-Pin Front Electric "E" Relay Coil	3	Pin 132 Short to Power
519529	K163 - 14-Pin Front Electric "E" Relay Coil	4	Pin 132 Short to Ground
519529	K163 - 14-Pin Front Electric "E" Relay Coil	5	Pin 132 Open Circuit
519530	K164 - 14-Pin Front Electric "F" Relay Coil	3	Pin 131 Short to Power
519530	K164 - 14-Pin Front Electric "F" Relay Coil	4	Pin 131 Short to Ground
519530	K164 - 14-Pin Front Electric "F" Relay Coil	5	Pin 131 Open Circuit

PREVIEW - YOUFIXTHIS.COM

Download full manual at youfixthis.com

Service Information

Fluids

Description	Specification	Capacity

Blurred on purpose. The manual you buy has this page in full quality.

PREVIEW - YOUFIXTHIS.COM

Download full manual at youfixthis.com

Service Schedule

	Hours												
	50	500	1000	1500	2000	2500	3000	3500	4000	4500	5000	5500	6000
Engine Oil and Filter [1]		X	X	X	X	X	X	X	X	X	X	X	X
Engine Air Filter (or as required by plugged filter indicator)		X	X	X	X	X	X	X	X	X	X	X	X
Hydraulic Filter	X		X		X		X		X		X		X
Hydraulic Oil			X		X		X		X		X		X
Chain Tank Oil			X		X		X		X		X		X
Main Fuel Filter [1]		X	X	X	X	X	X	X	X	X	X	X	X
Lift Pump Filter		X	X	X	X	X	X	X	X	X	X	X	X
Engine Antifreeze			X		X		X		X		X		X
Engine Water Pump Drive Belt[2]		X	X	X	X	X	X	X	X	X	X	X	X
Case Drain Strainer (clean)			X		X		X		X		X		X
Coolant Hoses											X		
Hydraulic Hoses[2]					X				X				X
SSL Drive Chain Tension (Check and adjust as needed)		X	X	X	X	X	X	X	X	X	X	X	X
CTL Track Tension (Check and adjust as needed)	X	X	X	X	X	X	X	X	X	X	X	X	X

[1] or 12 months if hours are not reached

[2] or 36 months if hours are not reached

PREVIEW - YOUFIXTHIS.COM

Download full manual at youfixthis.com

Notes
Special notes are given in order to draw attention to detailed instructions. These notes are intended to give further important information regarding the machine and/or a step in a procedure.

Troubleshooting
Troubleshooting charts are provided in each chapter to aid in the diagnostic process. Use these suggestions to aid in identifying a potential mechanical or machine adjustment problem.

Safety

Introduction

Safety is the most important element of any repair procedure. Knowledge of the procedure to be performed and safe work habits are essential to preventing death, personal injury, or property damage. Use the following statements as a common-sense guide to proper work and tool-use habits.

Preparing for the Job

Preparation is essential to complete a procedure in a safe and efficient manner.

Service Training

- Read and understand the instructions contained in all manuals delivered with the machine.
- Familiarize yourself with the location and proper use of all controls and safety devices.
- Only trained personnel shall troubleshoot or repair problems occurring with the machine. Contact Wacker Neuson for additional training if necessary.
- Visit http://www.wackerneuson.us/en/support-usa/technical-training.html for more information.

Repair Person Qualifications

- Work on the electric system and equipment on the undercarriage and the steering and brake systems may be performed only by skilled individuals who have been specially trained for such work.
- Work on the hydraulic system of the machine must be performed only by a technician with special knowledge and experience in hydraulic equipment.

Personal Protective Equipment (PPE)

Wear the following PPE while servicing or maintaining this machine:

- Close-fitting work clothes that do not hinder movement.
- Safety glasses with side shields.
- Hearing protection.
- Safety-toed footwear.
- In addition, before servicing or maintaining the machine:
  - Tie back long hair.
  - Remove all jewelry (including rings).

Personal Safety Measures

- Follow the specific safety instructions in this manual.
- Block or support the machine parts that may move or fall prior to making repairs.
- Apply special care when working on the fuel system due to increased risk of fire.
- Engine block and muffler system become very hot during operation and require cool-down time after machine is shut off. Avoid contact with hot parts.
- Retainer pins can fly out or splinter when struck with force. Use a brass hammer or a suitable material between the hammer and pin.
- Do not use starting fluid (for example, ether), especially in those cases in which a heater or glow plug (intake air pre-heating) is used at the same time to reduce the risk of explosions.
- Always use specially designed or otherwise safety-oriented ladders and operating platforms to perform overhead assembly work. Never use machine parts or attachments/superstructures as a climbing aid.

Precautions

- Read and understand the service procedures before performing any service on the machine.
- Remain aware of the machine's moving parts. Keep hands, feet, and loose clothing away from the machine's moving parts.
- Reinstall the safety devices and guards after repair and maintenance procedures are complete.

Cleaning

- Ensure the machine is clean and free of debris such as leaves, paper, cartons, etc.
- Ensure all labels are legible.
- Do not clean the machine while it is running.
- Never use gasoline or other types of fuels or flammable solvents to clean the machine. Fumes from fuels and solvents can become explosive.

PREVIEW - YOUFIXTHIS.COM

Download full manual at youfixthis.com

Chapter 2

Electrical

Specifications **2-4**
Test and Adjustment Specifications 2-4
Dielectric Sealant Locations 2-5
Commonly Used Terms 2-6
Electrical Components Symbols/How to Read Schematic **2-6**
Electrical Component Symbols 2-6
Electrical Schematic Component Identification **2-11**
Electrical Schematic Component Identification 2-11
Theory of Operation and Sub Circuit Schematics **2-44**
Machine Power Circuit—Theory of Operation 2-44
Machine Power Circuit Schematic 2-45
Start Circuit—Theory of Operation 2-74
Start Circuit Schematic 2-75
Run Circuit—Theory of Operation 2-76
Run Circuit Schematic 2-77
Charging Circuit—Theory of Operation 2-78
Charging Circuit Schematic 2-79
Drive Circuit—Forward Theory of Operation (ISO-Mode) 2-81
Drive Circuit Forward Schematic (ISO-Mode) 2-82
Drive Circuit—Forward Theory of Operation (H-Mode) 2-85
Drive Circuit Forward Schematic (H-Mode) 2-86
Drive Circuit—Reverse Theory of Operation (ISO-Mode) 2-89
Drive Circuit Reverse Schematic (ISO) 2-90
Drive Circuit—Reverse Theory of Operation (H-Mode) 2-93
Drive Circuit Reverse Schematic (H-Mode) 2-94
Drive Circuit—Right Turn Theory of Operation (ISO-Mode) 2-97
Drive Circuit Right Turn Schematic (ISO-Mode) 2-98
Drive Circuit—Right Turn Theory of Operation (H-Mode) 2-101
Drive Circuit Right Turn Schematic (H-Mode) 2-102
Drive Circuit—Left Turn Theory of Operation (ISO-Mode) 2-105
Drive Circuit Left Turn Schematic (ISO-Mode) 2-106
Drive Circuit—Left Turn Theory of Operation (H-Mode) 2-109
Drive Circuit Left Turn Schematic (H-Mode) 2-110
Drive Circuit—Two Speed Theory of Operation 2-113
Drive Circuit Two Speed Schematic 2-114
Drive Circuit—Creep Mode Theory of Operation 2-117
Drive Circuit Creep Mode Schematic 2-118
Boom Controls Circuit—Theory of Operation (ISO-Mode) 2-121
Boom Controls Circuit Schematic (ISO-Mode) 2-122
Boom Controls Circuit—Theory of Operation (H-Mode) 2-125
Boom Controls Circuit Schematic (H-Mode) 2-126

PREVIEW - YOUFIXTHIS.COM

Download full manual at youfixthis.com

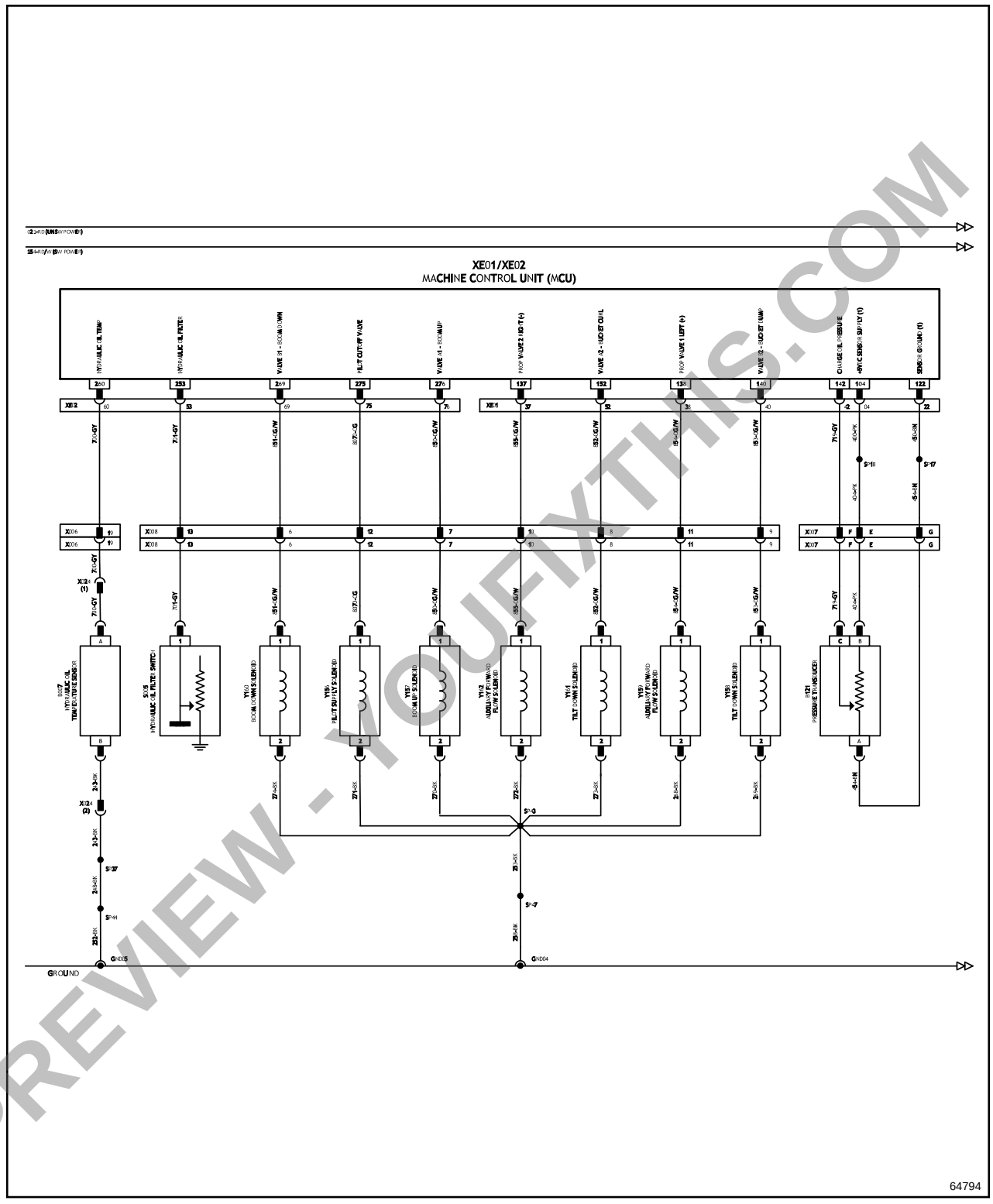

Figure 2-18: Hydraulics - Main

PREVIEW - YOUFIXTHIS.COM

Download full manual at youfixthis.com

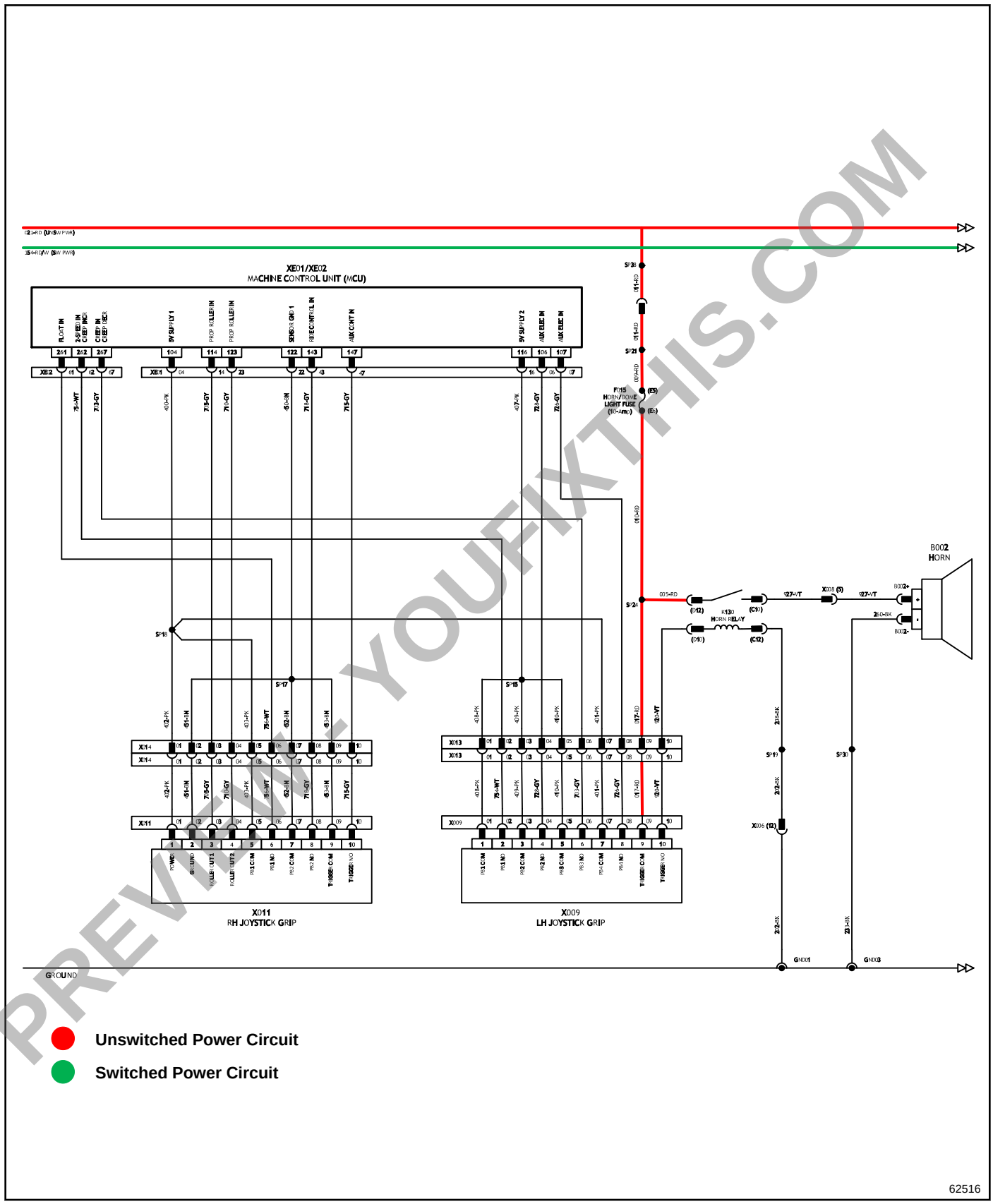

Figure 2-44: Joystick Grip Controls

PREVIEW - YOUFIXTHIS.COM

Download full manual at youfixthis.com

Page Intentionally Blank

PREVIEW - YOUFIXTHIS.COM

Download full manual at youfixthis.com

Page Intentionally Blank

PREVIEW - YOUFIXTHIS.COM

Download full manual at youfixthis.com

Page Intentionally Blank

PREVIEW - YOUFIXTHIS.COM

Download full manual at youfixthis.com

Page Intentionally Blank

PREVIEW - YOUFIXTHIS.COM

Download full manual at youfixthis.com

Probable Cause	Remedy
Faulty door switch (S087)	Test door switch. (See "**Door Switch Test**" on **page 2-215**.)
Possible hydraulic system failure	See "**Table 4-4**" on **page 4-48**.

PREVIEW - YOUFIXTHIS.COM

Download full manual at youfixthis.com

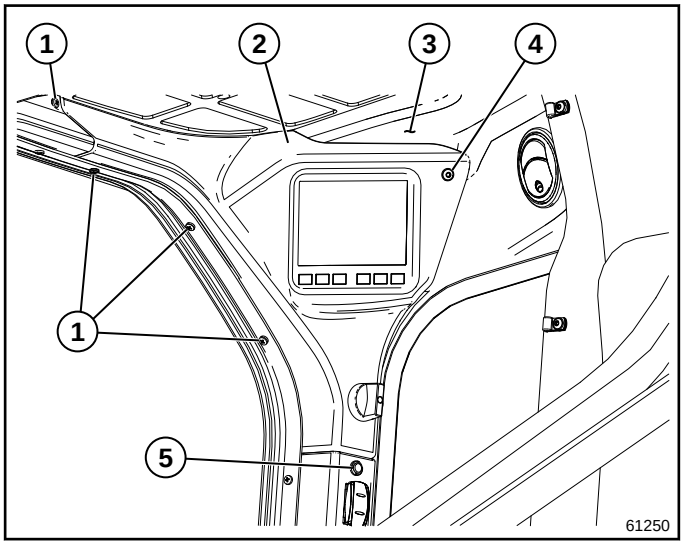

Figure 2-153: Panel Removal and Installation

4. Remove bolt (4) from panel (2).
5. Remove plastic rivet (5) from panel (2).
6. Remove four screws (1) and panel (2) from cab (3).

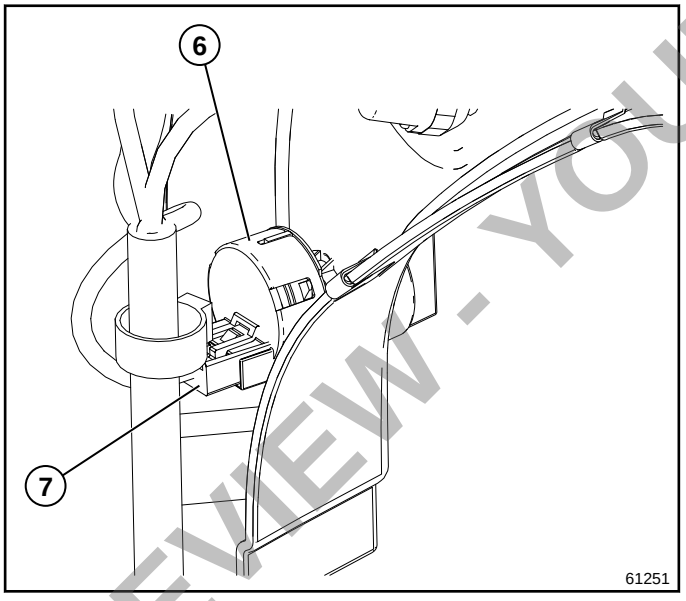

Figure 2-154: Key Switch Connector Removal and Installation

7. Disconnect connector (7) from key switch (6).

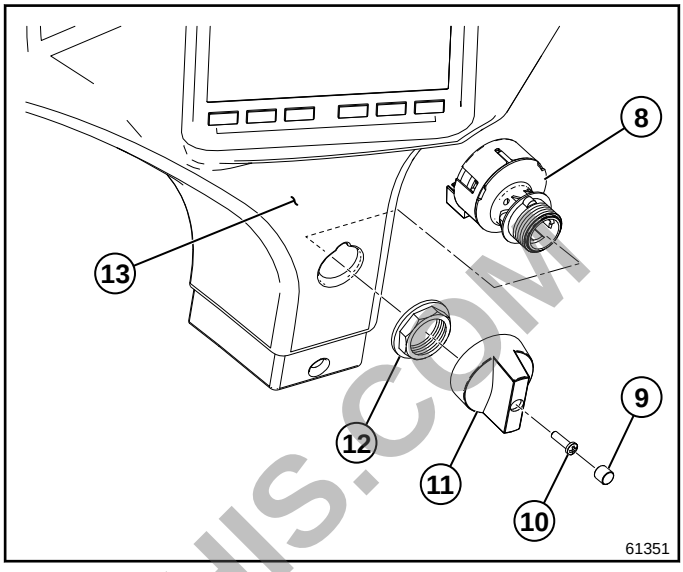

Figure 2-155: Key Switch Removal and Installation

NOTE

Perform Step 8 for keyless ignition switch.

8. Remove plug (9), screw (10), and cap (11) from keyless ignition switch (8).
9. Remove nut (12) and key switch (8) from panel (13).

Installation Note

Install the key switch by reversing the order of removal.

PREVIEW - YOUFIXTHIS.COM

Download full manual at youfixthis.com

Drive Circuit Neutral Schematic (Wheeled Machine with Manual Controls)

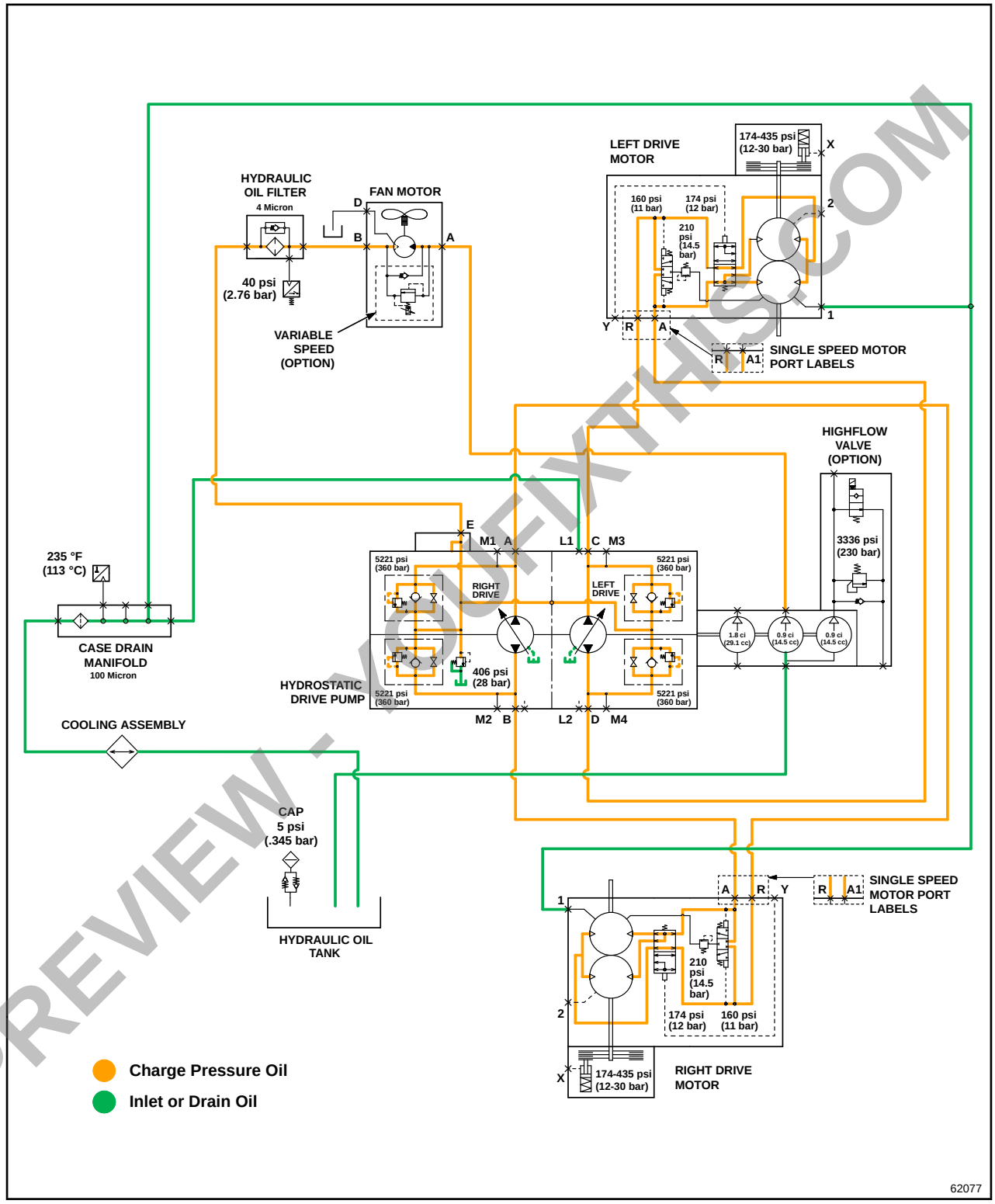

Figure 3-9

PREVIEW - YOUFIXTHIS.COM

Download full manual at youfixthis.com

Drive Circuit—Left Turn Theory of Operation (Wheeled Machine with Electronic Controls)

NOTE

Port names differ between one and two speed drive motors. The two speed motor is described in this theory of operation. If machine is equipped with the one speed drive motor option, please see corresponding schematic for appropriate port naming.

System Conditions:

- Engine running
- Park brake released

Hydrostatic Drive Pump Charge Circuit

The hydrostatic drive pump and gear pump are driven by the engine. Oil is drawn from the hydraulic oil tank into section 2 of the gear pump where it is charged. The oil is then routed through the fan motor and then through a 4 micron hydraulic oil filter. The filtered oil enters port E of the hydrostatic drive pump. The oil exits the hydrostatic drive pump through ports A, B, C, and D, and is routed to ports A and R of both drive motors. Oil is returned from port 1 of both drive motors through a 100 micron filter in the case drain manifold, then through the cooling assembly and back to the hydraulic oil tank. Oil is returned from port L3 of the hydrostatic drive pump through a 100 micron filter in the case drain manifold. The oil is routed through the cooling assembly, and back to the hydraulic oil tank.

Left Turn Circuit

With the joystick(s) in the left turn position, charge pressure oil is directed to the desired side of the control piston via solenoids Y164-C1 and Y165-C1. This causes the control pistons to increase the displacement of the drive pumps in the left turn direction. Pressurized oil is directed out from ports A and C of the hydrostatic drive pump. The oil is then routed to port R of the left drive motor and port A of the right drive motor, driving the motors in a direction to achieve left turn movement of the machine. Clockwise for the right and left motors. Return oil exits through port A of the left drive motor and port R of the right drive motor, and is returned to the hydrostatic drive pump through ports B and D to replenish the right and left sides of the hydrostatic drive pump. Drain oil is returned from port 1 of both drive motors to a 100 micron filter in the case drain manifold. The oil is routed through the cooling assembly and back to the hydraulic oil tank.

PREVIEW - YOUFIXTHIS.COM

Download full manual at youfixthis.com

Table 3-6. Two Speed Will Not Engage

Probable Cause	Remedy
Hydraulic oil not at correct level in hydraulic oil tank	Fill hydraulic oil tank to correct level. (See "**Drain/Fill**" on **page 4-64**.)
Hydraulic oil cold	Warm hydraulic oil to operating temperature.
Air in hydraulic system (air bubbles in hydraulic oil)	Check suction line for air leaks. Repair as needed. Operate various hydraulic systems until hydraulic system is free of air.
Faulty two speed valve	Replace two speed valve. (See "**Removal and Installation**" on **page 3-91**.)
Incorrect hydrostatic relief valve pressure	Test hydrostatic relief valve pressure. (See "**Charge Pressure Relief Valve Test**" on **page 3-79**.) Replace hydrostatic drive pump. (See "**Hydrostatic Drive Pump (Machines with Manual Controls)**" on **page 3-85**or "**Hydrostatic Drive Pump (Machines with Electronic Controls)**" on **page 3-87**.)

PREVIEW - YOUFIXTHIS.COM

Download full manual at youfixthis.com

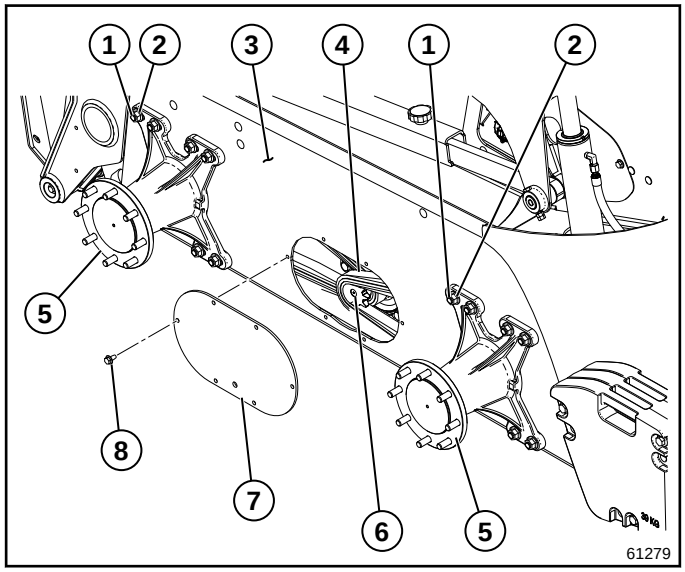

Figure 3-61: Chain Removal and Installation

7. Remove six bolts (8) and access cover (7) from machine (3).
8. Loosen 16 nuts (2) on bolts (1) and slide wheel hub (5) toward drive motor (6) to loosen chains (4).
9. Remove chains (4) from drive motor (6).

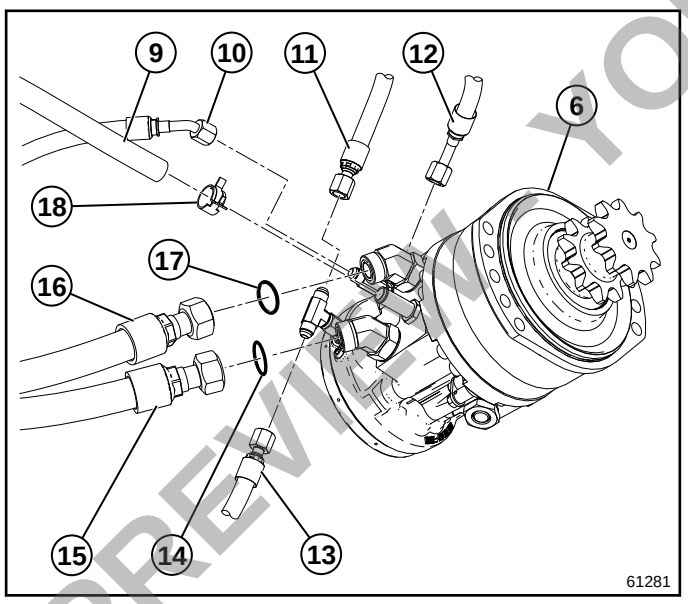

Figure 3-62: Hose Removal and Installation

10. Remove hose (11) from drive motor (6).
11. Remove hose (13) from drive motor (6).
12. Remove hose (10) from drive motor (6).
13. Remove hose (12) from drive motor (6).
14. Remove hose (16) and O-ring (17) from drive motor (6).
15. Remove hose (15) and O-ring (14) from drive motor (6).
16. Remove clamp (18) and hose (9) from drive motor (6).

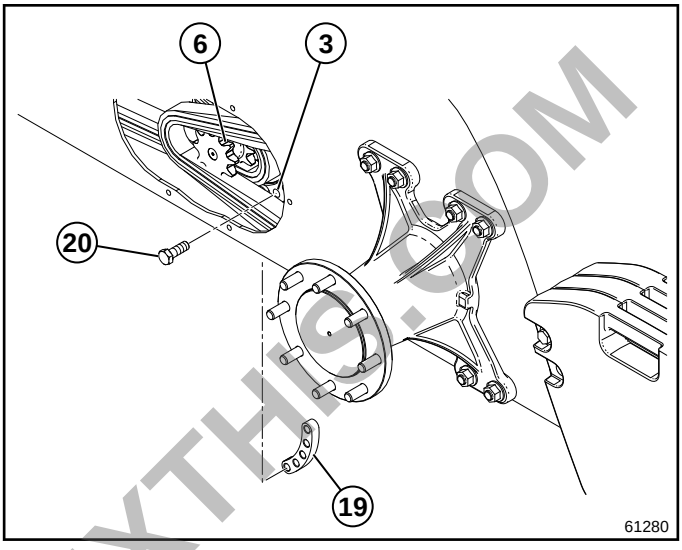

Figure 3-63: Drive Motor Removal and Installation

17. Remove 10 bolts (20) from machine (3), drive motor (6), and two brackets (19).
18. Remove drive motor (6) from machine (3).

Installation Notes

- *Install the drive motor by reversing the order of removal.*
- *Lightly lubricate O-rings with clean hydraulic oil prior to installation.*
- *Remove caps and plugs as hoses and fittings are installed.*
- *Install hoses and fittings as noted prior to removal.*

PREVIEW YOUFIXTHIS.COM

Download full manual at youfixthis.com

Bucket Dump Circuit—Theory of Operation

System Conditions

- Engine running
- Park brake released

Oil Supply to Main Control Valve

The hydrostatic drive pump and gear pump are driven by the engine. Oil is drawn from the hydraulic oil tank into sections 1 and 2 of the gear pump where it is charged. The operating pressure oil is routed from section 2 of the gear pump through the fan motor and then through a 4 micron hydraulic oil filter. The filtered oil enters port E of the hydrostatic drive pump. The hydrostatic drive pump port M3 supplies charge pressure oil to port X1 on the main control valve. When the park brake is released, a solenoid is energized and the interlock spool in the main control valve shifts. This supplies charge pressure oil to the lift, tilt, and auxiliary spools. Section 1 of the gear pump supplies operating pressure oil to port P1 of the main control valve.

Bucket Curl Circuit

When the bucket control is in the dump position, the tilt spool solenoid is energized, shifting the tilt spool. Operating pressure oil is routed through the main control valve from port P1 through the tilt spool to the main control valve port B2. Operating pressure oil is then routed from main control valve port B2 to the piston side of the bucket cylinder, causing the bucket to dump.

Return oil is forced from the piston side of the bucket cyliders and is routed to the main control valve port A2. Return oil is routed from the main control valve port A2 through the tilt spool, out of the main control valve port T2, and then returned to the hydraulic oil tank.

Circuit Relief

The bucket dump circuit is protected by the 3481 psi (240 bar) main system relief valve. If the pressure on the operating pressure oil circuit of the relief valve reaches 3481 psi (240 bar), the valve will open. Operating pressure oil exits the main control valve at port T2 and returns to the hydraulic oil tank.

The bucket dump circuit is protected by a secondary 3916 psi (270 bar) pressure relief. If the pressure on the operating pressure oil circuit of the relief valve reaches 3916 psi (270 bar), the valve will open. Operating pressure oil exits the main control valve at port T2 and returns to the hydraulic oil tank.

PREVIEW - YOUFIXTHIS.COM

Download full manual at youfixthis.com

Table 4-4. Self Leveling Does Not Function (Continued)

Incorrect boom cylinder operating pressure	Pressure test boom cylinders. (See "**Hydraulic Cylinder Pressure Test**" on **page 4-58**.)
Faulty boom cylinder(s)	Test boom cylinder(s). (See "**Boom Cylinder Leakage Test**" on **page 4-51**.) Replace boom cylinder(s). (See "**Boom Cylinders**" on **page 4-88**.)
Faulty bucket cylinder(s)	Test bucket cylinder(s). (See"**Bucket Cylinder Leakage Test**" on **page 4-52**.)
Faulty self leveling valve	Replace self leveling valve. (See"**Self Leveling Valve**" on **page 4-84**.)

Table 4-5. Fan Motor Does Not Operate

Probable Cause	Remedy
Hydraulic oil not at correct level in hydraulic oil tank	Fill hydraulic oil tank to correct level. (See "**Hydraulic Oil Tank Drain/Fill Procedure**" on **page 4-64**.)
Hydraulic oil cold	Warm hydraulic oil to operating temperature.
Faulty fan motor	Replace fan motor. (See "**Fan Motor (One Speed)**" on **page 4-70** or "**Fan Motor (Variable Speed)**" on **page 4-72**.)

Table 4-6. Boom Does Not Raise or Lower

Probable Cause	Remedy
Hydraulic oil not at correct level in hydraulic oil tank	Fill hydraulic oil tank to correct level. (See "**Hydraulic Oil Tank Drain/Fill Procedure**" on **page 4-64**.)
Hydraulic oil cold	Warm hydraulic oil to operating temperature.
Possible electrical system failure	See **Boom/Bucket Circuit**.
Incorrect boom cylinder operating pressure	Pressure test boom cylinders. (See "**Hydraulic Cylinder Pressure Test**" on **page 4-58**.)
Faulty boom cylinder(s)	Test boom cylinder(s). (See "**Boom Cylinder Leakage Test**" on **page 4-51**.) Replace boom cylinder(s). (See "**Boom Cylinders**" on **page 4-88**.)

Table 4-7. Bucket Does Not Curl or Dump

Probable Cause	Remedy
Hydraulic oil not at correct level in hydraulic oil tank	Fill hydraulic oil tank to correct level. (See "**Hydraulic Oil Tank Drain/Fill Procedure**" on **page 4-64**.)
Hydraulic oil cold	Warm hydraulic oil to operating temperature.
Possible electrical system failure	See **Boom/Bucket Circuit**.
Incorrect bucket cylinder operating pressure	Pressure test bucket cylinders. (See "**Hydraulic Cylinder Pressure Test**" on **page 4-58**.)

PREVIEW - YOUFIXTHIS.COM

Download full manual at youfixthis.com

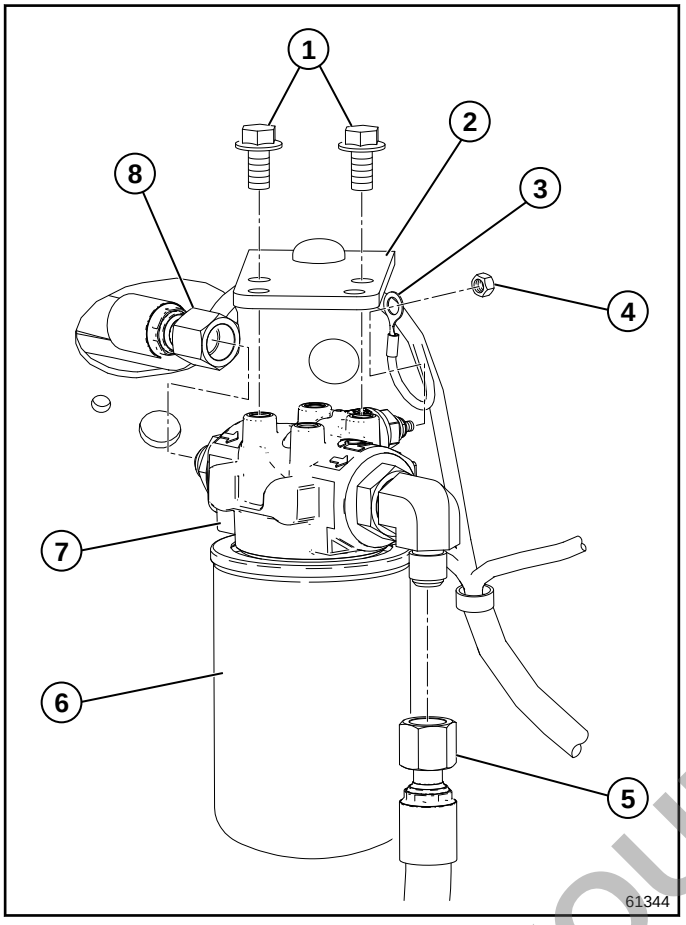

Figure 4-54: Hydraulic Oil Filter Housing Removal and Installation

5. Remove hydraulic oil filter (6) from hydraulic oil filter housing assembly (7).
6. Remove hose (8) from hydraulic oil filter housing assembly (7).
7. Remove hose (5) from hydraulic oil filter housing assembly (7).
8. Remove nut (4) and wire (3) from hydraulic oil filter housing assembly (7).
9. Remove two bolts (1) and hydraulic oil filter housing assembly (7) from bracket (2).

Installation Notes

- *Install the hydraulic oil filter housing by reversing the order of removal.*
- *Lightly lubricate O-rings with clean hydraulic oil prior to installation.*
- *Remove caps and plugs as hoses and fittings are installed.*
- *Install hoses and fittings as noted prior to removal.*

PREVIEW - YOUFIXTHIS.COM

Download full manual at youfixthis.com



Figure 5-11: Machine Identification Screen

5

6. Ensure machine identification parameters are correct and click the Next button (1) on the Machine Identification screen.
7. Sit in seat.
8. Fasten seat belt.
9. Start machine.
10. Raise engine idle above 2,000 RPM.
11. Allow hydraulic oil to reach operating temperature.

PREVIEW - YOUFIXTHIS.COM

Download full manual at youfixthis.com

PREVIEW ONLY

You're viewing 25 of 506 pages

The full manual includes:

- All 506 pages, complete
- Searchable PDF (find any keyword)
- No watermarks
- Instant download
- Print-ready quality

GET FULL MANUAL NOW

Wacker Neuson SW16, SW17, SW20, SW21, ST28, ST31 Service Manual

Scan or click anywhere
youfixthis.com

Click anywhere on this page to get the full manual