1.2 Maintenance overview

Daily/weekly maintenance

Work to be performed by the operator	Daily	Every week
Clean the machine	•	
Clean the air filter	•	
Check the machine for general damage	•	
Check the coolant level	•	
Checking the engine-oil level	•	
Check the engine for leaks		•
Check the hydraulic oil level	•	
Check the tire condition and pressure		•
Check all bolts for tightness		•
Check the wheel bolts		•
Check the braking system for correct function	•	
Check the brake fluid		•
Check the washer system and wiper water level	•	
Check the seat belt	•	
Check the instruments and indicator lights, and the acoustic warning devices for correct function	•	
Check the electrical system and lights for correct function	•	
Check the brake/inching pedal for correct function	•	
Check the steering system	•	
Check control levers and switches for correct function	•	
Check the attachments	•	
Check the exhaust for malfunctions and excessive smoke		•
Perform grease lubrication according to the lubrication plan, including of the attachments		•
Check the protective ROPS/FOPS structure		•
Clean the preliminary separator of the fuel filter		•
Check the machine axles for leaks		•
Check the hydraulic oil and water radiator for leaks and dirt, clean it if necessary		•
Check the attachments for safety and correct function		•
Check the routing of the hoses, pipe lines and electric lines		•
Check the air filter and intake hose		•
Check the engine mounting and axle mounting		•
Perform a general safety check, *General safety check on page 1-20*		•

PREVIEW - YOUFIXTHIS.COM

Download full manual at youfixthis.com

Removing/installing the engine

Preparing work

Tools:

- Suitable lifting tackle with a carrying capacity of at least 250 kg
- Suitable slings (cables and shackles) with corresponding load-bearing capacity
- Container for collecting oil
- Receptacle for collecting the coolant
- Plugs (different sizes) for closing the oil lines

Technical data

BMK	Designation	Weight
	Engine	196 kg

Environment

Use a suitable container to collect the fuel and coolant as they drain and dispose of them in an environmentally friendly manner!

Disassemble

WARNING

Contact with hot liquids and machine components

Death or serious injury due to skin burns.

► Wear suitable protective clothing.

► Let liquids and the diesel engine cool down.

► Observe instructions.

1. Release the pressure in the hydraulic system – *see "Releasing residual pressure in the hydraulic system" on page E-31*.
2. Remove the engine cover – *see "Removing/installing the engine cover" on page 10-1*.
3. Tilt the control stand sideways – *see "Raising the control stand sideways" on page 1-16*.
4. Dismantle cooler – *see "Removing/installing the radiator" on page 3-1*.
5. Loosen clamp **1**.
6. Pull off the hose.
7. Close opening so that no dirt can get inside.

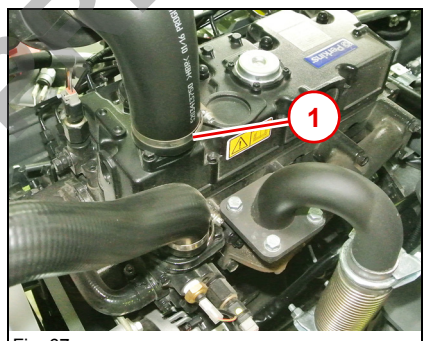

Fig. 67

PREVIEW - YOUFIXTHIS.COM
Download full manual at youfixthis.com

E.3 Tightening torques

General tightening torques

Screw dimensions	Tightening torques in Nm (ft.lbs.)

Blurred on purpose. The manual you buy has this page in full quality.

PREVIEW - YOUFIXTHIS.COM

Download full manual at youfixthis.com

8.14 Hydraulic diagram – HDM19/4

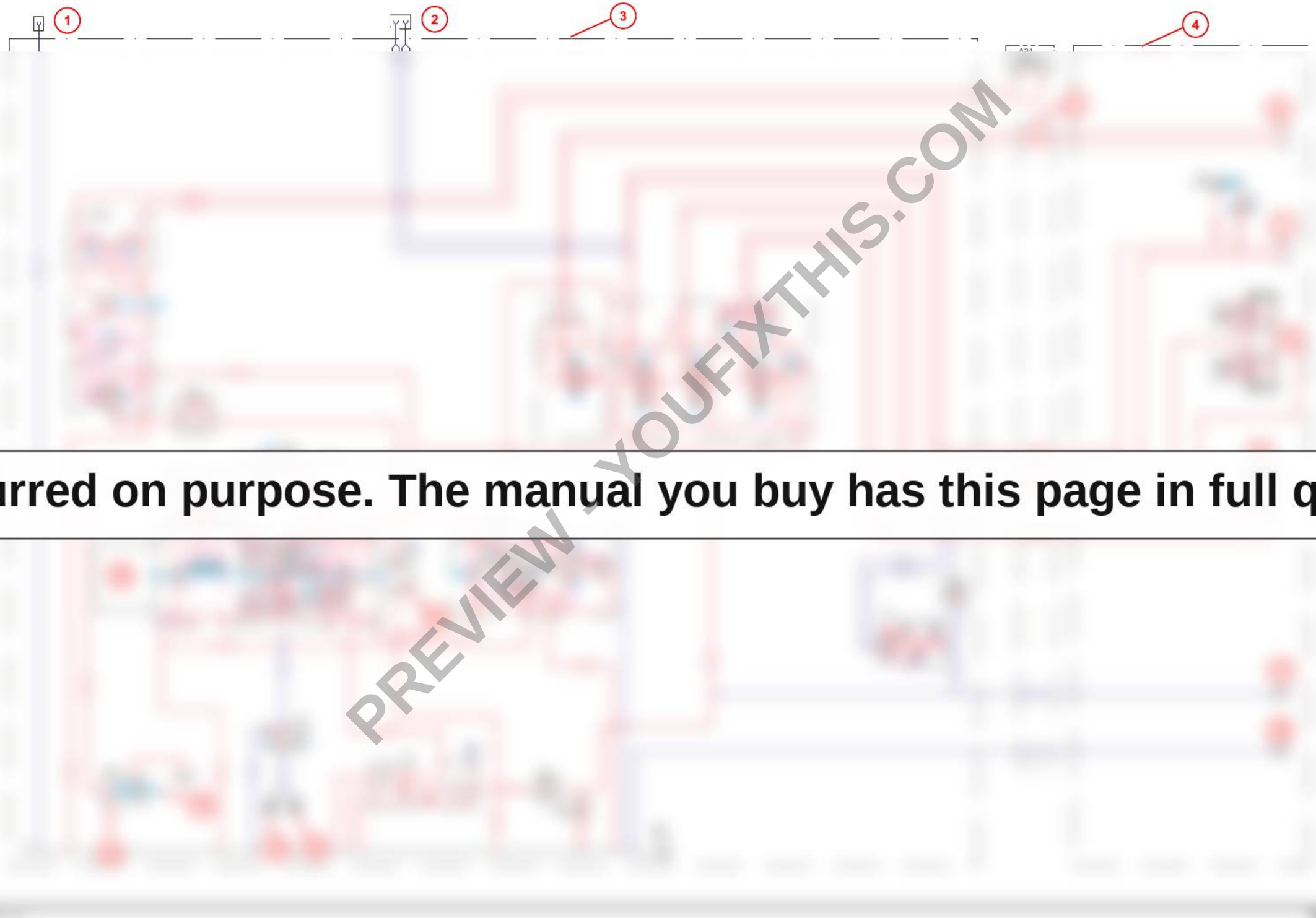

PREVIEW - YOUFIXTHIS.COM
Blurred on purpose. The manual you buy has this page in full quality.
Download full manual at youfixthis.com

9.5 Electrical diagram – power supply engine (FG01-01)

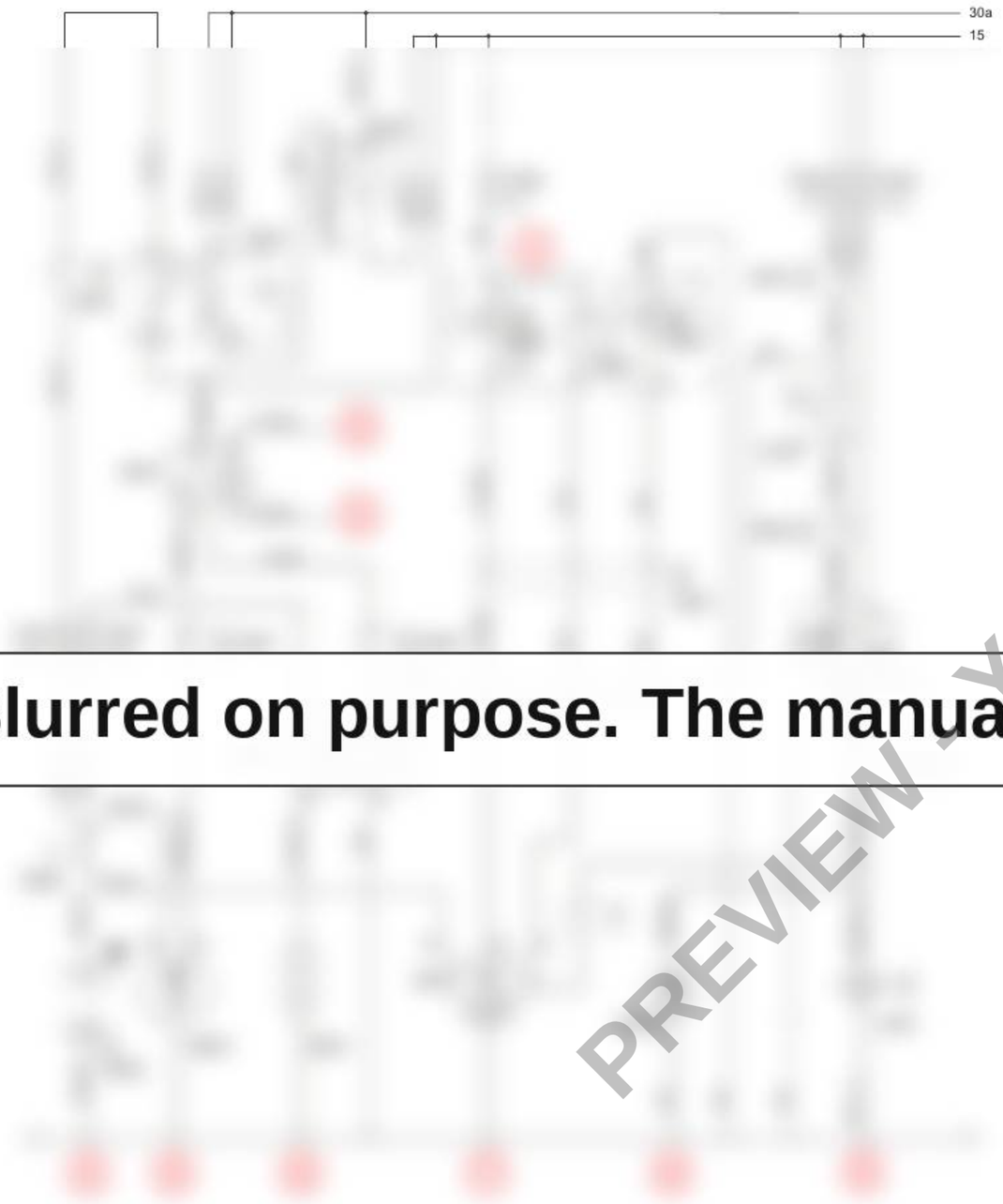

Assignment	Designation
F003	Travel direction, options

PREVIEW - YOUFIXTHIS.COM
Blurred on purpose. The manual you buy has this page in full quality.

Download full manual at youfixthis.com

Contents

E Introduction

E.1 Notice on this service manual E-1
Use of the service manual E-2
Explanation of symbols and abbreviations E-3
Repair instructions E-4
E.2 Technical data E-5
Engine E-5
Permissible inclination E-5
Electrical system E-5
Axles E-5
Machine-travel hydraulics E-6
Operating hydraulics E-6
Brakes E-6
Tires E-7
Steering system E-7
Noise emissions E-7
Vibration E-8
Weights E-8
Payload/load-carrying capacity/axle load E-9
Dimensions E-10
E.3 Tightening torques E-12
General tightening torques E-12
Specific tightening torques E-12
Torque values for metric coarse-pitch thread E-13
Torque values for metric fine-pitch thread E-14
Tightening torques for hydraulic screw connections and climate screw fixtures with taper connections and O-rings DIN 3865 ..... E-15
Tightening torques for hydraulic screw connections with cutting ring DIN 3861 ..... E-16
Tightening torques for hydraulic screw struts SDS E-17
Tightening torques for hydraulics rotating threaded fittings E-20
Tightening torques for hollow screws DIN 7643 ..... E-20
Tightening torques for adjustable hydraulic screw struts SDE E-21
Tightening torques for brake line threaded fittings E-23
Tightening torques for worm drive hose clamps E-23
Tightening torques for spring-loaded worm drive hose clamps E-23
E.4 Safety instructions E-24
Pay particular attention to the following E-24
Safety symbols and signal words E-24
Safety and Accident Prevention Regulations E-25
Safety instructions for repair work E-26
Safety instructions for work on the engine E-29
Safety instructions for work on the hydraulic system E-30
Safety instructions for work on the air conditioning system E-32
Safety instructions for work on traveling drive and axles E-32
Safety instructions for work on the braking system E-32
Safety instructions for work on the frame E-32
Safety instructions for work on the electrical system E-34
Safety instructions for work on the wheels E-34
E.5 Special tools E-35
Claws and extractors E-35
Clamp E-35

PREVIEW - YOUFIXTHIS.COM

Download full manual at youfixthis.com

E.4 Safety instructions

Pay particular attention to the following

To eliminate risks, the instructions in this service manual must be read and observed by every person using, servicing, repairing, maintaining or inspecting this machine.

In particular, read this section on safety.

Safety symbols and signal words

Explanation

The following symbol identifies safety instructions. It is used for warning against potential personal risk or danger.

DANGER

DANGER identifies a situation causing death or serious injury if it is not avoided.

Consequences in case of non-observance.

► Avoidance of injury or death.

WARNING

WARNING identifies a situation that can cause death or serious injury if it is not avoided.

Consequences in case of non-observance.

► Avoidance of injury or death.

CAUTION

CAUTION identifies a situation that can cause injury if it is not avoided.

Consequences in case of non-observance.

► Avoidance of injury.

NOTICE

NOTICE identifies a situation that causes damage to the machine if it is not observed.

► Avoidance of damage to property.

The warning and safety signs attached to the machine provide important information for safe operation. Compliance is for your safety.

PREVIEW - YOUFIXTHIS.COM

Download full manual at youfixthis.com

B Operation
B.1 Overview of control elements ... B-1
Control and display elements ... B-2
Indicating instruments ... B-3
Loader unit control lever ... B-4
Overview of switch panels ... B-5
B.2 Indicator lights and warning lights (overview) ... B-6

1 Maintenance
1.1 Information on maintenance ... 1-1
Responsibilities and prerequisites ... 1-1
Safety instructions ... 1-1
Battery master switch ... 1-5
1.2 Maintenance overview ... 1-6
Daily/weekly maintenance ... 1-6
Inspection schedules ... 1-7
Inspection intervals ... 1-10
1.3 Lubrication plan ... 1-13
1.4 Fluids and lubricants ... 1-15
Fluids and lubricants (overview) ... 1-15
1.5 Maintenance accesses ... 1-16
Opening the engine cover ... 1-16
Raising the control stand sideways ... 1-16
1.6 Cleaning and maintenance ... 1-19
Information on cleaning and maintenance ... 1-19
Information on cleaning ... 1-20
General safety check ... 1-20
1.7 Lubrication work ... 1-21
Lubrication ... 1-21
Lubricating with the central lubrication system (option) ... 1-21
Central lubrication system diagram ... 1-24
Installing the high-pressure hoses on the central lubrication system ... 1-25
Instructions for troubleshooting in case of central lubrication system blocking ... 1-26
Repairing a blocking distributor of the central lubrication system ... 1-27
Troubleshooting table for central lubrication system ... 1-28
1.8 Fuel system ... 1-29
Information on the fuel system ... 1-29
Fuel system ... 1-30
Refueling with diesel fuel ... 1-30
Maintenance fuel filter ... 1-32
Replacing the fuel filter element ... 1-33
Replacing the fuel filter ... 1-35
Bleeding the fuel system ... 1-35
1.9 Engine lubrication system ... 1-36
Replace the engine oil and engine oil filter ... 1-36
1.10 Cooling system ... 1-37
Information on the cooling system ... 1-37
Information on the coolant ... 1-37
Checking/adding coolant ... 1-38
Checking the antifreeze mixture ... 1-38
Cleaning the cooling system ... 1-39
1.11 Air filter ... 1-40
Information on the engine air filter system ... 1-40
Engine air filter dust valve ... 1-40
Engine air filter ... 1-41

PREVIEW - YOUFIXTHIS.COM

Download full manual at youfixthis.com

Work to be performed (please mark with a cross) at 500 operating hours
Set the valve clearance
Replace the hydraulic oil
Replace the hydraulic oil return filter
Replace the hydraulic oil pressure filter
Replace the oil in the transfer gearbox
Replace the oil in the axles
Perform grease lubrication according to the lubrication plan
Lubricate the cardan shaft
Lubricate with oil: all levers, Bowden cables and hinges
Check all oil/fluid levels

The following inspection intervals apply after this inspection:

Inspection intervals

NOTICE

The maintenance and inspection personnel must have specialized knowledge about the maintenance and inspection work on the machine.

► Observe the Operator's Manual of the engine.

Information

The maintenance specified in the inspection schedule must be performed according to whichever interval is reached first, in other words, depending on whether the operating hours are reached or the time interval specified in the schedule is reached.

PREVIEW - YOUFIXTHIS.COM

Download full manual at youfixthis.com

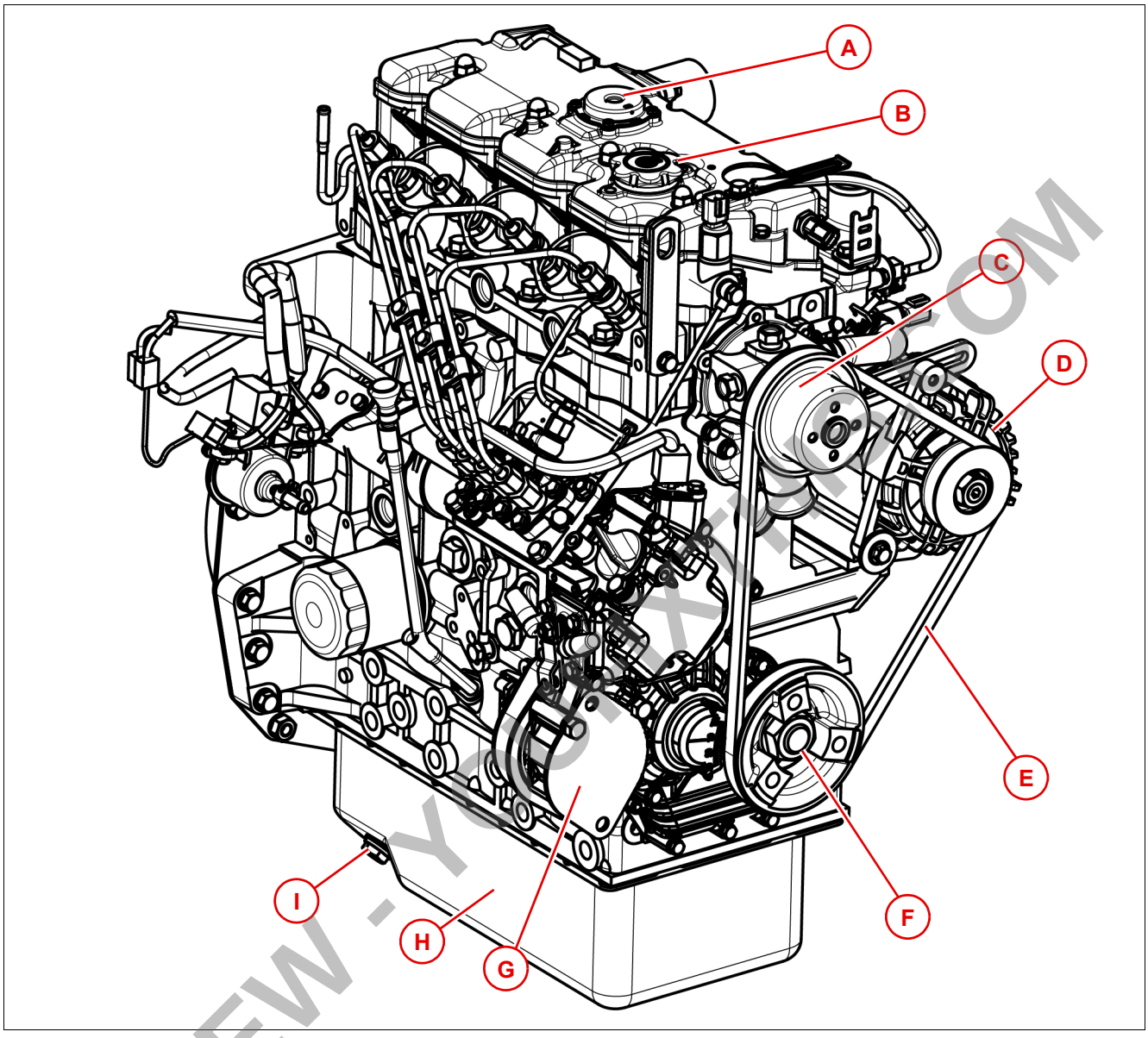

Pos.	Designation
A	Crankcase breather
B	Upper oil-filling cap
C	Water pump
D	Alternator
E	fan belt
F	Crankshaft pulley
G	Cover plate for auxiliary drive
H	Engine oil sump
I	Engine oil drain plug

PREVIEW - YOUFIXTHIS.COM

Download full manual at youfixthis.com

7 Steering system

7.1 Steering orbitrol S4

Overview

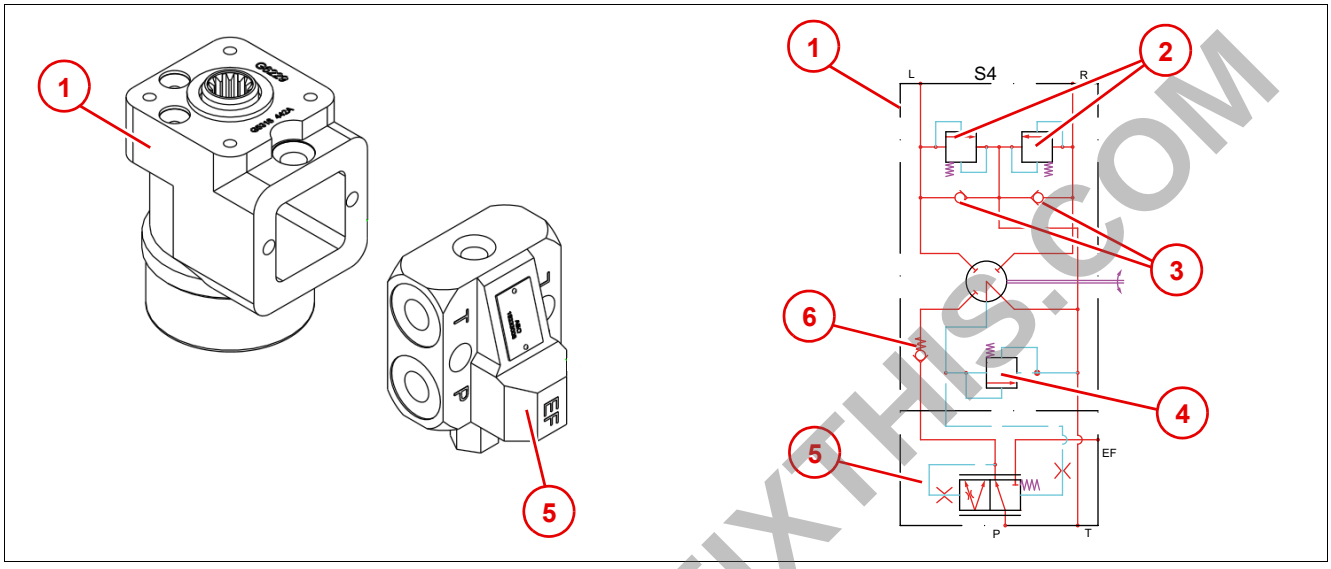

Connection	Power supply
EF	Output to control valve.
L	To steering cylinder **A21**
P	Input to high pressure filter **Z3**
R	To steering cylinder **A21**
T	Output to reservoir **Z15**

Component	Function
1	Steering orbitrol **S4**
2	Shock valve
3	Anticavitation valve
4	Pressure relief valve
5	Priority valve
6	Non-return valve

Function description

The steering orbitrol **S4** transmits the steering motion performed with the steering wheel to the steering cylinder **A21**. When the steering wheel is operated, the steering orbitrol **S4** measures an oil quantity which is proportional to the steering wheel rotation. This oil quantity flows to the desired side of the steering cylinder **A21** while the displaced oil is directed to the reservoir.

The shock valves **2** protect the steering orbitrol and reduce the external forces acting on the steering cylinder **A21** by limiting the pressure difference from **L** to **T** and from **R** to **T**. The shock valves **2** are directly actuated and therefore react very quickly.

PREVIEW - YOUFIXTHIS.COM

Download full manual at youfixthis.com

9.8 Electrical diagram – Tool locking, horn (FG04-01)

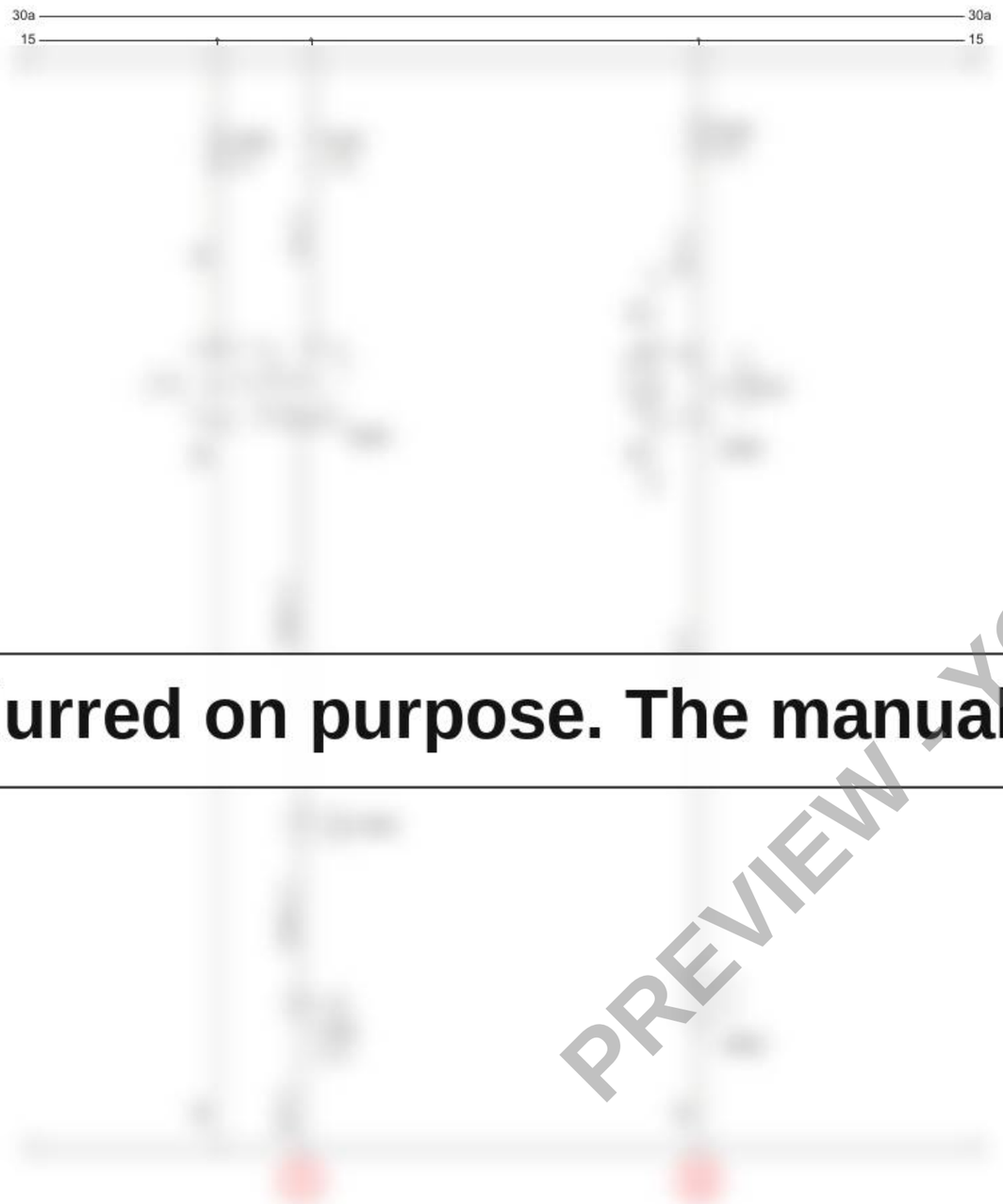

Assignment	Designation
B002	Horn

PREVIEW - YOUFIXTHIS.COM
Blurred on purpose. The manual you buy has this page in full quality.
Download full manual at youfixthis.com

PREVIEW ONLY

You're viewing 12 of 300 pages

The full manual includes:

- All 300 pages, complete
- Searchable PDF (find any keyword)
- No watermarks
- Instant download
- Print-ready quality

GET FULL MANUAL NOW

Wacker Neuson WL28 Service Manual

Scan or click anywhere
youfixthis.com

Click anywhere on this page to get the full manual