0114918	004
0700	

Roller

RD11

REPAIR MANUAL



PREVIEW - YOUFIXTHIS.COM

Download full manual at youfixthis.com

RD11
General

1A

Table of Contents

1.1 Safety Information 1A-2
1.2 Application 1A-3
1.3 Laws Pertaining to Spark Arresters 1A-3
1.4 Tools 1A-3
1.5 Reference Numbers ( ) 1A-3
1.6 Ordering Parts 1A-3
1.7 Service Safety 1A-4
1.8 Operating Safety 1A-5
1.9 Operator Safety while using Internal Combustion Engines 1A-6
1.10 Dimensions 1A-6
1.11 Sound and Vibration Measurements 1A-7
1.12 Technical Data 1A-7
1.13 Hydraulic Pressures 1A-8
1.14 Lubrication Requirements 1A-8

PREVIEW - YOUFIXTHIS.COM

Download full manual at youfixthis.com

1.11 Sound and Vibration Measurements

The required sound specification, per Appendix 1, Paragraph 1.7.4.f of the EC-Machine Regulations, is:

- the sound pressure level at operator's location (L_{pA}) = 89.1 dB(A).
- the sound power level (L_{WA}) = 106.7 dB(A).

These noise values were obtained at the operator's location according to ISO 3744 for the sound power level (L_{WA}) and ISO 6081 for the sound pressure level (L_{pA}).

The weighted effective acceleration value, determined according to ISO 8662 Part 1, is approximately:
Hands = 5.65 m/s^2, Feet = 0.64 m/s^2, Seat = 1.05 m/s^2

The sound and vibration measurements were obtained with the machine operating on hard asphalt at maximum RPM and top speed.

1.12 Technical Data

Engine

		7694	7693 / 7695
Engine Make		Briggs & Stratton	Honda
Engine Model		Vanguard 303447 / **350447***	GX610-QDF
Power	Hp (kW)	16 (11.9) / **18 (13.4)***	18 (13.4)
Displacement	in^3 (cm^3)	29.3 (480)	37.5 (614)
Spark Plug		Champion RC12YC	NKG BPR6ES or NGK BPR2ES (higher heat)
Electrode Gap	in. (mm)	0.030 (0.76)	0.025–0.028 (0.6–0.7)
Starter	type / V	Electric / 12	Electric / 12
Alternator	Amp	16	20
Air Cleaner	type	Dual Element	Dual Element
Operating Speed	rpm	3200	3200
Valve Clearance (cold)	intake in. (mm) exhaust in. (mm)	0.004–0.006 (0.10–0.16) 0.004–0.006 (0.10–0.16)	0.004–0.006 (0.10–0.16) 0.004–0.006 (0.10–0.16)
Battery	V / Size	12 / 22NF	12 / 22NF
Fuel	type	Lead-free Regular	Lead-free Regular
Fuel Capacity	gal. (l)	6.3 (24)	6.3 (24)
Fuel Consumption	gal. (l)/hr.	1.2 (4.6)	1.2 (4.6)

* Indicates Vanguard changed from 16 Hp to 18 Hp as of 1/18/99.

Roller

		7694	7693 / 7695
Dry Weight	lb.(kg)	2040 (925)	2246 (1019)
Overall Size l x w x h	in. (mm)	83x41x87 (2080x1040x1530)	83x41x87 (2080x1040x1530)
Drum Width	in. (mm)	35.4 (900)	35.4 (900)
Curb Clearance right/left	in. (mm)	15.7 / 8.2 (399 / 208)	15.7 / 8.2 (399 / 208)
Water Tank Capacity	gal. (l)	40 (151)	40 (151)
Outside Turning Radius	ft. (m)	9.2 (2.8)	9.2 (2.8)
Forward / Reverse Speed[1]	ft. (m) / min.	0–414 (0–126) [1]	0–414 (0–126) [1] / 0–328 (0–100) [1]
Gradeability		27% (12°)	27% (12°)
Vibration Frequency	vpm (Hz)	3900 (65)	3900 (65)

[1] Maximum values for forward and reverse speeds are based on the machine traveling on a firm, level surface and engine at full throttle.

PREVIEW - YOUFIXTHIS.COM
Download full manual at youfixthis.com

3.1 Engine Maintenance

An engine Operator's Manual was supplied with the machine at the time of its shipment from the factory. The manual provides detailed operation and maintenance procedures for the engine. Additional copies of this manual are available from the engine manufacturer.

Engine Performance:

The engine must be operated at full rpm to ensure optimal oil flow. This will ensure utilization of engine Hp and maximize machine performance and ensure long component life. Operating the machine at less than full rpm will cause shortened hydraulic component life and possible pump or motor failure.

3.2 Maintenance Schedules

Maintenance Schedule - Roller components	Daily before use	Every month or 100 hours	Every 6 months or 600 hours	Every year or 1200 hours
Check level of hydraulic fluid	•			
Grease articulated joint		•		
Grease rear drum drive bearing		•		
Grease exciter bearing		•		
Change hydraulic system return line filter			•	
Check and adjust scraper bars			•	
Clean battery terminals			•	
Check engine valve clearances				•
Change hydraulic oil				•

Maintenance Schedule - Vanguard Engines	Every 8 hours or daily	After first 8 hours	Every 25 hours or season	Every 50 hours or season	Every 100 hours or season	Yearly
Check level of engine oil	•					
Change engine oil		•		•		
Replace engine oil filter		•			•	
Service air cleaner pre-cleaner			•			
Service air cleaner cartridge					•	
Clean cooling system					•	
Replace spark plug						•
Check valve clearances						•
Replace in-line fuel filter						•

PREVIEW - YOUFIXTHIS.COM

Download full manual at youfixthis.com

4.1 Hydraulic Schematic Series Drive (RD11A & RD11V)

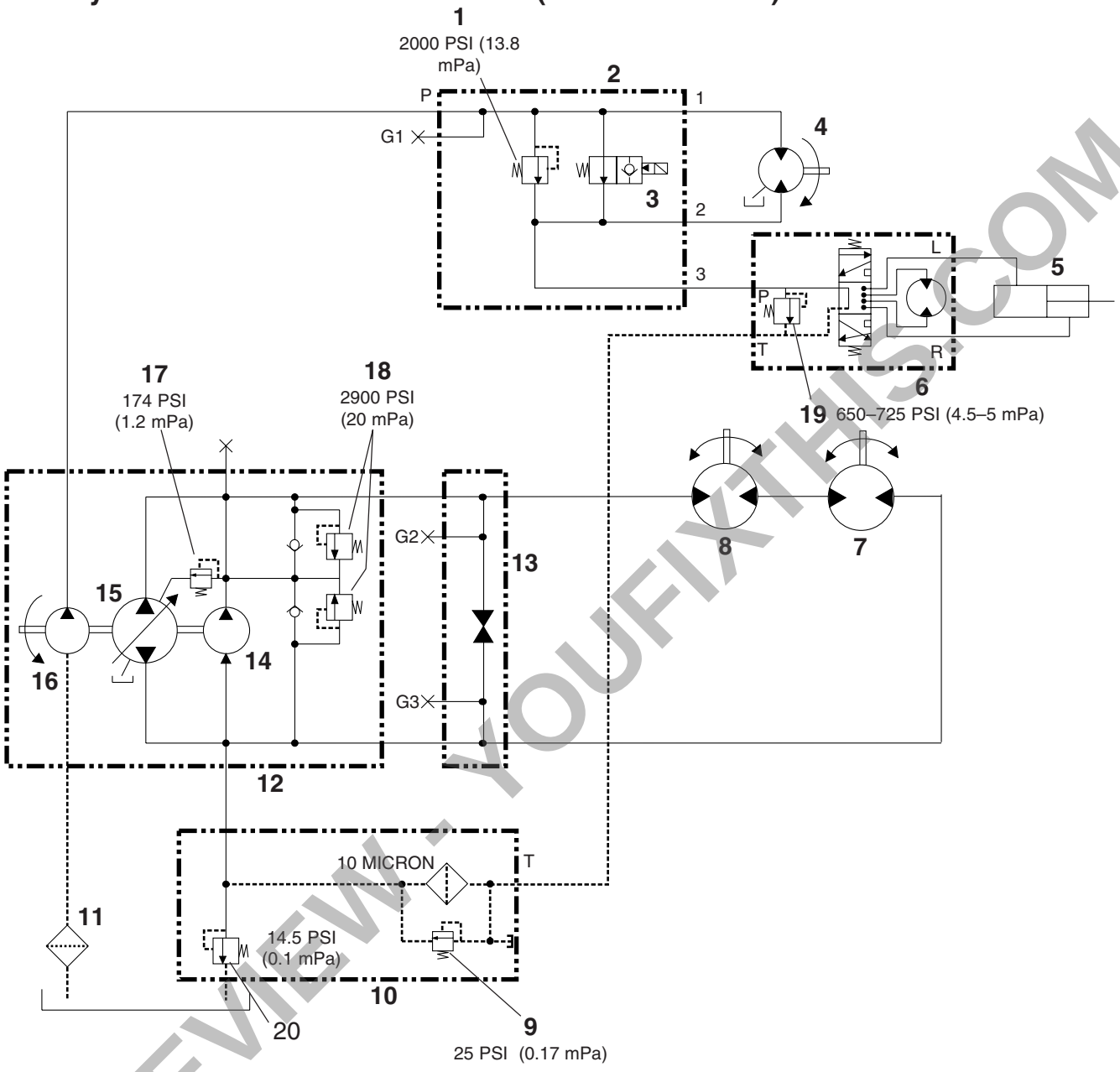

PREVIEW - YOUFIXTHIS.COM

Ref	Description
1	Exciter Relief Valve
2	Manifold
3	Exciter Control Relief Valve
4	Exciter Motor
5	Steering Cylinder
6	Steering Valve
7	Rear Drive Motor
8	Front Drive Motor
9	Filter Bypass
10	Return Line Filter Assembly
11	Suction Filter
12	Pump Assembly
13	Towing Valve
14	Drive Pump
15	Charge Pump
16	Exciter Pump
17	Charge Pressure Relief Valve
18	Internal Drive Pump Relief Valves
19	Steering Relief Valve
20	Backpressure Valve

Download full manual at youfixthis.com

6.1 Front Drum Assembly

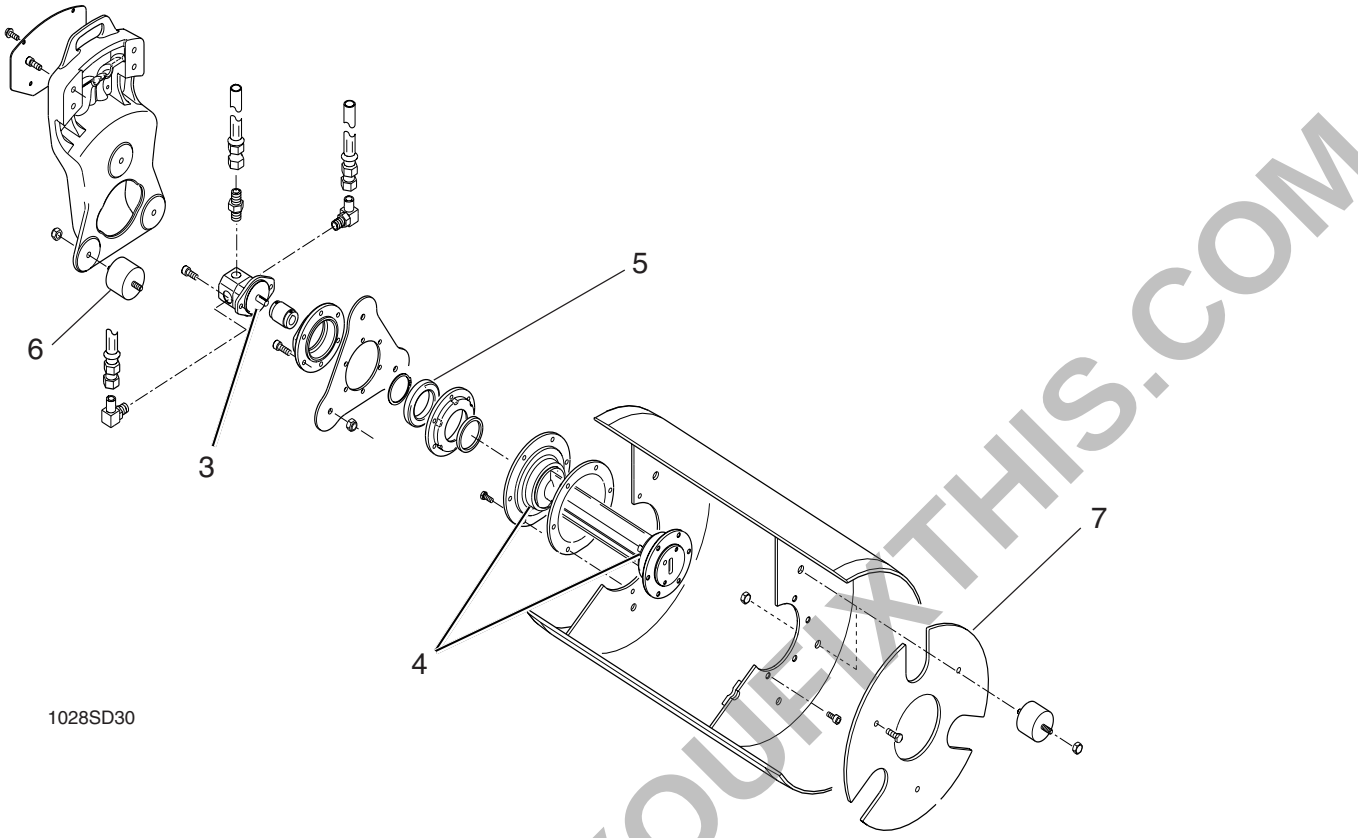

1028SD30

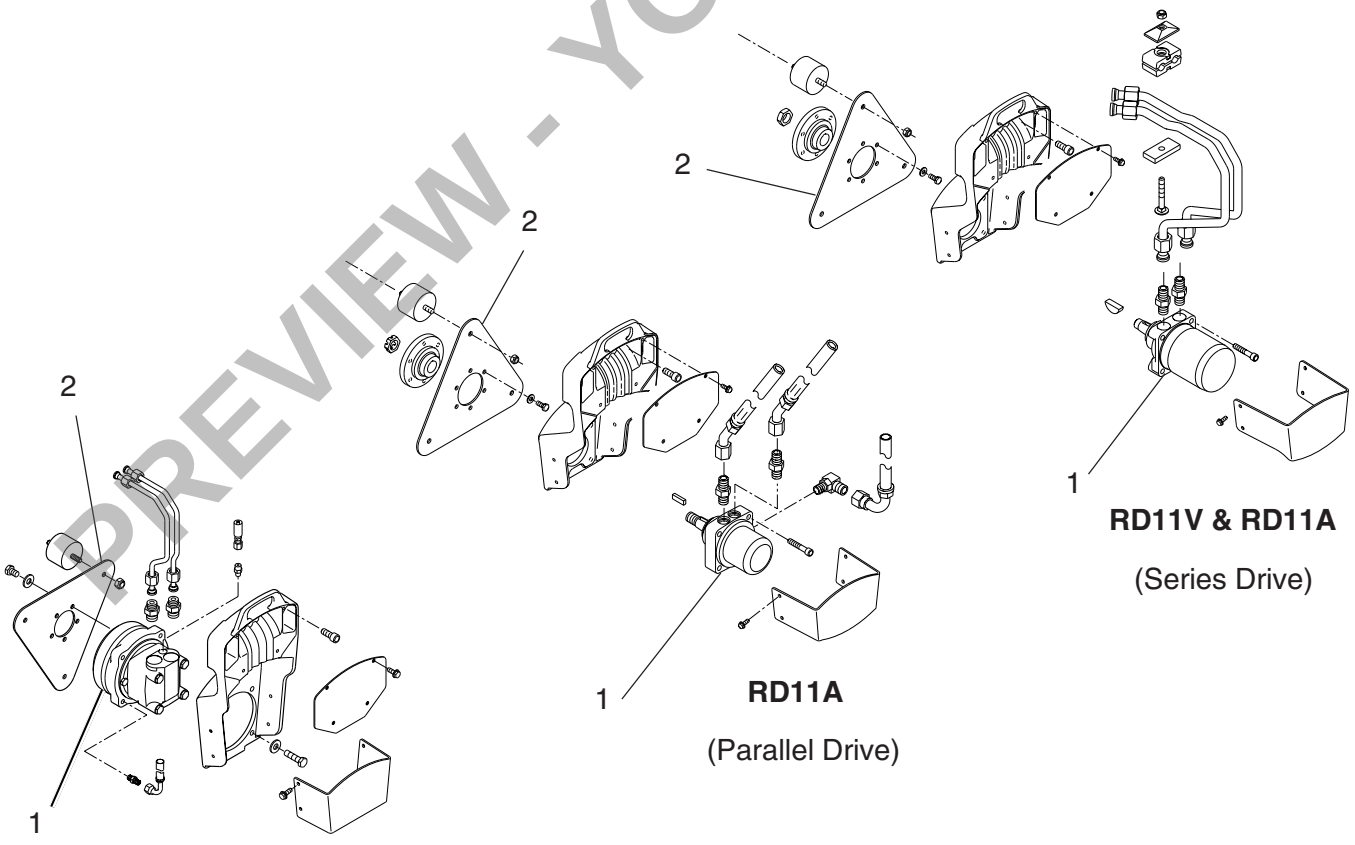

RD11V & RD11A

(Series Drive)

RD11A

(Parallel Drive)

RD11AEC

1028SD31

PREVIEW - YOUFIXTHIS.COM

Download full manual at youfixthis.com

Removal

Stop the machine, apply the parking brake, switch off the machine, set the locking arm and disconnect the battery.

CAUTION: Before removing the drum, clean and wash the complete drum assembly to remove as much dirt as possible. Be especially thorough when cleaning area around tube and hose connections on motors. This will minimize the chance of contamination when opening hydraulic lines.

1. Block rear drum.

2. Support the front machine frame by placing blocks or screw jacks **(1)** under the frame behind both sides of the drum.

> **⚠ WARNING**
>
> Only use blocks or jacks with a suitable load bearing capacity. Do not use improvised blocks or jacks.

3. Open tow valve. See Section *3.26 & 3.27 Towing Valve.*

> **⚠ WARNING**
>
> Before dismantling hydraulic connectors or hoses, ensure that all pressure has been bled from the circuit. See Section 3.22 *Bleeding the Hydraulic System.*

Note: *In the interests of environmental protection, place a plastic sheet and a container under the machine to collect the liquid which drains off, and dispose of properly.*

4. Remove drum support cover **(5)** from left side.

5. Remove screws **(15)** that mount exciter motor **(16)** to mount **(17)**.

6. Remove screws **(10)** that mount the drum support **(4)** to frame.

7. Attach ropes or chains to lifting eye of drum support **(4)**.

8. Lift drive motor assembly out of drum.

9. Pull drum assembly out from right or left side of machine.

10. Remove tube assemblies **(3)** from fittings at top of left side drum support **(4)**.

11. Remove drum support cover **(5)** from right side.

12. Remove nuts **(6)** that mount drum support **(7)** to shockmounts **(8)**.

13. Attach ropes or chains to lifting eye of drum support **(7)**.

> **⚠ WARNING**
>
> Only use steel ropes or chains for hoisting. Ropes or chains must have the suitable specified lifting capacity. Do not use improvised ropes or chains.

14. Remove screws **(9)** that mount drum support **(7)** to frame.

15. Remove nuts **(11)** that mount the drive plate **(12)** to shockmounts **(13)**. Rotate drum to access all nuts.

16. Remove drum support **(7)** from frame.

PREVIEW - YOUFIXTHIS.COM

Download full manual at youfixthis.com

7.12 Wiring Diagram (RD11AEC) (Revision 012 & Higher)

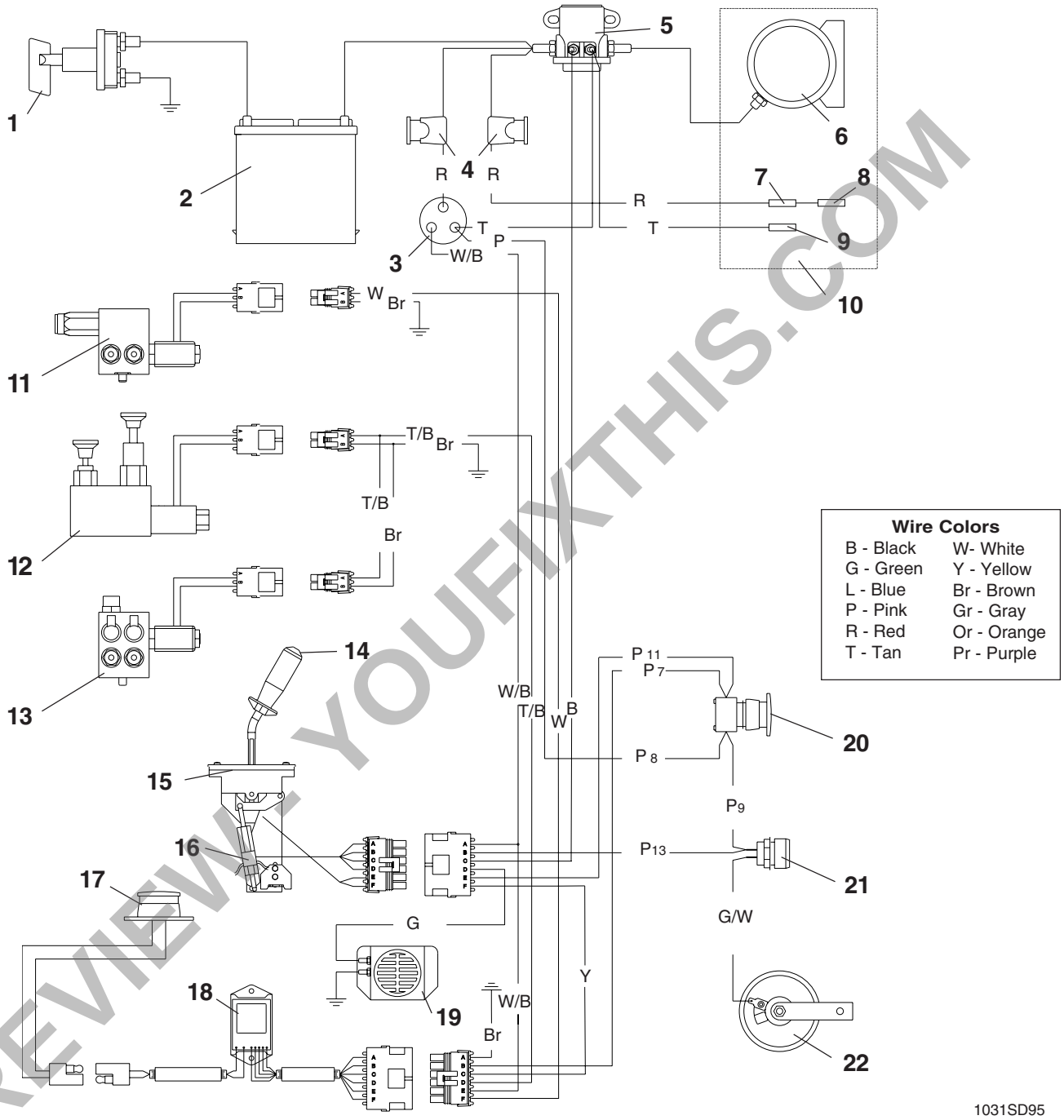

Ref	Description
1	Battery disconnect
2	Battery
3	Key switch
4	20 Amp fuse
5	Starter solenoid
6	Starter
7	Regulator / rectifier
8	Alternator
9	Anti-backfire
10	Engine
11	Exciter manifold

Ref	Description
12	Brake manifold
13	Brake bypass (towing valve)
14	Vibration switch
15	Forward/Reverse Control
16	Neutral safety switch
17	Seat switch
18	Seat switch delay and neutral start module
19	Backup Alarm (Optional)
20	Emergency stop pushbutton
21	Horn switch
22	Horn

PREVIEW: YOUFIXTHIS.COM

Download full manual at youfixthis.com

8.1 General

The troubleshooting charts which follow provide basic guidelines to help you diagnose and remedy equipment problems. Keep in mind that every possible problem cannot be anticipated. Should questions arise during the service or repair of this equipment please contact WACKER Corporation for assistance.
Before removing any parts or making adjustments conduct a visual inspection of the machine and check for:

1. Dirty air and fuel filters.
2. Rocks or dirt obstructing the movement of steering cylinder, articulated joint, drums, and scraper bar assemblies.
3. Blown electrical fuses, loose or burnt electrical connections.
4. Leaks in hydraulic lines and fittings.
5. Low oil levels in engine crankcase, exciter and hydraulic tank.
6. Loose mounting hardware on pumps, motors or tow valve.
7. Broken linkage and cables.

8.2 Drive System

Problem	Possible Cause	Remedy or Check	Pg. Ref.
Machine does not climb grade.	Drums spinning	Ground material loose or slippery.	---
	Grade too steep	Measure angle of grade.	1A-7
	Relief pressure low or relief valve defective.	Check relief pressure. Replace or adjust relief valve.	4A-12
	Drive pump or drive motors damaged or worn	Consult WACKER Corporation.	4A-13
Machine does not travel or traveles slowly or erratically.	Engine speed too low	Run engine at full throttle. Check engine RPM.	1A-7
	Hydraulic fluid cold or wrong type	Allow fluid to warm up. Check fluid against specifications.	3A-12
	Control cable ends disconnected or broken	Check cable and connections. Repair or replace as required.	---
	Control lever pin sheared	Check and repair.	5A-5
	Control lever not centered	Check neutral adjustment.	3A-14
	Drive bearings seized	Inspect drive bearings. Check bearing lubrication.	6A
	Drive pump worn or defective	Consult WACKER Corporation. Replace pump.	5A-5
	Drive motor worn	Consult WACKER Corporation. Replace motor.	6A
	Relief valve pressure low	Check and adjust relief valve.	4A-12
	Tow valve open	Close valve completely.	3A-16
	Air trapped in hydraulic oil	Check suction hose. Tighten connections or replace.	---

PREVIEW - YOUFIXTHIS.COM
Download full manual at youfixthis.com

TORQUE VALUES

Metric Fasteners (DIN)

	TORQUE VALUES (Based on Bolt Size and Hardness)						**WRENCH SIZE**			
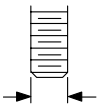	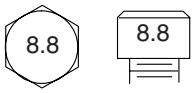		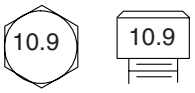		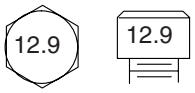		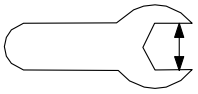			
Size	Ft.Lb.	Nm	Ft.Lb.	Nm	Ft.Lbs.	Nm	Inch	Metric	Inch	Metric
M3	*11	1.2	*14	1.6	*19	2.1	7/32	5.5	-	2.5
M4	*26	2.9	*36	4.1	*43	4.9	9/32	7	-	3
M5	*53	6.0	6	8.5	7	10	5/16	8	-	4
M6	7	10	10	14	13	17	-	10	-	5
M8	18	25	26	35	30	41	1/2	13	-	6
M10	36	49	51	69	61	83	11/16	17	-	8
M12	63	86	88	120	107	145	3/4	19	-	10
M14	99	135	140	190	169	230	7/8	22	-	12
M16	155	210	217	295	262	355	15/16	24	-	14
M18	214	290	298	405	357	485	1-1/16	27	-	14
M20	302	410	427	580	508	690	1-1/4	30	-	17

Inch Fasteners (SAE)

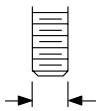	 SAE 5		 SAE 8		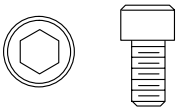		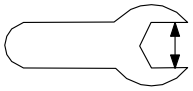			
Size	Ft.Lb.	Nm	Ft.Lb.	Nm	Ft.Lbs.	Nm	Inch	Metric	Inch	Metric
No.4	*6	0.7	*14	1.0	*12	1.4	1/4	5.5	3/32	-
No.6	*12	1.4	*17	1.9	*21	2.4	5/16	8	7/64	-
No.8	*22	2.5	*31	3.5	*42	4.7	11/32	9	9/64	-
No.10	*32	3.6	*45	5.1	*60	6.8	3/8	-	5/32	-
1/4	6	8.1	9	12	12	16	7/16	-	3/32	-
5/16	13	18	19	26	24	33	1/2	13	1/4	-
3/8	23	31	33	45	43	58	9/16	-	5/16	-
7/16	37	50	52	71	69	94	5/8	16	3/8	-
1/2	57	77	80	109	105	142	3/4	19	3/8	-
9/16	82	111	115	156	158	214	13/16	-	-	-
5/8	112	152	159	216	195	265	15/16	24	1/2	-
3/4	200	271	282	383	353	479	1-1/8	-	5/8	-

1 Ft.Lb. = 1.357 Nm

* = In.Lb.

1 Inch = 25.4 mm

PREVIEW - YOUFIXTHIS.COM

Download full manual at youfixthis.com

Nameplate

A nameplate listing the Model Number and Serial Number **OR** the Model Number, Item Number, Revision, and Serial Number is attached to each unit. Please record the information found on this plate so it will be available should the nameplate become lost or damaged. **When ordering parts or requesting service information, you will always be asked to specify the model number and serial number** OR **the model number, item number, revision, and serial number of the unit.**

My machine's numbers are:

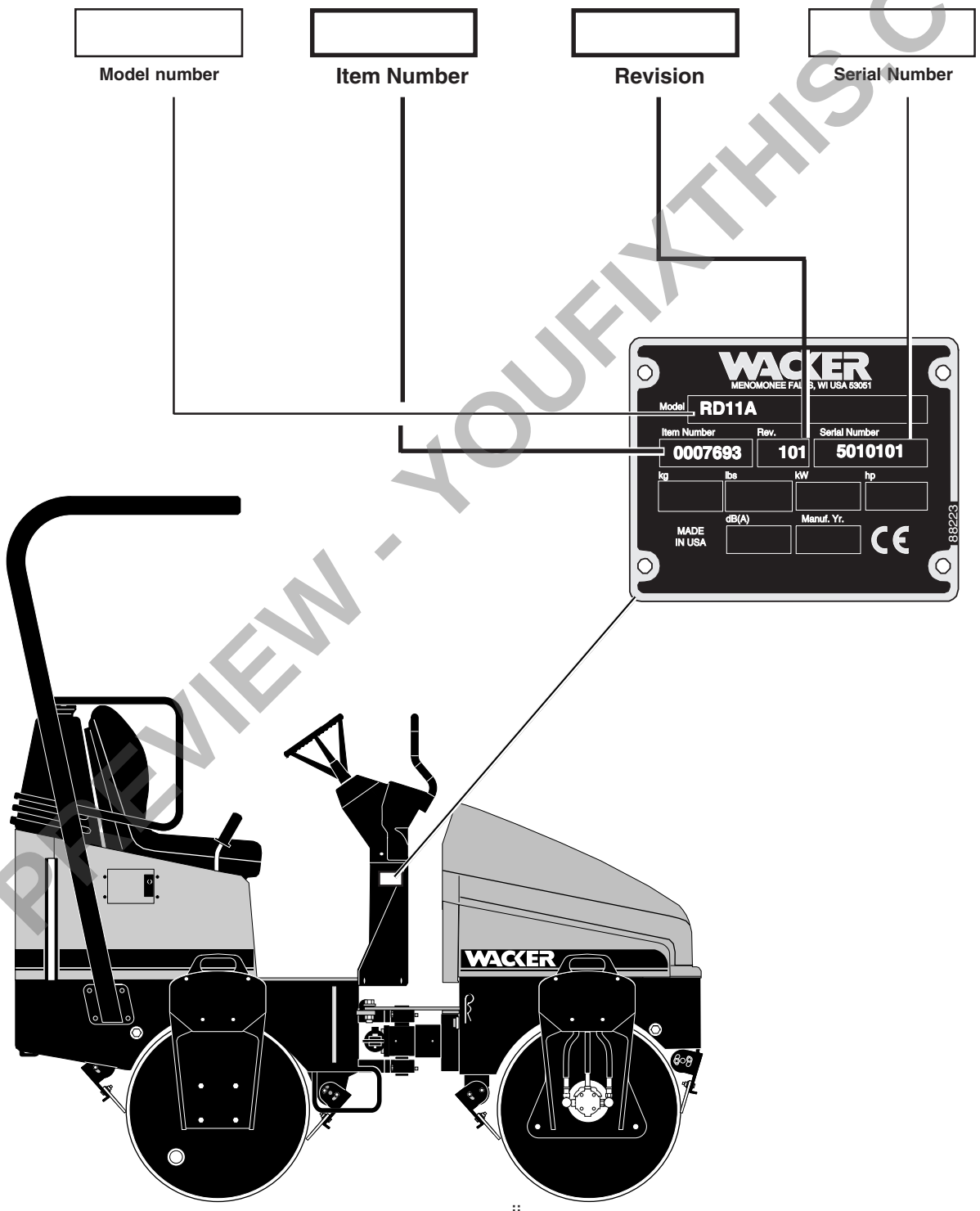

PREVIEW - YOUFIXTHIS.COM

Download full manual at youfixthis.com

5.3 Drive Pump

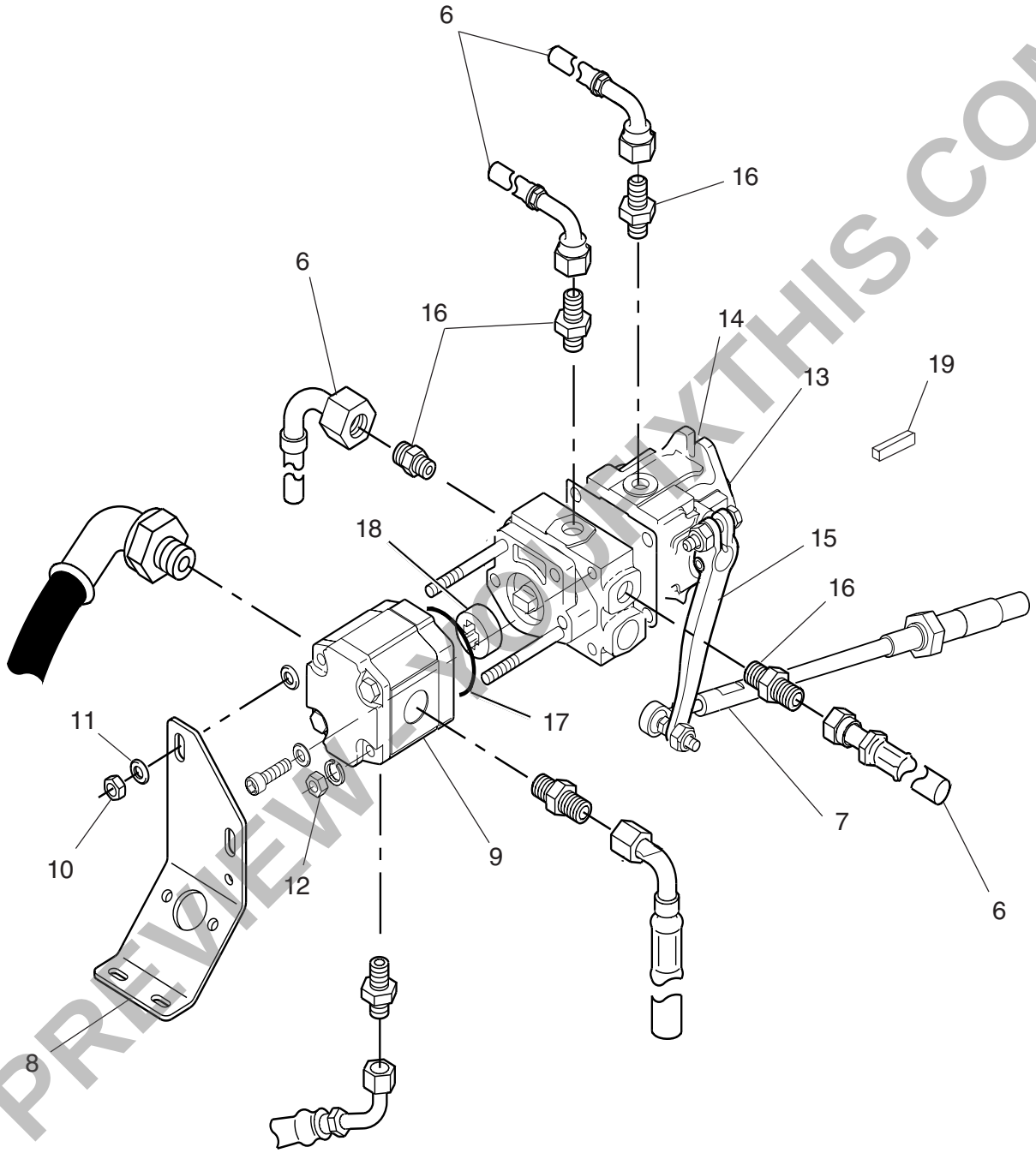

1028SD17

PREVIEW - YOUFIXTHIS.COM

Download full manual at youfixthis.com

PREVIEW ONLY

You're viewing 12 of 112 pages

The full manual includes:

- All 112 pages, complete
- Searchable PDF (find any keyword)
- No watermarks
- Instant download
- Print-ready quality

GET FULL MANUAL NOW

Wacker RD11A, RD11V, RD11AEC Repair Manual

Scan or click anywhere
youfixthis.com

Click anywhere on this page to get the full manual