1.2 Application

This machine is designed for compaction of sub-bases and backfill for foundations, roads, parking lots, etc. A selection of drum types, drum size, and two vibration modes ensures excellent compaction of cohesive-type soils, as well as loose soils and gravel. The drums protrude past the machine frame, making it ideally suited for working along trench walls, excavations, pipelines and backfill applications.

1.3 Laws Pertaining to Spark Arresters

Notice: Some states require that in certain locations, spark arresters be used on internal combustion engines. A spark arrester is a device designed to prevent the discharge of sparks or flames from the engine exhaust. It is often required when operating equipment on forested land to reduce the risk of fires. Consult the engine distributor or local authorities and make sure you comply with regulations regarding spark arresters.

1.4 Tools

Since all possible problems encountered while repairing the equipment cannot be anticipated, it is up to the mechanic to use common sense and good judgment in tool selection.

The use of any special tools is recommended only for those operations where the use of conventional tools proves inadequate.

Before substituting another tool or procedure, you should be satisfied that neither personal injury nor damage to the component will result.

1.5 Reference Numbers ( )

Repair procedures contain reference numbers enclosed in parentheses ( ). These numbers refer to the item numbers shown on the assembly drawings and other detailed drawings. They are included to aid the mechanic in identifying parts and assembling components.

1.6 Ordering Parts

The repair procedures contained in this manual do not include part numbers. For parts replacement information, refer to the Parts Manual originally supplied with the unit.

If the original Parts Manual has been lost, a replacement manual may be ordered from WACKER Corporation. When ordering a replacement Parts Manual, please list model number, item number, and serial number of machine.

PREVIEW - YOUFIXTHIS.COM

Download full manual at youfixthis.com

2.4 Cold Weather Starting

The engine is equipped with a glow plug system to pre-heat the intake manifold and improve cold weather starts.

The preheat button **(g)** is located next to the key switch on the machine control panel. Hold the button in for 10–20 seconds to pre-heat the intake manifold.

Crank the engine immediately after releasing the button.

Do not hold the pre-heat button in longer than 30 seconds or the glow plug system may be damaged.

Allow 10–15 minutes for the engine to warm up before operating the roller.

2.5 Position of Operator

Although the receiving eye on the machine can receive signals from any direction, the switches on the transmitter are positioned so that they correspond to the movements of the machine with the operator standing **BEHIND** it.

For instance, when standing behind the machine **(h),** pushing forward on the forward/reverse switch causes the machine to move away from the operator, pushing left on the steering switch would result in the machine turning left, etc.

As the operator changes positions in the work area, it is important that he or she understand the changes that will occur in the control of the machine.

If the operator stands in front of the machine **(i)**, it will respond in a direction opposite in relation to the operator. That is, pushing forward causes the machine to move toward the operator, pushing left results in the machine turning to the operator's right.

⚠ WARNING

The roller will not stop if it approaches the operator or other personnel from the front. **ALWAYS** be sure that all other persons are at a safe distance from the machine. Stop the machine if people step into the work area of the machine.

2.6 Stopping

Turn vibration off. Unlock the throttle control and push it in to return the engine to idle speed. Toggle the ON/OFF toggle switch **(c)** forward or **"O"** to stop the engine. Turn the key switch **(b)** on the machine to off.

Note: *The engine cannot be shut down using the throttle control alone. The throttle lever only returns the engine to idle speed.*

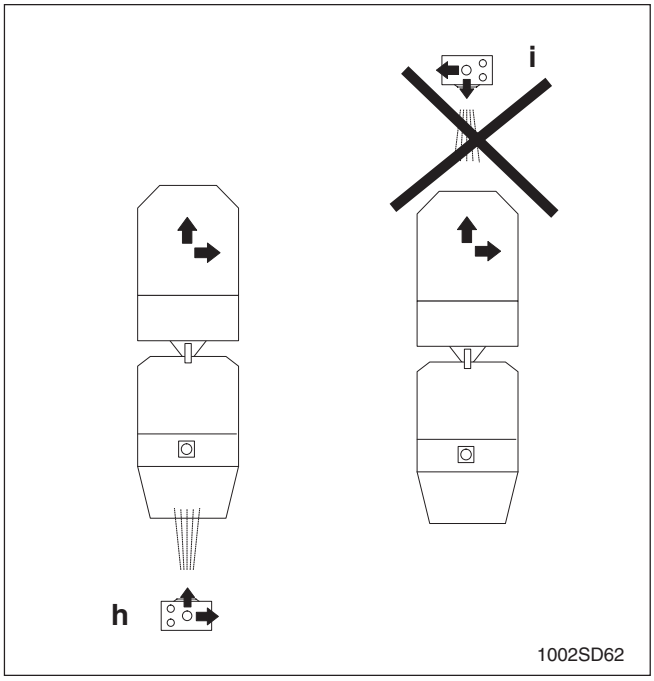

PREVIEW.YOUFIXTHIS.COM

Download full manual at youfixthis.com

5.12 Drive Housing Components

Disassembly:

1. Remove drums from roller. See *Section 5.3 Drums.*
2. Remove drive housing from the drum support. See *Section 5.6 Drive Housing.*
3. Drain oil from drive housing. See *Section 5.7 Changing Oil.*
4. Remove drive motor (see *Section 5.10 Drive Motor*) and brake assembly (see *Section 5.9 Brake*) from drive housing.
5. Loosen the five M8 screws **(6)** and lift gear cover **(7)** from drive housing **(8)**.
6. Press shaft seal **(9)** from gear cover.
7. Remove retaining ring **(10)** holding gear **(11)** to drive axle **(12)**. Use three M12 x 90 hardened bolts **(c)** (P/N 11411) to push drive gear from drive housing and off of drive axle. If necessary, heat gear to aid in its removal.
8. Remove key **(13)** from drive axle **(12)** and pull axle from drive housing **(8)**. If necessary, use three M16 x 55 screws **(d)** (P/N 11518) to push axle from drive housing.
9. Remove retaining ring **(14)** and press roller bearing cage **(15)** from drive housing **(8)**.
10. Remove seals **(16 & 17)** from drive housing **(8)**.
11. Remove key **(18)** from drive axle **(12)**.
12. Use a small propane torch and heat inner bearing race **(19)** and spacer **(20)** sufficiently until they drop off axle.

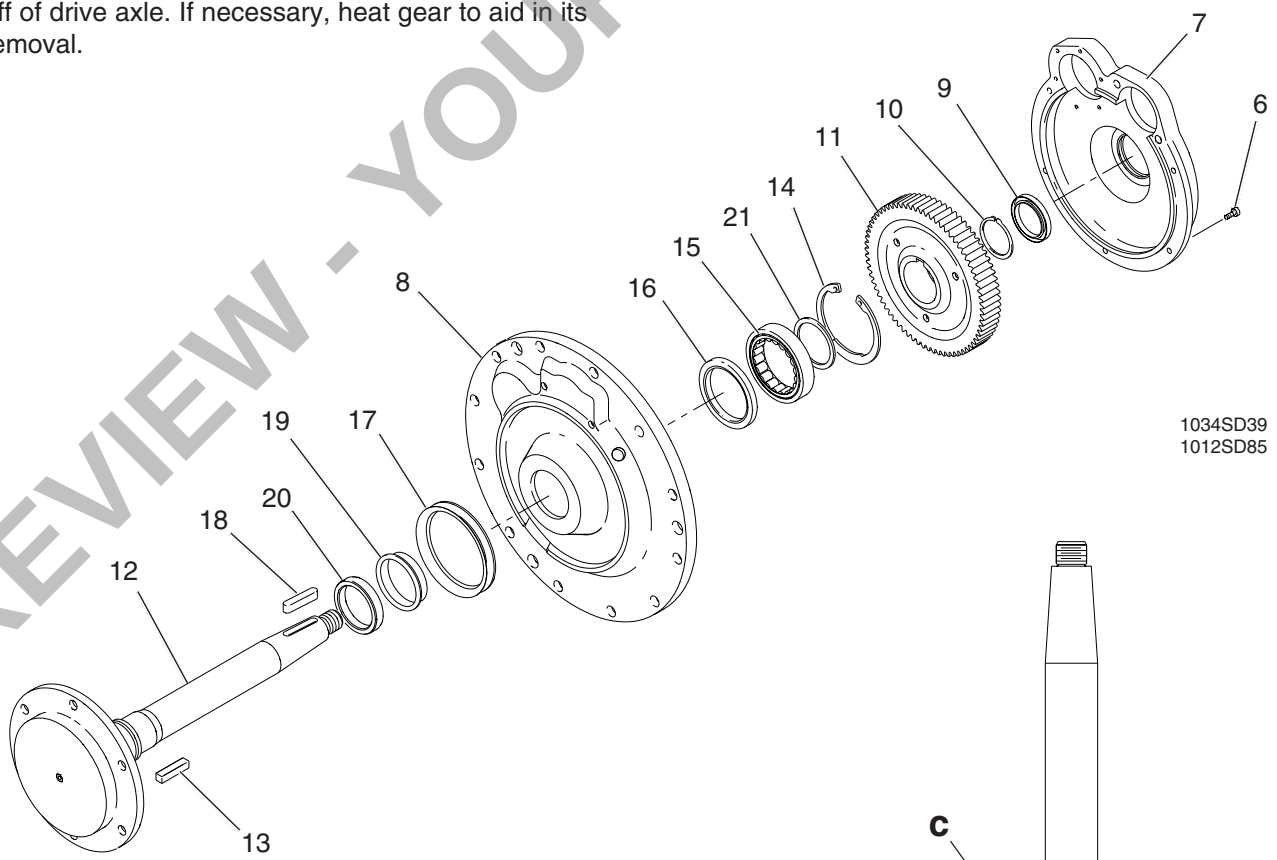

PREVIEW - YOUFIXTHIS.COM

Download full manual at youfixthis.com

6.6 Exciter Motor, Coupling & Pinion Gear (cont.)

Replacement of the exciter pinion gear, bearings, and coupling requires removal of the exciter assembly from the drum support. Replacement, or service, to only the exciter motor can be performed by removing the drum support cover *(see Section 5.4 Drum Support Cover)* to gain access to the motor.

Removal:

1. Remove drum, drum support cover, and drive housing assembly. See *Sections 5.3, 5.4, 5.6.*

2. Remove exciter assembly from drum support. See *Section 6.4 Exciter.*

Refer to *Section 6.6 Exciter Components* when completing steps 3, 4 & 5.

3. Remove drain plug **(26)** and drain oil.

4. Remove exciter base cover **(23)**.

5. Remove exciter gear cover **(28)**.

6. Remove two screws **(9)** and washers **(10)** mounting exciter motor **(4)** to exciter housing **(41)**.

7. Pull sleeve coupler **(13)** from inner coupling **(11a)** on pinion gear shaft **(19)**.

8. Reach through bottom of exciter housing and loosen set screw **(12a)** holding inner coupling **(11a)** to pinion gear shaft **(19)**. Remove inner coupling by prying off with large screw driver or gear puller.

9. Remove retaining ring **(14)**.

10. Remove key **(18)** from pinion gear shaft **(19)** in housing.

11. Use a press or rubber mallet to drive pinion gear **(19)** out of housing.

Note: *The roller bearings **(15a)** will remain in the housing.*

12. Remove spacer **(17)** and bearing race **(15b)** from pinion gear shaft.

13. Drive roller bearing **(15a)** out of housing using a rubber mallet and steel punch as shown **(b)**. The bearing will be damaged or destroyed in the process and **must be replaced**.

14. Remove retaining rings **(16)** from housing.

15. Press remaining bearing **(15a)** from housing.

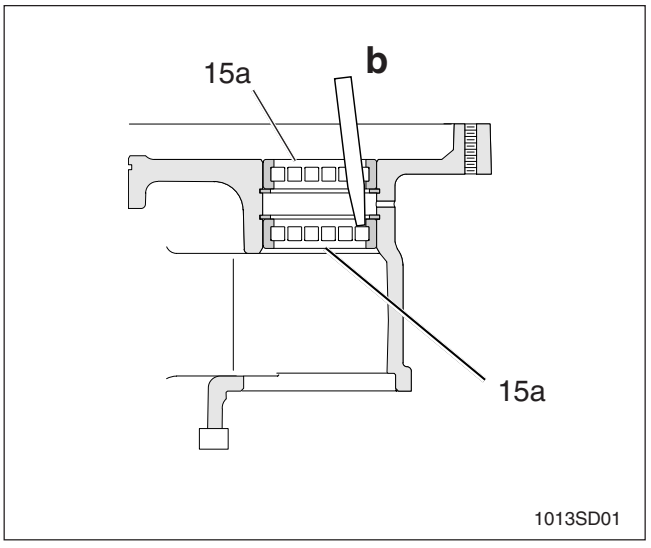

PREVIEW - YOUFIXTHIS.COM

Download full manual at youfixthis.com

7.8 Articulated Joint (cont.)

Removal:

1. Heat the M12 screws **(8)** holding pivot brackets **(5)**, using a small propane torch to break down the threadlocking compound. Remove screws and bracket.

2. Remove M16 screw **(7)** from top and bottom joint.

3. Tap out pivot pin **(6)** from bracket portion of machine frame.

Note: *Pivot pin is removed from top to bottom on uppermost bracket and from bottom to top on lower bracket.*

4. Slide pivot bracket **(5)** and washer **(2)** out of machine frame.

5. After pivot bracket is off, place pivot pin **(6)** back into it as shown. Use an arbor or hydraulic press to push against pin **(d)** and press bearing **(3)** out of bracket.

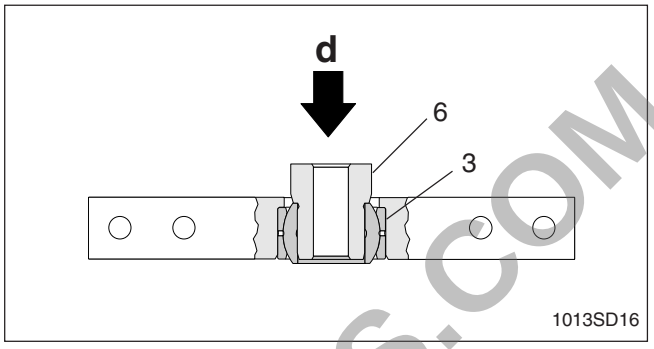

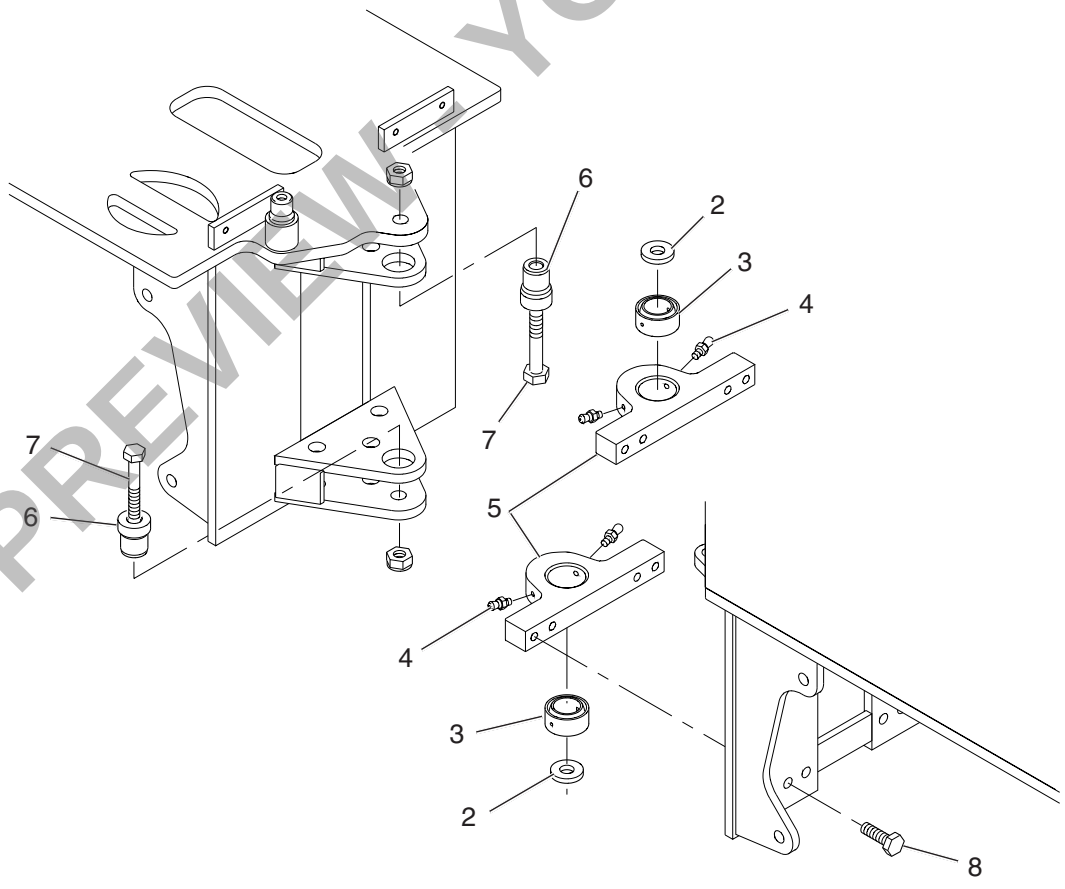

PREVIEW YOUFIXTHIS.COM

Download full manual at youfixthis.com

8.7 Engine (Relays)

Removal

1. Remove three M8 locknuts **(1)** mounting air cleaner mounting plate **(2)** to engine. Save ground strap **(3)**.

2. Remove three M8 studs **(4)** from engine.

Note: *Relays are interchangeable for quick trouble-shooting of possible defective relay.*

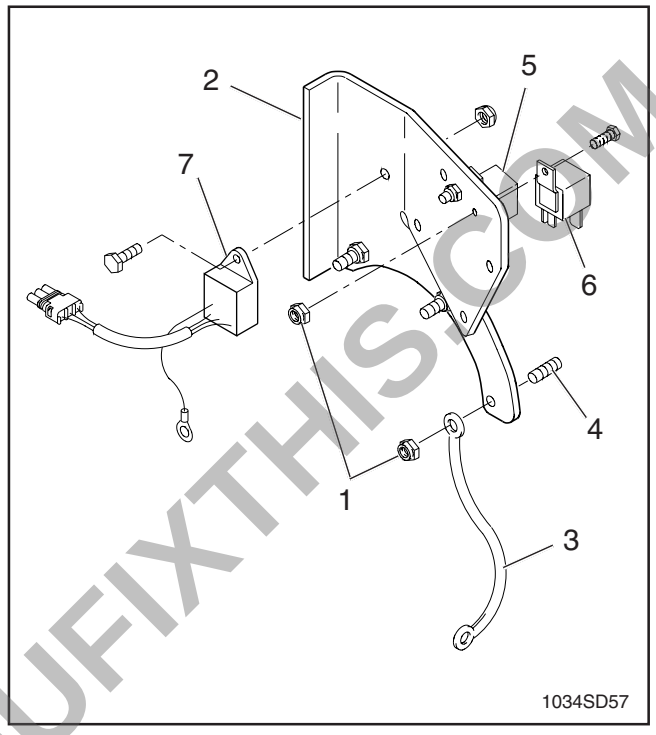

Installation

1. Install three M8 studs **(4)** into engine. Secure studs using Loctite 271 or an equivalent high strength threadlocking compound.

2. Inspect and secure glow plug relay **(5)**, starter relay **(6)**, and anti-restart module **(7)**.

3. Line up mounting holes in air cleaner mounting plate **(2)** with studs **(4)** in engine. Secure plate to engine using M8 locknuts **(1)**.

Note: *Install ground strap **(3)** on lower stud.*

Testing Anti-Restart Module

1. Ensure brown ground wire is securely attached to the engine.

2. The white wire connects the engine oil pressure switch to the engine oil pressure switch indicator light via the anti-restart module. Ground the white wire to the engine frame and make sure the engine oil light turns on. Try to start the engine.

3. To eliminate the anti-restart module, unplug the 3-position wire connector. Ground the black wire from the plug end to the engine (opposite the anti-restart module) leading to the starter relay. Test start the engine. If this allows the engine to start, replace the anti-restart module.

PREVIEW - YOUFIXTHIS.COM

Download full manual at youfixthis.com

9.1 CombiControl Transmitter

- Wireless control
- Line of sight operation
- 3 control channels
- Clear transmissions into direct sunlight, up to 100,000 LUX
- Maximum Range - 65 ft. (20 m)
- Transmitting time - 8 hours
- Recharge time - ≤ 40 minutes
- Batteries - Ni-cad battery pack

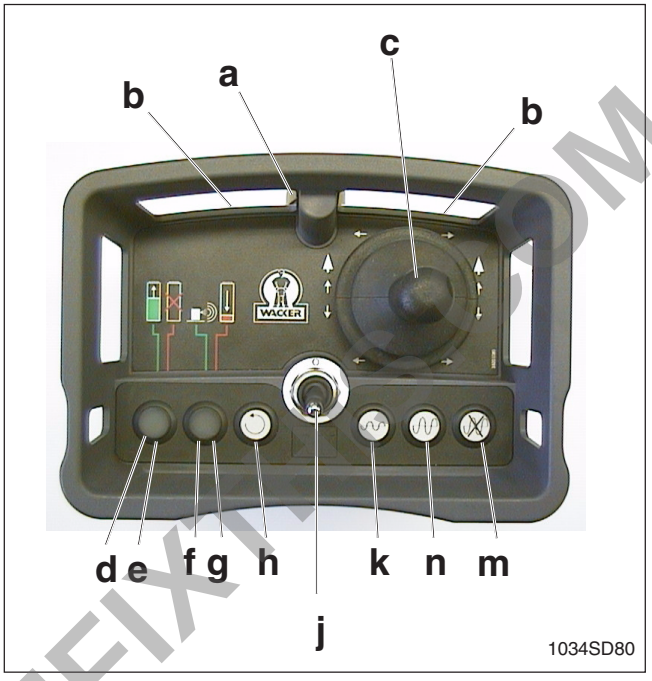

The standard operating controls include:

- **a** cable connector
- **b** infra-red emitting diodes
- **c** joystick
- **d** battery charge indication (green LED)
- **e** battery failure (red LED)
- **f** power ON indication (green LED)
- **g** charging required indication (red LED)
- **h** engine START pushbutton
- **j** ON/OFF toggle switch
- **k** LOW vibration pushbutton
- **m** vibration OFF pushbutton
- **n** HIGH vibration pushbutton

Cable connector

The cable connector **(a)** provides both control and battery charging capabilities. Transmitter batteries are recharged while the engine is running.

Infra-red emitting diodes

Diodes **(b)** are used to transmit the coded infra-red signal to the receiving eye on the machine. Keep the window in front of the diodes clean to ensure maximum signal strength.

Joystick

A single joystick **(c)** controls all low- and high- speed forward / low-speed reverse and left/right motion of the roller. Move the joystick in the direction desired. In forward mode, the roller will change to high speed when the joystick is pressed fully forward.

⚠ WARNING

If the joystick has been damaged or disassembled, the engine will not start. DO NOT attempt to jump start the engine. The machine may proceed in the direction of the broken joystick.

PREVIEW - YOUFIXTHIS.COM

Download full manual at youfixthis.com

9.9 Operating Characteristics

In some instances objects passing between the machine and transmitter (such as support beams) will block the signal. When this occurs the fuel valve will close and the engine will shut down, unless the signal can be re-established within 5–10 seconds.

⚠ WARNING

In an enclosed area (such as a shop floor or warehouse) or an area surrounded by large structures, the infra-red signal may reflect off surrounding surfaces, causing it to be picked up by the machine even when the transmitter is pointed away from the machine. This condition is more pronounced at shorter distances when the signal strength is strong.

As the distance between the transmitter and machine increases, the intensity of the signal diminishes.

⚠ WARNING

When operating the machine using the cable connector system, **DO NOT** leave the transmitter unattended while the engine is still running. Accidental application of the joystick or other control could result in movement of the roller and may cause serious injury.

9.10 Decoder Module

The decoder module **(d)** is positioned behind the rear panel at the back of the machine. It receives, decodes and outputs the signal from either the control cable or IR transmitter. It is also the power supply for all electronic functions. It includes a channel selection microswitch.

A channel selection microswitch is also included in the transmitter module. For operation of the remote control systems **BOTH** switches must be set to the **SAME** channel.

The LED's (green and red) are there for diagnostic aiding. They are:

- The green LED **(f)** will light when the decoder is receiving a control signal (joystick movement).
- The red LED **(g)** will be constantly on for machines 9000 & 9002.

9.11 Setting Control Channels

The remote control system can be tuned to 3 different channels. This allows three machines to operate in the same area without interference.

A channel selection microswitch **(e)** is included in the CombiControl transmitter module and in the decoder module **(d)**, which is located under the rear panel at the back of the machine.

For operation of the remote control systems **BOTH** switches must be set to the **SAME** channel.

The channel comes preset from the factory to Channel 1.

To change the control channels:

Remove the four screws holding the CombiControl Transmitter box together and carefully pull it apart. Remove the rear panel covering the decoder module. Press **both** of the microswitches to change the channel to any of the three channel positions.

Make a note of the channel in use, and label the CombiControl Transmitter box and machine to identify the correct channel.

Note: *To check that the machine and the CombiControl Transmitter box are set to the same channel, turn them both on. The amber light on the machine will come on but it will NOT blink if the decoder module and the transmitter module are not set to the same channel.*

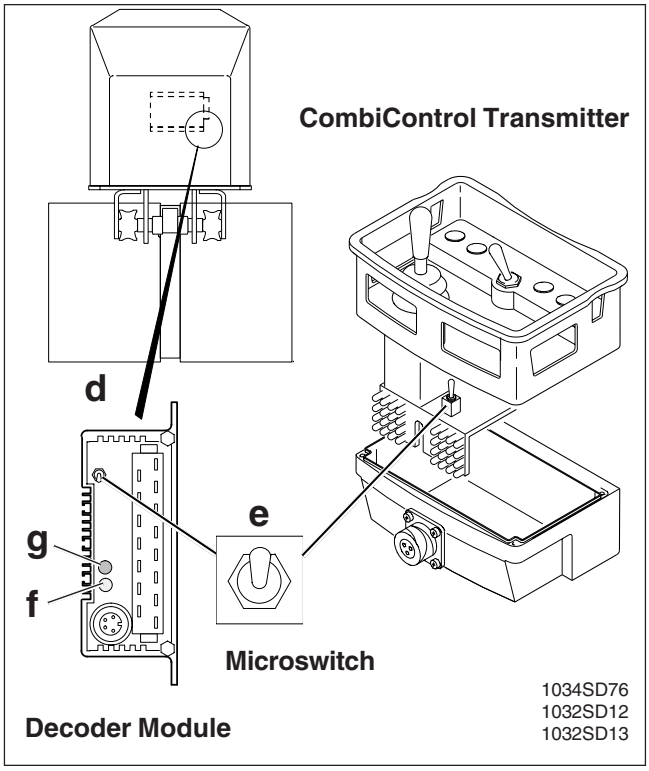

PREVIEW - YOUFIXTHIS.COM

Download full manual at youfixthis.com

2.2 Before Starting

Before starting the machine check the following:

- Engine oil level
- Condition of the air cleaner
- Fuel level
- Hydraulic fluid level

2.3 Starting

To operate the machine using infra-red remote control, the CombiControl Transmitter must be disconnected from the machine and the cable must be plugged into the receiving eye. See Section 9.5 *Operation.*

1. Pull up the throttle control handle **(a)** to open the engine throttle. Lock it in position by rotating the handle clockwise, until tight.
2. Turn the key switch **(b)** on the machine to the ON position.
3. Reset the ON/OFF toggle switch **(c)** on the CombiControl Transmitter by toggling it backward or **"I"** and verify that the green LED **(d)** comes on.
4. Press the no vibration pushbutton **(e)** on the CombiControl Transmitter to ensure vibration is off.
5. Press the engine start button **(f)** and hold it down until the engine starts. Leave the key switch on while operating the roller.

CAUTION: DO NOT crank the engine more than 15–20 seconds at a time or starter motor may overheat. Wait 30–45 seconds between start-up attempts so that the starter motor can cool down.

6. Allow the engine to warm up for a few minutes before operating the machine.

The yellow indicator light on top of the machine will come on when the key switch is first turned on and will begin flashing when the on-off switch on the CombiControl Transmitter is switched on. It will continue to flash while the machine is running. If the joystick is pressed fully forward, the roller will go into high-speed travel, and the amber light will blink rapidly.

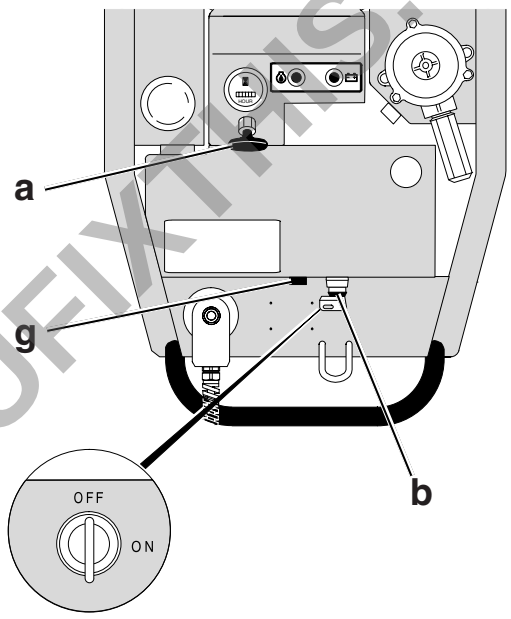

1029SD43

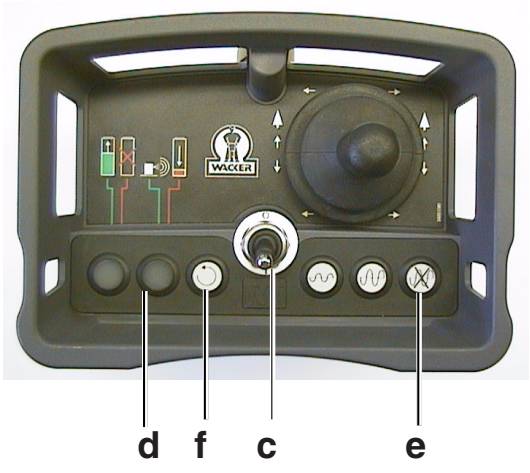

1034SD80

PREVIEW - YOUFIXTHIS.COM

Download full manual at youfixthis.com

3.4 Air Cleaner

Filter Indicator

The air intake system is equipped with a filter indicator **(a)**. The indicator is mounted to the air intake tube on the filter cannister and can be viewed by opening the front hood. Replace filter element when the indicator appears in or near the red line **(b)**. Push in black rubber button **(c)** on top of indicator to reset it after replacing filter element.

Check condition of air cleaner daily, before starting machine, and replace element when needed.

Replacing Air Cleaner

Lift front hood and open access door on right side of machine. Remove wing nut holding bottom cover **(h)** and remove cover. Screw off wing nut **(f)** to remove filter element.

Clean inside of air cleaner cannister to remove dirt and dust, especially in area where rubber gasket on filter **(d)** seals against air intake tube.

Inspect rubber washers **(e)** and O-ring **(g)**. Replace if damaged. Install new filter. Tighten wing nut snugly to ensure that both the top and bottom of the filter is sealed.

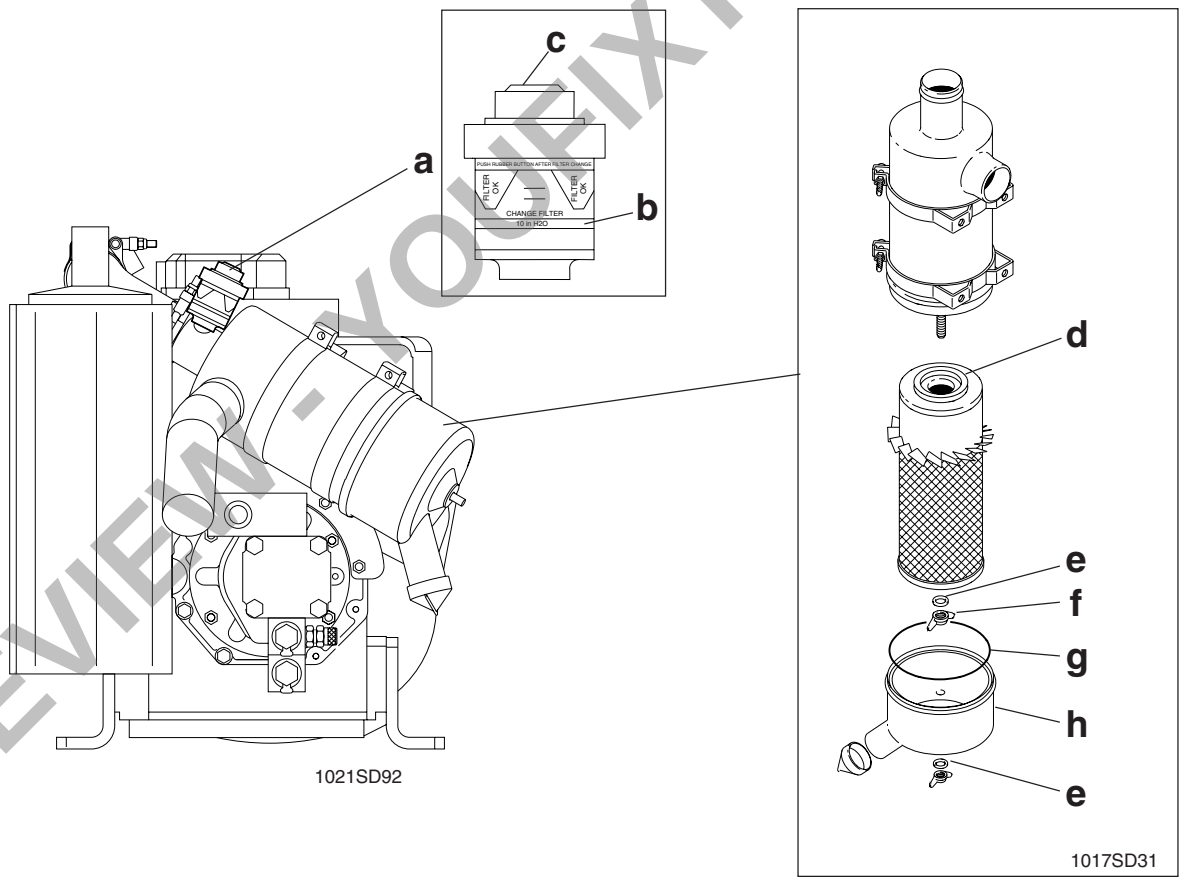

PREVIEW - YOUFIXTHIS.COM

Download full manual at youfixthis.com

RT560 / RT820
General

1A

Table of Contents

1.1 Safety Information 1A-2
1.2 Application 1A-3
1.3 Laws Pertaining to Spark Arresters 1A-3
1.4 Tools 1A-3
1.5 Reference Numbers ( ) 1A-3
1.6 Ordering Parts 1A-3
1.7 Operating Safety 1A-4
1.8 Service Safety 1A-5
1.9 Operator Safety while using Internal Combustion Engines 1A-5
1.10 Sound Level Values 1A-6
1.11 Dimensions 1A-6
1.12 Technical Data 1A-7

PREVIEW - YOUFIXTHIS.COM

Download full manual at youfixthis.com

1.1 Safety Information

This manual contains DANGER, WARNING, CAUTION, and NOTE callouts which must be followed to reduce the possibility of personal injury, damage to the equipment, or improper service.



This is the safety alert symbol. It is used to alert you to potential personal injury hazards. Obey all safety messages that follow this symbol to avoid possible injury or death.

⚠ DANGER

DANGER indicates an imminently hazardous situation which, if not avoided, will result in death or serious injury.

⚠ WARNING

WARNING indicates a potentially hazardous situation which, if not avoided, could result in death or serious injury.

⚠ CAUTION

CAUTION indicates a potentially hazardous situation which, if not avoided, may result in minor or moderate injury.

CAUTION: Used without the safety alert symbol, CAUTION indicates a potentially hazardous situation which, if not avoided, may result in property damage.

Note: *Contains additional information important to a procedure.*

PREVIEW - YOUFIXTHIS.COM

Download full manual at youfixthis.com

PREVIEW ONLY

You're viewing 12 of 130 pages

The full manual includes:

- All 130 pages, complete
- Searchable PDF (find any keyword)
- No watermarks
- Instant download
- Print-ready quality

GET FULL MANUAL NOW

Wacker RT560, RT820 Repair Manual

Scan or click anywhere
youfixthis.com

Click anywhere on this page to get the full manual