1.2 Specifications

(1) 3JH3E, 3JH3BE, 3JH3CE, 3JH4ME

Official engine model name	unit	3JH4E			
Company internal model name	-	3JH4E	3JH4BE	3JH4CE	3JH4ME
Marine gear model	-	KM35P	KM35A	SD40	Bobtail
Use	-	Pleasure use			
Type	-	Vertical water cooled 4 cycle diesel engine			
Combustion system	-	Direct injection			

Blurred on purpose. The manual you buy has this page in full quality.

PREVIEW - YOUFIXTHIS.COM

Download full manual at youfixthis.com

2. Inspection and Adjustment

2.1 Periodic Maintenance Schedule

The engine periodic inspection timing is hard to determine as it varies with the application, load status, qualities of the fuel and lubricating oils used and handling status. General rules are described here.

○ : User-maintenance ◎ : Parts replacement ● : Shop-inspection

System	Item		Before starting	*2 Initial 50hrs. or one month	*2 Every 50hrs. or one month	*2 Every 250 hrs. or one year	*2 Every 1000 hrs. or 4 years
Whole	Visual inspection of engine outside		○				
Fuel system	Check the fuel level, and refill		○				
	Drain the fuel tank			○		○	
	Drain the fuel/water separator				○		
	Replace the fuel filter					◎	
	Check the injection timing						●
	Check the injection spray condition						●*1
Lubricating system	Check the lube oil level	Crankcase	○				
		Marine gear	○				
	Replace the lube oil	Crankcase		◎		◎	
		Marine gear		◎		◎	
	Replace the engine lube oil filter.			◎		◎	
Cooling system	Seawater outlet		○ (During operation)				
	Check cooling water level		○				
	Check the impeller of the cooling water pump (seawater pump)					○	◎
	Replace the fresh water		Every year When long life coolant of the specified type is used, the replacement period of two years can be obtained.				
	Clean & check the water passages						●
Air intake and exhaust system	Clean the element of the air intake silencer		-				
	Clean the exhaust/water mixing elbow					○	
	Diaphragm assembly inspection						●
Electrical system	Check the alarm lamps & devices		○				
	Check the electrolyte level in the battery				○		
	Adjust the tension of the alternator driving belt			○		○	◎
	Check the wiring connectors					○	

PREVIEW - YOUFIXTHIS.COM

Chart 1

TROUBLE AND TROUBLESHOOTING

THE ENGINE SUDDENLY STOPS.

Countermeasure

(I-1) Add fuel oil and prime.
(I-2) Bleed air.
(I-3) Remove water from drain and fuel oil system and prime.
(I-4) Check and make necessary repairs.
(I-5) Clean.
(I-6) Replace.
(I-7) Check and make necessary repairs.

(II-1) Replace.
(II-2) Clean carefully to insure good working order.

Cause and Effect

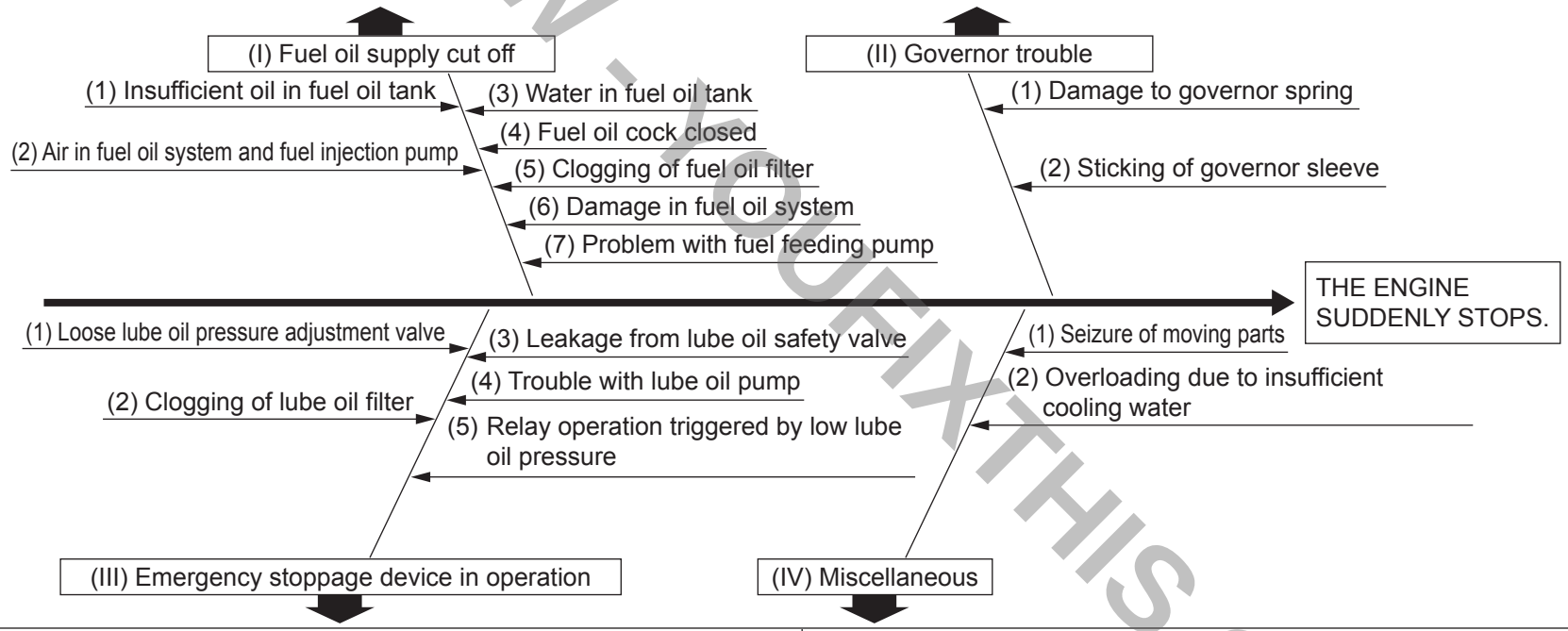

Countermeasure

(III-1) Tighten adjustment valve.
(III-2) Clean.
(III-3) Tighten safety valve.
(III-4) Remove and repair or replace.
(III-5) Return to original condition.

(IV-1) Remove and repair or replace.
(IV-2) Disassemble and clean cooling water pump and check cooling water system.

PREVIEW - YOUFIXTHIS.COM

5.2 Cylinder Head

The cylinder head is of 3-cylinder integral construction, mounted with 14 bolts. Special alloy stellite with superior resistance to heat and wear is fitted on the seats, and the area between the valves is cooled by the water jet.

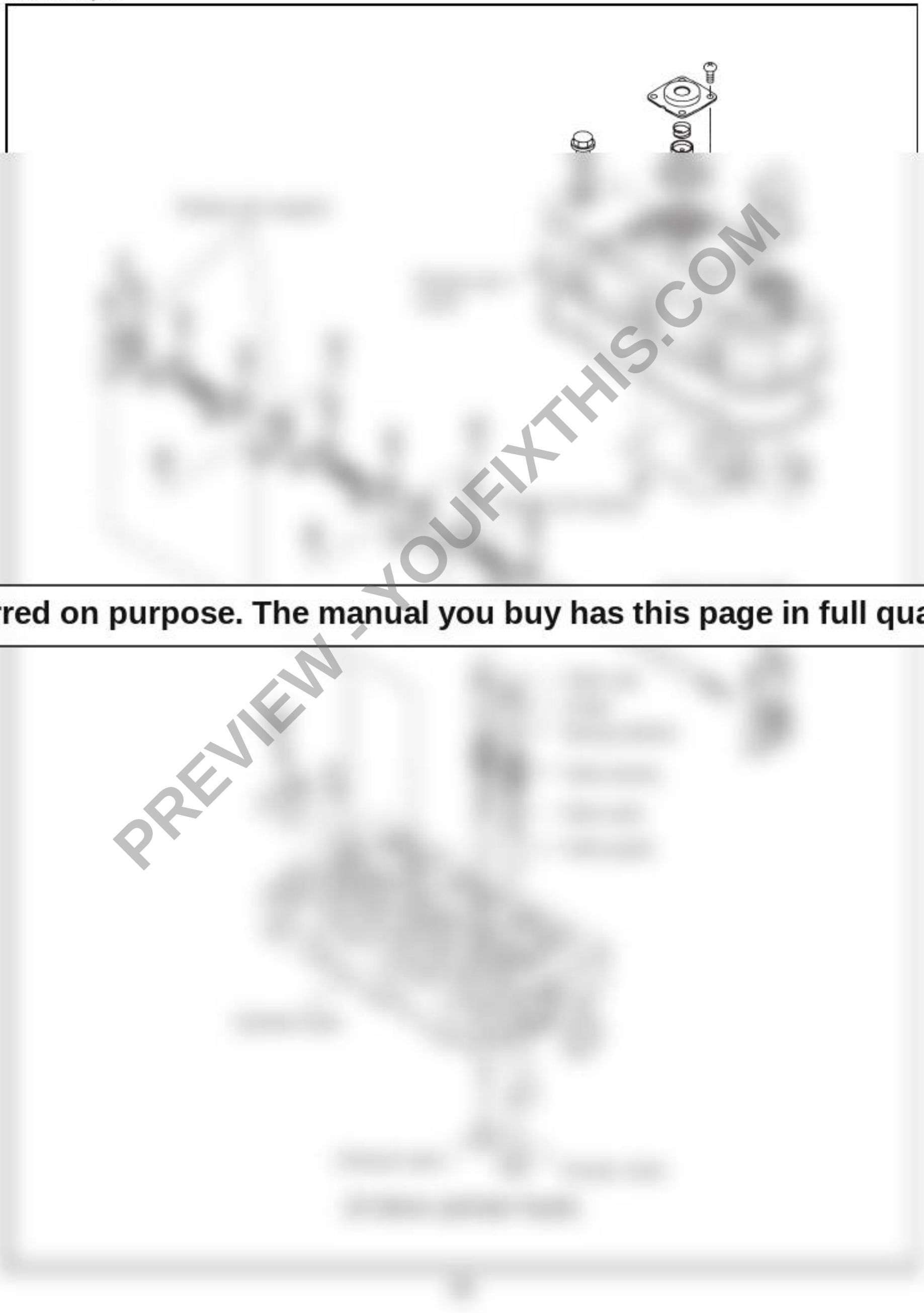

Blurred on purpose. The manual you buy has this page in full quality.

PREVIEW - YOUFIXTHIS.COM

Download full manual at youfixthis.com

8. LUBRICATION SYSTEM

8.1 Lubrication System

The lube oil in the oil pan is pumped up through the intake filter and intake piping by the lube oil pump, through the holes in the cylinder block and on to the lube oil pump, through the holes in the cylinder block and on to the discharge filter.
The lube oil, which flows from the holes in the cylinder block through the bracket to the oil element, is filtered after the oil cooler. It is fed to main gallery in the cylinder block.
The lube oil which flows in the main gallery goes to the crankshaft journal, lubricates the crank pin from the crankshaft journal, and a option of the oil is fed to the camshaft bearings.

Blurred on purpose. The manual you buy has this page in full quality.

PREVIEW - YOUFIXTHIS.COM

Download full manual at youfixthis.com

9.5.5 Function of the coolant recovery tank

The pressure valve opens to discharge steam when the steam pressure in the fresh water tank exceeds 82-109 kPa (0.84-1.11 kgf/cm^2).
This consumes water. The coolant recovery tank maintains the water level by preventing this discharge of water.
The steam discharged into the coolant recovery tank condenses into watch, and the water level in the tank rises.

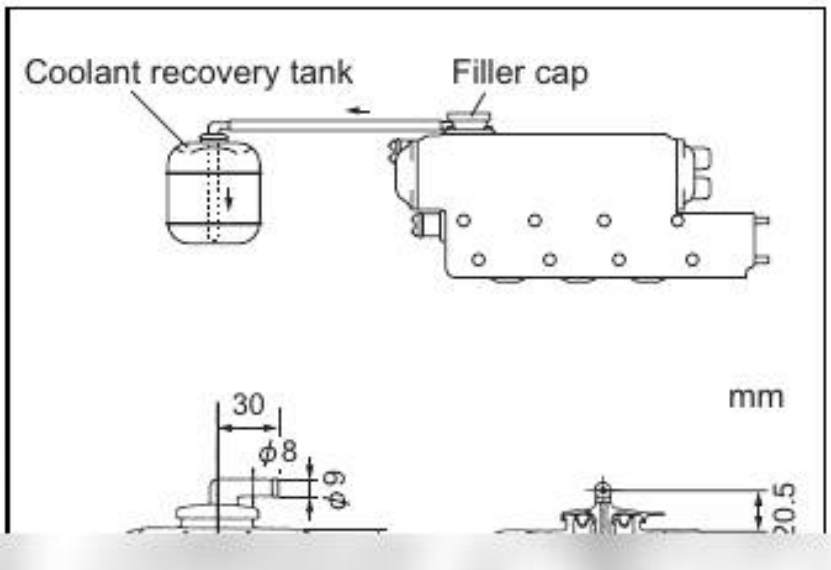

PREVIEW - YOUFIXTHIS.COM

Blurred on purpose. The manual you buy has this page in full quality.

Download full manual at youfixthis.com

14. TIGHTENING TORQUE FOR BOLTS AND NUTS

14.1 Main Bolt and Nut

No	Name	Thread diameter x pitch (mm)	Lubricating oil application (thread portion, and seat surface)	Torque N•m(kgf-m)
1	Head bolt	M10 x 1.25	Coat with lube oil	85.2-91.2 (8.69-9.30)
2	Rod bolt	M9 x 1.0	Coat with lube oil	44.1-49.1 (4.50-5.01)
3	Flywheel retainer bolt	M10 x 1.25	Coat with lube oil	83.3-88.3 (8.49-9.00)

Blurred on purpose. The manual you buy has this page in full quality.

PREVIEW - YOUFIXTHIS.COM

Download full manual at youfixthis.com

CONTENTS

1. GENERAL 1
1.1 Exterior Views 1
1.2 Specifications 2
1.3 Engine Outline 4
1.4 Piping Diagrams 7
1.5 Exhaust Gas Emission Regulation 9
1.5.1 Engine identification (3JH4E) 9
1.5.2 Exhaust Gas Regulations 10
1.5.3 Guarantee Conditions for Emission Standard 10
2. Inspection and Adjustment 12
2.1 Periodic Maintenance Schedule 12
2.2 Periodic Inspection and Maintenance Procedure 14
2.2.1 Check before starting 14
2.2.2 inspection after initial 50 hours or one month operation 17
2.2.3 Inspection every 50 hours or monthly 22
2.2.4 Inspection every 250 hours or one year 26
2.2.5 Inspection every 1,000 hours or four years 31
2.3 Adjusting the no-load maximum or minimum speed 38
2.4 Sensor Inspection 38
2.4.1 Oil pressure switch 38
2.4.2 Thermo switch 38
2.5 Thermostat inspection 39
2.6 Adjusting Operation 40
2.6.1 Preliminary Precautions 40
2.6.2 Adjusting operation procedure 40
2.6.3 Check Points and Precautions During Running 41
2.7 Long storage 42
3. Troubleshooting 43
3.1 Preparation before troubleshooting 43
3.2 Quick Reference Chart for Troubleshooting 44
3.3 Troubleshooting (Concerning engine and fuel injection equipment) 53
3.4 Troubleshooting by measuring Compression Pressure 56
4. Disassembly and Reassembly 58
4.1 Disassembly and Reassembly Precautions 58
4.2 Disassembly and Reassembly Tools 59
4.2.1 General Handtools 59

PREVIEW - YOUFIXTHIS.COM

FOR SAFTY

1. SAFETY LABELS

- Most accidents are caused by negligence of basic safety rules and precautions. For accident prevention, it is important to avoid such causes before development to accidents.
  Please read this manual carefully before starting repair or maintenance to fully understand safety precautions and appropriate inspection and maintenance procedures.
  Attempting at a repair or maintenance job without sufficient knowledge may cause an unexpected accident.

Blurred on purpose. The manual you buy has this page in full quality.

PREVIEW - YOUFIXTHIS.COM

Download full manual at youfixthis.com

FOREWORD

This service manual has been complied for engineers engaged in sales, service, inspection and maintenance. Accordingly, descriptions of the construction and functions of the engine are emphasized in this manual, while items, which should already be common knowledge, are omitted.

One characteristic of a marine diesel engine is that its performance in a vessel is governed by the applicability of the vessel's hull construction and its steering system.

Engine installation, fitting out and propeller selection have a substantial effect on the performance of the engine and the vessel. Moreover, when the engine runs unevenly or when trouble occurs, it is essential to check a wide range of operating conditions - such as installation to the full and suitability of the ship's

PREVIEW - YOUFIXTHIS.COM

Blurred on purpose. The manual you buy has this page in full quality.

Download full manual at youfixthis.com

(3) Engine speed and compression pressure (for reference)

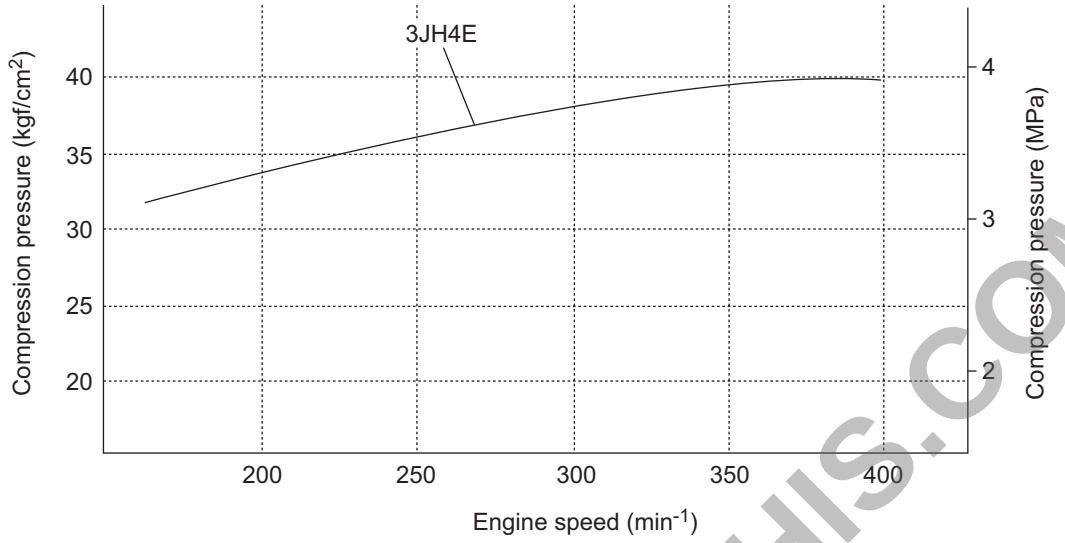

(4) Measured value and troubleshooting

When the measured compression pressure is below the limit value, inspect each part by referring to the table below.

No.	Item	Cause	Corrective action
1	• Air cleaner element	• Clogged element • Broken element • Defect at element seal portion	• Clean the element. • Replace the element.
2	• Valve clearance	• Excessive or no clearance	• Adjust the valve clearance. (See 3.5 in Chapter 3.)
3	• Valve timing	• Incorrect valve clearance	• Adjust the valve clearance. (See 3.5 in Chapter 3.)
4	• Cylinder head gasket	• Gas leak from gasket	• Replace the gasket. • Retighten the cylinder head bolts to the specified torque. (See 4.2(2)12) in Chapter 4.)
5	• Intake / exhaust vale • Valve seat	• Gas leak due to worn valve seat or foreign matter trapping • Sticking valve	• Lap the valve seat. (See 4.2(6) in Chapter 4.) • Replace the intake/exhaust valve.
6	• Piston • Piston ring • Cylinder	• Gas leak due to scratching or wear	• Perform honing and use an oversized part. (See 4.4(5)-(5-1), (5-4) and (6) in Chapter 4.)

PREVIEW - YOUFIXTHIS.COM

(2) Section of a fuel injection pump/ governor for 3JH4(B)(C)E

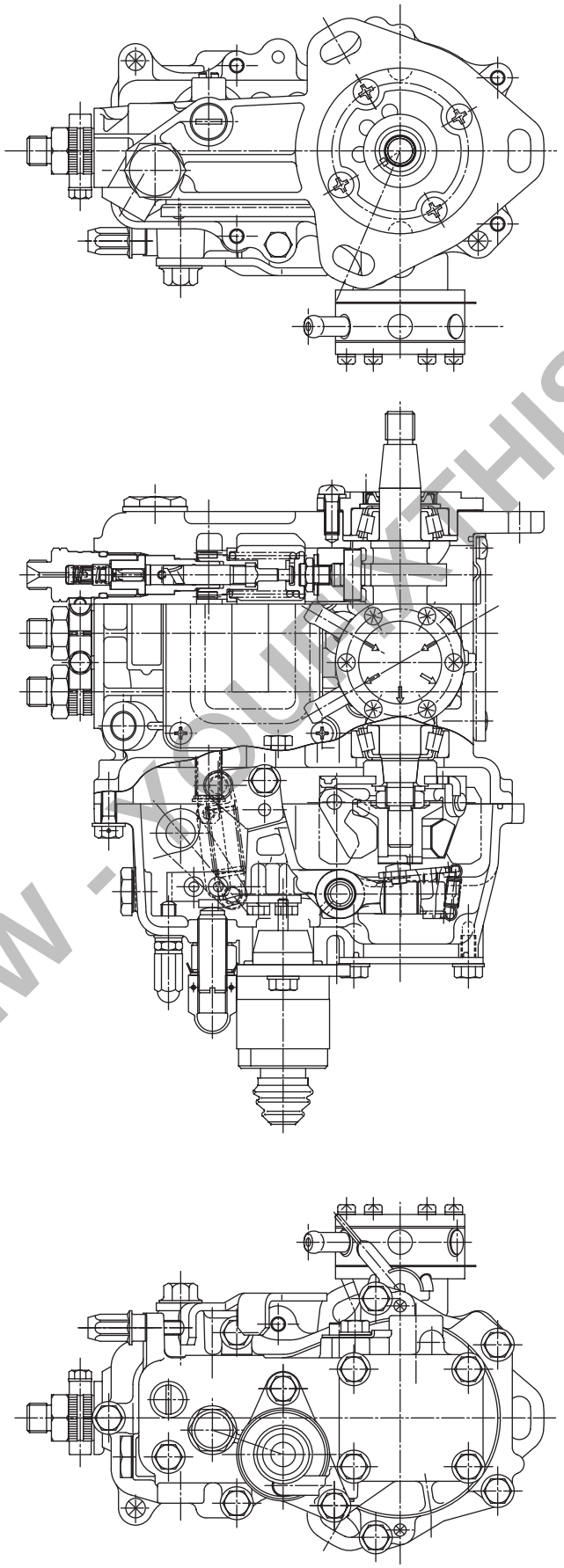

PREVIEW - YOUBUYTHIS.COM

PREVIEW ONLY

You're viewing 12 of 214 pages

The full manual includes:

- All 214 pages, complete
- Searchable PDF (find any keyword)
- No watermarks
- Instant download
- Print-ready quality

GET FULL MANUAL NOW

Yanmar 3JH4(B)(C)(M)E Service Manual

Scan or click anywhere
youfixthis.com

Click anywhere on this page to get the full manual