COMPONENT IDENTIFICATION

Figure 4-2 shows where the major engine components are located.

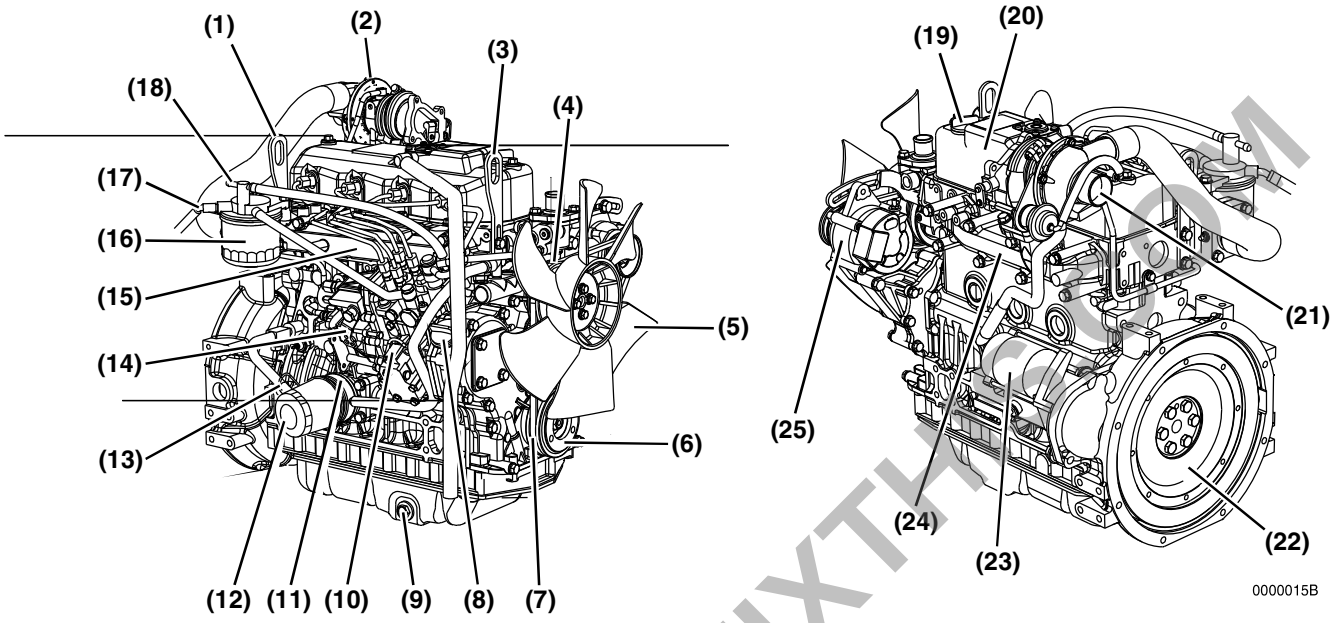

1 – Lifting Eye (Flywheel End)
2 – Turbocharger*
3 – Lifting Eye (Engine Cooling Fan End)
4 – Engine Coolant Pump
5 – Engine Cooling Fan
6 – Crankshaft V-Pulley
7 – V-Belt
8 – Side Filler Port (Engine Oil)
9 – Drain Plug (Engine Oil)**
10 – Fuel Injection Pump
11 – Engine Oil Cooler***
12 – Engine Oil Filter
13 – Dipstick (Engine Oil)
14 – Governor Lever
15 – Intake Manifold
16 – Fuel Filter
17 – Fuel Inlet
18 – Fuel Return to Fuel Tank
19 – Top Filler Port (Engine Oil)
20 – Rocker Arm Cover
21 – Air Intake Port (From Air Cleaner)
22 – Flywheel
23 – Starter Motor
24 – Exhaust Manifold
25 – Alternator

Figure 4-1

* Only applies to 3TNV84T, 4TNV84T, 4TNV98T, 4TNV106T
** The engine oil drain plug location may vary based on oil pan options.
*** Not standard on all direct injection models

PREVIEW - YOUFIXTHIS.COM

Download full manual at youfixthis.com

PRINCIPAL ENGINE SPECIFICATIONS

3TNV82A

Engine Model	3TNV82A	
Version	CL	VM
Type	Vertical In-line Diesel Engine	
Combustion System	Direct Injection	
Aspiration	Natural	
No. of Cylinders	3	
Bore × Stroke	3.228 x 3.307 in. (82 × 84 mm)	

PREVIEW - YOUFIXTHIS.COM

Blurred on purpose. The manual you buy has this page in full quality.

Download full manual at youfixthis.com

TIGHTENING TORQUES FOR STANDARD BOLTS AND NUTS

Use the correct amount of torque when you tighten the fasteners on the machine. Applying excessive torque may damage the fastener or component and not enough torque may cause a leak or component failure.

CAUTION

The tightening torque in the Standard Torque Chart *(see General Service Information section)* should be applied only to the bolts with a "7" head. (JIS strength classification: 7T)

- **Apply 60% torque to bolts that are not listed.**



PREVIEW - YOUFIXTHIS.COM

Blurred on purpose. The manual you buy has this page in full quality.

Download full manual at youfixthis.com

○:Check ◇:Replace ●: Contact your authorized Yanmar industrial engine dealer or distributor

System	Check Item	Daily	Periodic Maintenance Interval					
			Every 50 hours	Every 250 hours	Every 500 hours	Every 1000 hours	Every 1500 hours	Every 2000 hours
Cooling System	Check and Refill Engine Coolant	○						
	Check and Clean Radiator Fins			○				
	Check and Adjust Cooling Fan V-Belt		○ 1st time	○ 2nd and after				
	Drain, Flush and Refill Cooling System with New Coolant					◇ or every year whichever comes first		
Cylinder Head	Adjust Intake / Exhaust Valve Clearance					●		
	Lap Intake / Exhaust Valve Seats							●
Electrical Equipment	Check Indicators	○						
	Check Battery		○					
Engine Oil	Check Engine Oil Level	○						
	Drain and Fill Engine Oil		◇ 1st time	◇ 2nd and after				
	Replace Engine Oil Filter							
Engine Speed Control	Check and Adjust Governor Lever and Engine Speed Control	○		○				
Emission Control Warranty	Inspect, Clean and Test Fuel Injectors						●	
	Inspect Turbocharger (Blower wash as necessary) 3TNV84T, 4TNV84T, 4TNV98T, and 4TNV106T						●	
	Inspect Crankcase Breather System						●	
Fuel	Check and Refill Fuel Tank Level	○						
	Drain Fuel Tank			○				
	Drain Fuel Filter / Water Separator		○					
	Check Fuel Filter / Water Separator	○						
	Clean Fuel Filter / Water Separator				○			
	Replace Fuel Filter				◇			
Hoses	Replace Fuel System and Cooling System Hoses							● or every 2 years
Intake and Exhaust	Clean or Replace Air Cleaner Element			○	◇			
Complete Engine	Overall Visual Check Daily	○						

Note: These procedures are considered normal maintenance and are performed at the owner's expense.

PREVIEW - YOUFIXTHIS.COM

Download full manual at youfixthis.com

PERIODIC MAINTENANCE PROCEDURES

After Initial 50 Hours of Operation

Perform the following maintenance after the initial 50 hours of operation.

- **Replace Engine Oil and Engine Oil Filter**
- **Check and Adjust Cooling Fan V-Belt**

CAUTION

- **Only use the engine oil specified. Other engine oils may affect warranty coverage, cause internal engine components to seize and / or shorten engine life.**
- **Prevent dirt and debris from contaminating the engine oil. Carefully clean the oil cap / dipstick and the surrounding area before you remove the cap.**

Blurred on purpose. The manual you buy has this page in full quality.

PREVIEW - YOUFIXTHIS.COM

Download full manual at youfixthis.com

FUEL SYSTEM DIAGRAM

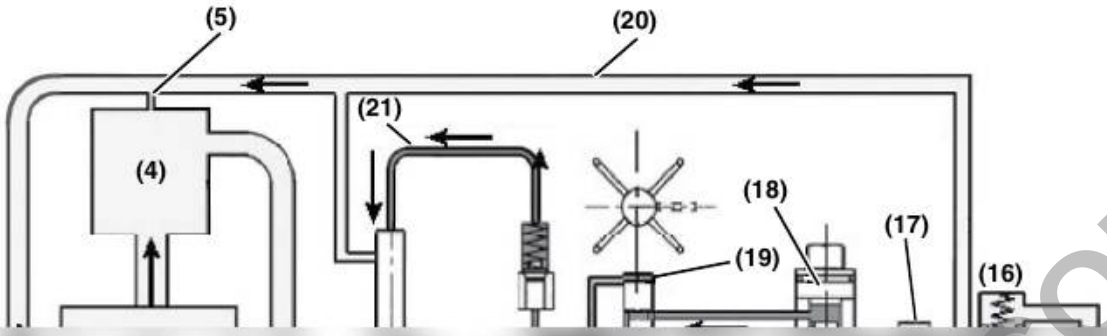

Blurred on purpose. The manual you buy has this page in full quality.

PREVIEW - YOUFIXTHIS.COM

Download full manual at youfixthis.com

ELECTRICAL WIRE SIZES - VOLTAGE DROP

Total current on circuit in amps	Length of conductor from source of current to device and back to source (in feet)																		
	10	15	20	25	30	40	50	60	70	80	90	100	110	120	130	140	150	160	170
12 Volts	Wire Size (AWG)																		
5	18	16	14	12	12	10	10	10	8	8	8	6	6	6	6	6	6	6	6
10	14	12	10	10	10	8	6	6	6	6	4	4	4	4	2	2	2	2	2
15	12	10	10	8	8	6	6	6	4	4	2	2	2	2	2	1	1	1	1
20	10	10	8	6	6	6	4	4	2	2	2	2	1	1	1	0	0	0	2/0
25	10	8	6	6	6	4	4	2	2	2	1	1	0	0	0	2/0	2/0	2/0	3/0
30	10	8	6	6	4	4	2	2	1	1	0	0	0	2/0	2/0	3/0	3/0	3/0	3/0
40	8	6	6	4	4	2	2	1	0	0	2/0	2/0	3/0	3/0	3/0	4/0	4/0	4/0	4/0
50	6	6	4	4	2	2	1	0	2/0	2/0	3/0	3/0	4/0	4/0	4/0				
60	6	4	4	2	2	1	0	2/0	3/0	3/0	4/0	4/0	4/0						
70	6	4	2	2	1	0	2/0	3/0	3/0	4/0	4/0								
80	6	4	2	2	1	0	3/0	3/0	4/0	4/0									
90	4	2	2	1	0	2/0	3/0	4/0	4/0										
100	4	2	2	1	0	2/0	3/0	4/0											
24 Volts																			
5	18	18	18	16	16	14	12	12	12	10	10	10	10	10	8	8	8	8	8
10	18	16	14	12	12	10	10	10	8	8	8	6	6	6	6	6	6	6	6
15	16	14	12	12	10	10	8	8	6	6	6	6	6	4	4	4	4	4	2
20	14	12	10	10	10	8	6	6	6	6	4	4	4	4	2	2	2	2	2
25	12	12	10	10	8	6	6	6	4	4	4	4	2	2	2	2	2	2	1
30	12	10	10	8	8	6	6	4	4	4	2	2	2	2	2	1	1	1	1
40	10	10	8	6	6	6	4	4	2	2	2	2	1	1	1	0	0	0	2/0
50	10	8	6	6	6	4	4	2	2	2	1	1	0	0	0	2/0	2/0	2/0	3/0
60	10	8	6	6	4	4	2	2	1	1	0	0	0	2/0	2/0	3/0	3/0	3/0	3/0
70	8	6	6	4	4	2	2	1	1	0	0	2/0	2/0	3/0	3/0	3/0	3/0	4/0	4/0
80	8	6	6	4	4	2	2	1	0	0	2/0	2/0	3/0	3/0	3/0	4/0	4/0	4/0	4/0
90	8	6	4	4	2	2	1	0	0	2/0	2/0	3/0	3/0	4/0	4/0	4/0	4/0	4/0	
100	6	6	4	4	2	2	1	0	2/0	2/0	3/0	3/0	4/0	4/0	4/0				

PREVIEW - YOUFIXTHIS.COM

Download full manual at youfixthis.com

Corrective Action	Reference Page
he Valve Clearance.	*See "Measuring and Adjusting Valve Clearance" on page 6-62.*
Valve Seat.	*See Valve Face and Valve Seat on page 6-40 for 2 valve head or Valve Face and Valve Seat on page 6-40 for 4 valve head.*
or Replace Intake / t Valve.	*See "Removal of Intake / Exhaust Valves" on page 6-36.*
e the Gasket.	*See "Removal of Cylinder Head" on page 6-50.*
e the Piston Ring.	*See "Reassembly of Pistons" on page 6-85.*
Honing and Use Oversize	*See "Honing and Boring" on page 6-84.*
or Replace.	*See "Inspection of Crankshaft" on page 6-82.*
the Ring Joint Positions.	*See "Reassembly of Pistons" on page 6-85.*

PREVIEW - YOUFIXTHIS.COM
Blurred on purpose. The manual you buy has this page in full quality.
Download full manual at youfixthis.com

TABLE OF CONTENTS

Introduction 1-1
Yanmar Warranties 2-1
Safety 3-1
General Service Information 4-1
Periodic Maintenance 5-1
Engine 6-1
Fuel System 7-1
Cooling System 8-1
Lubrication System 9-1
Turbocharger 10-1
Starter Motor 11-1
Alternator 12-1
Electric Wiring 13-1
Troubleshooting 14-1

PREVIEW - YOUFIXTHIS.COM

Download full manual at youfixthis.com

SAFETY STATEMENTS

Yanmar is concerned for your safety and your machine's condition. Safety statements are one of the primary ways to call your attention to the potential hazards associated with Yanmar TNV engine operation. Follow the precautions listed throughout the manual before operation, during operation and during periodic maintenance procedures for your safety, the safety of others and to protect the performance of your engine. Keep the labels from becoming dirty or torn and replace them if they are lost or damaged. Also, if you need

CAUTION

Caution (the word "CAUTION" is in black letters with a yellow rectangle behind it) – indicates a potentially hazardous situation which, if not avoided, may result in minor or moderate injury.

0000001en

CAUTION

Caution without the safety alert symbol

Blurred on purpose. The manual you buy has this page in full quality.

PREVIEW - YOUFIXTHIS.COM

Download full manual at youfixthis.com

This Page Intentionally Left Blank

PREVIEW - YOUFIXTHIS.COM

Download full manual at youfixthis.com

Notes:

- Be sure the engine oil, engine oil storage containers, and engine oil filling equipment are free of sediment and water.
- Change the engine oil after the first 50 hours of operation and then every 250 hours thereafter.
- Select the oil viscosity based on the ambient temperature where the engine is being operated. See the SAE Service Grade Viscosity Chart **(Figure 4-4)**.
- Yanmar does not recommend the use of engine oil “additives.”

Additional Technical Engine Oil Requirements:

The engine oil must be changed when the Total Base Number (TBN) has been reduced to 2.0. TBN (mgKOH/g) test method; JIS K-201-5.2-2 (HCl), ASTM D4739 (HCl).

Engine Oil Viscosity

Select the appropriate engine oil viscosity based on the ambient temperature and use the SAE Service Grade Viscosity Chart in **Figure 4-4**.

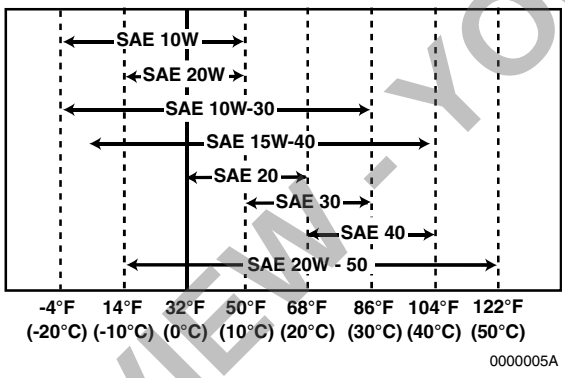

Figure 4-4

Checking Engine Oil

1. Make sure the engine is level.
2. Remove the dipstick **(Figure 4-5, (1))** and wipe it with clean cloth.
3. Fully reinsert the dipstick.
4. Remove the dipstick. The oil level should be between the upper **(Figure 4-5, (2))** and lower **(Figure 4-5, (3))** lines on the dipstick.
5. Fully reinsert the dipstick.

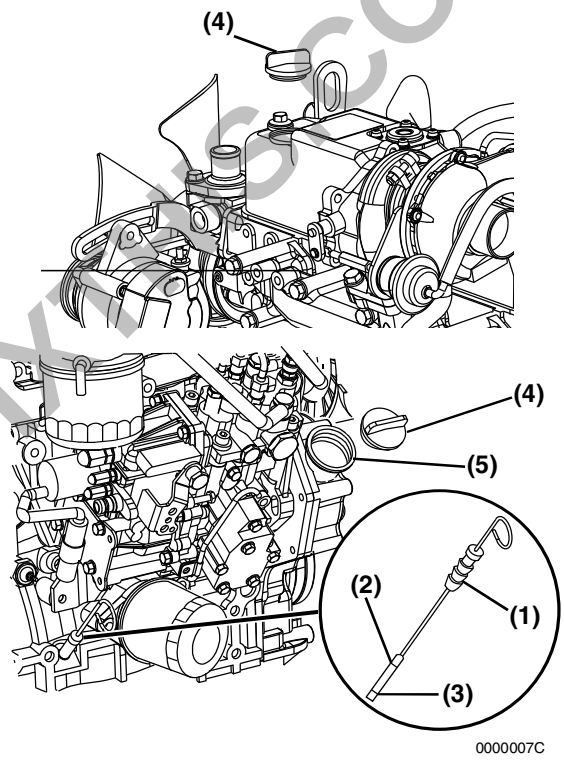

Figure 4-5

PREVIEW - YOUFIXTHIS.COM

Download full manual at youfixthis.com

⚠ WARNING



SHOCK HAZARD!

- Turn off the battery switch (if equipped) or disconnect the negative battery cable before servicing the electrical system.
- Check the electrical harnesses for cracks, abrasions, and damaged or corroded connectors. ALWAYS keep the connectors and terminals clean.
- Failure to comply could result in death or serious injury.

0000009en

⚠ WARNING



ENTANGLEMENT HAZARD!

- Stop the engine before you begin to service it.
- NEVER leave the key in the key switch when you are servicing the engine. Someone may accidentally start the engine and not realize you are servicing it. This could result in a serious injury.
- If you must service the engine while it is operating, remove all jewelry, tie back long hair, and keep your hands, other body parts and clothing away from moving / rotating parts.
- Failure to comply could result in death or serious injury.

0000010en

WARNING



BURN HAZARD!

- If you must drain the engine oil while it is still hot, stay clear of the hot engine oil to avoid being burned.
- ALWAYS wear eye protection.
- Failure to comply could result in death or serious injury.

0000011en

WARNING



BURN HAZARD!

- Wait until the engine cools before you drain the engine coolant. Hot engine coolant may splash and burn you.
- Failure to comply could result in death or serious injury.

0000016en

PREVIEW - YOUFIXTHIS.COM

Download full manual at youfixthis.com

(Piston Cont.)

Inspection Item			Standard	Limit	Reference Page
	3TNV82A	Hole Inside Diameter	0.9055 - 0.9059 in. (23.000 - 23.009 mm)	0.9070 in. (23.039 mm)	
		Pin Outside Diameter	0.9053 - 0.9055 in. (22.995 - 23.000 mm)	0.9041 in. (22.965 mm)	
		Oil Clearance	0.0000 - 0.0006 in. (0.000 - 0.014 mm)	0.0029 in. (0.074 mm)	
	3TNV84, 3TNV84T,	Hole Inside Diameter	1.0236 - 1.0240 in. (26.000 - 26.009 mm)	1.0252 in. (26.039 mm)	

Blurred on purpose. The manual you buy has this page in full quality.

PREVIEW - YOUFIXTHIS.COM

Download full manual at youfixthis.com

Reassembly of the Valve Cover

1. Lightly grease a new valve cover gasket **(Figure 6-73, (6))**. Place the gasket in the groove of the valve cover **(Figure 6-73, (3))**.
2. Place the valve cover on the cylinder head.
3. Be sure new O-rings **(Figure 6-73, (5))** are installed on the valve cover nuts. Reinstall and tighten the valve cover nuts **(Figure 6-73, (4))**.



9. Reinstall the high pressure and fuel return lines. *See Installation of the Fuel Injectors on page 7-37.*
10. Reinstall the coolant pump. *Reassembly of Engine Coolant Pump.*
11. Reinstall the alternator. *See Installation of Alternator on page 12-16.*
12. Reconnect the turbocharger oil supply and drain lines.
13. Reconnect the air intake hose.

PREVIEW - YOUFIXTHIS.COM

Blurred on purpose. The manual you buy has this page in full quality.

Download full manual at youfixthis.com

FUEL SYSTEM COMPONENTS

2-Valve Cylinder Head

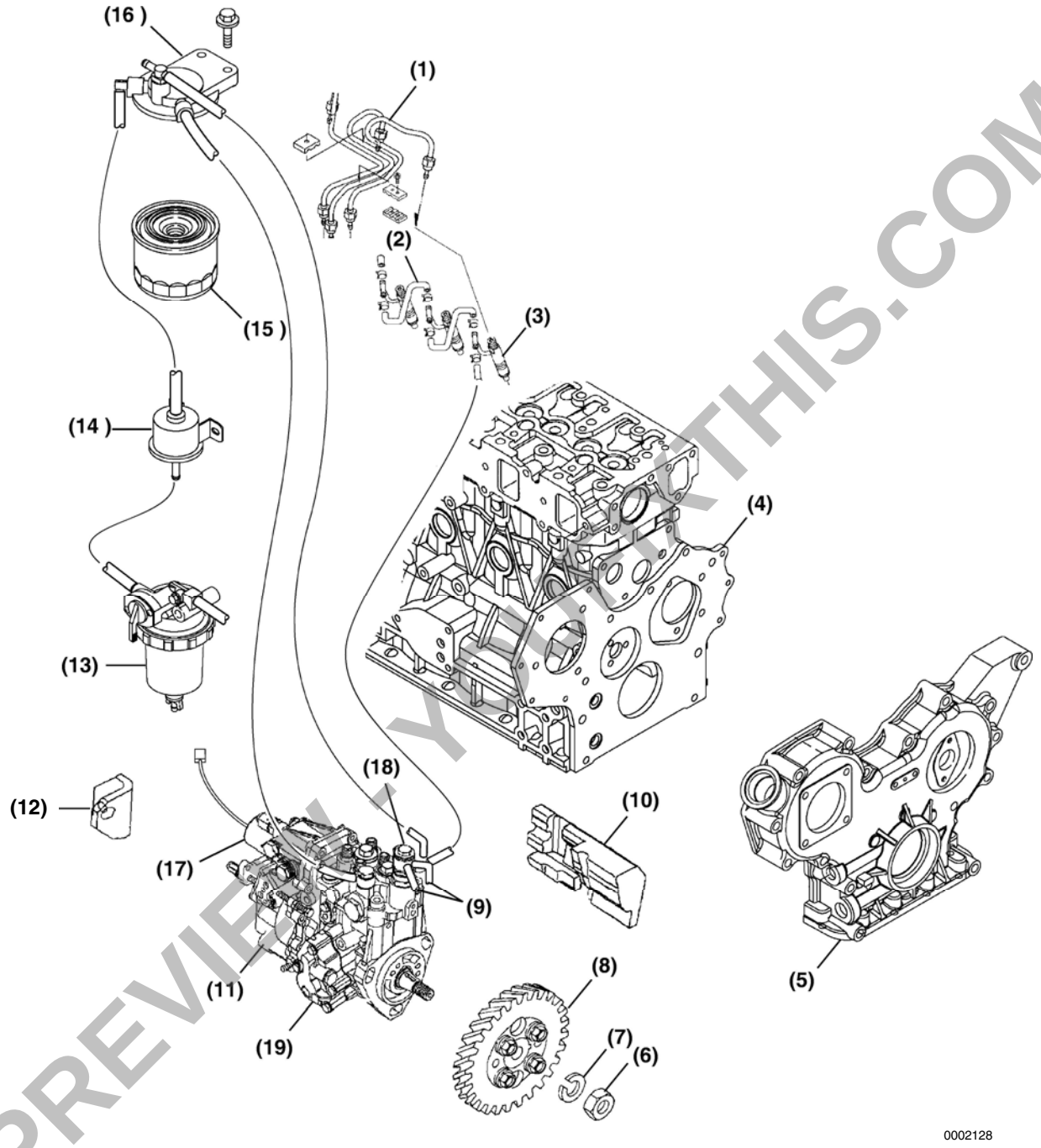

Figure 7-3

PREVIEW ONLY - YOUFIXTHIS.COM

Download full manual at youfixthis.com

LUBRICATION SYSTEM DIAGRAM

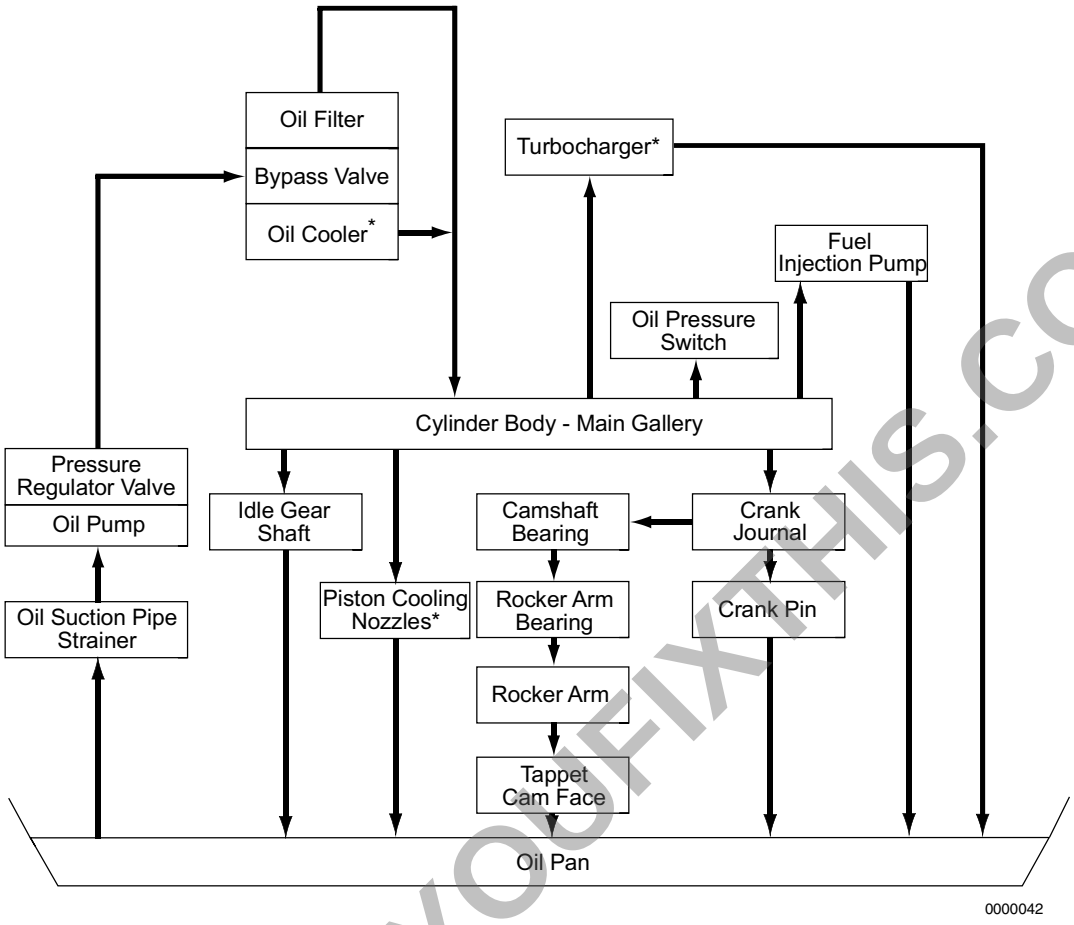

Figure 9-1

Note: Items marked * are not standard equipment on all models.

PREVIEW - YOUFIXTHIS.COM

Download full manual at youfixthis.com

Section 12

ALTERNATOR

	Page
Before You Begin Servicing	12-3
Introduction	12-6
Dynamo and Alternator Information	12-6
3TNV82A to 4TNV106T - Standard and Optional Dynamos	12-6
3TNV82A to 4TNV106T - Standard and Optional Alternators	12-6
Alternator Specifications	12-7
Dynamo Specifications	12-7
Alternator Troubleshooting	12-8
Alternator Components	12-9
Alternator Wiring Diagram	12-10
Alternator Standard Output	12-11
Alternator	12-12
Removal of Alternator	12-12
Disassembly of Alternator	12-12
Reassembly of Alternator	12-14
Installation of Alternator	12-16
Dynamo Component Location	12-17
Dynamo Wiring Diagram	12-18
Operation of Dynamo	12-18
Dynamo Standard Output	12-19
Testing of Dynamo	12-20
Testing Stator Coil Continuity	12-20
Testing Stator Coil Short-to-Ground	12-20
Testing Dynamo Regulated Output	12-20

PREVIEW - YOUFIXTHIS.COM

Download full manual at youfixthis.com

PREVIEW ONLY

You're viewing 18 of 370 pages

The full manual includes:

- All 370 pages, complete
- Searchable PDF (find any keyword)
- No watermarks
- Instant download
- Print-ready quality

GET FULL MANUAL NOW

Yanmar 3TNV82A, 3TNV84, 3TNV84T, 3TNV88, 4TNV84, 4TNV84T, 4TNV88, 4TNV94L, 4TNV98, 4TNV98T, 4TNV106, 4TNV106T, TNV series Service Manual



Scan or click anywhere
youfixthis.com

Click anywhere on this page to get the full manual