COMPONENT IDENTIFICATION

Figure 1, **Figure 2** and **Figure 3** illustrate a typical version of a 4BY2 engine. Your engine may have different equipment from that illustrated.

Left Side (as viewed from flywheel) - 4BY2

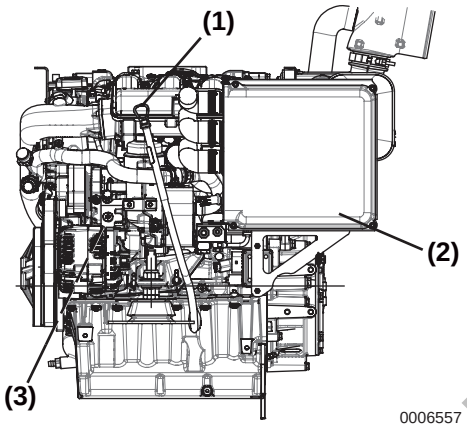

Figure 1

1 – Engine Oil Dipstick
2 – E-Box Panel
3 – High Pressure Fuel Pump

Right Side (as viewed from flywheel) - 4BY2

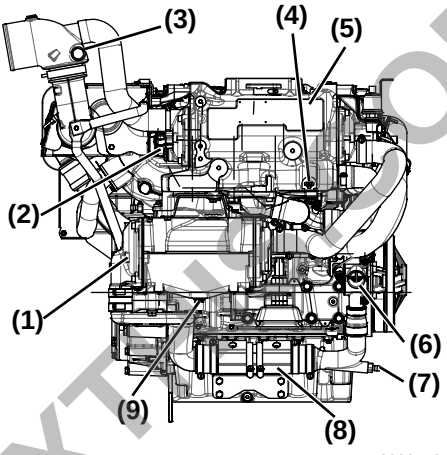

Figure 2

1 – Zinc Anode
2 – Zinc Anode
3 – Exhaust / Water Mixing Elbow
4 – Coolant Drain Cock
5 – Heat Exchanger
6 – Seawater Pump
7 – Seawater Drain Cock
8 – Hydraulic Oil Cooler
9 – Coolant Drain Plug

PREVIEW - YOUFIXTHIS.COM

Download full manual at youfixthis.com
© 2008 Yanmar Marine International

SAFETY DECALS

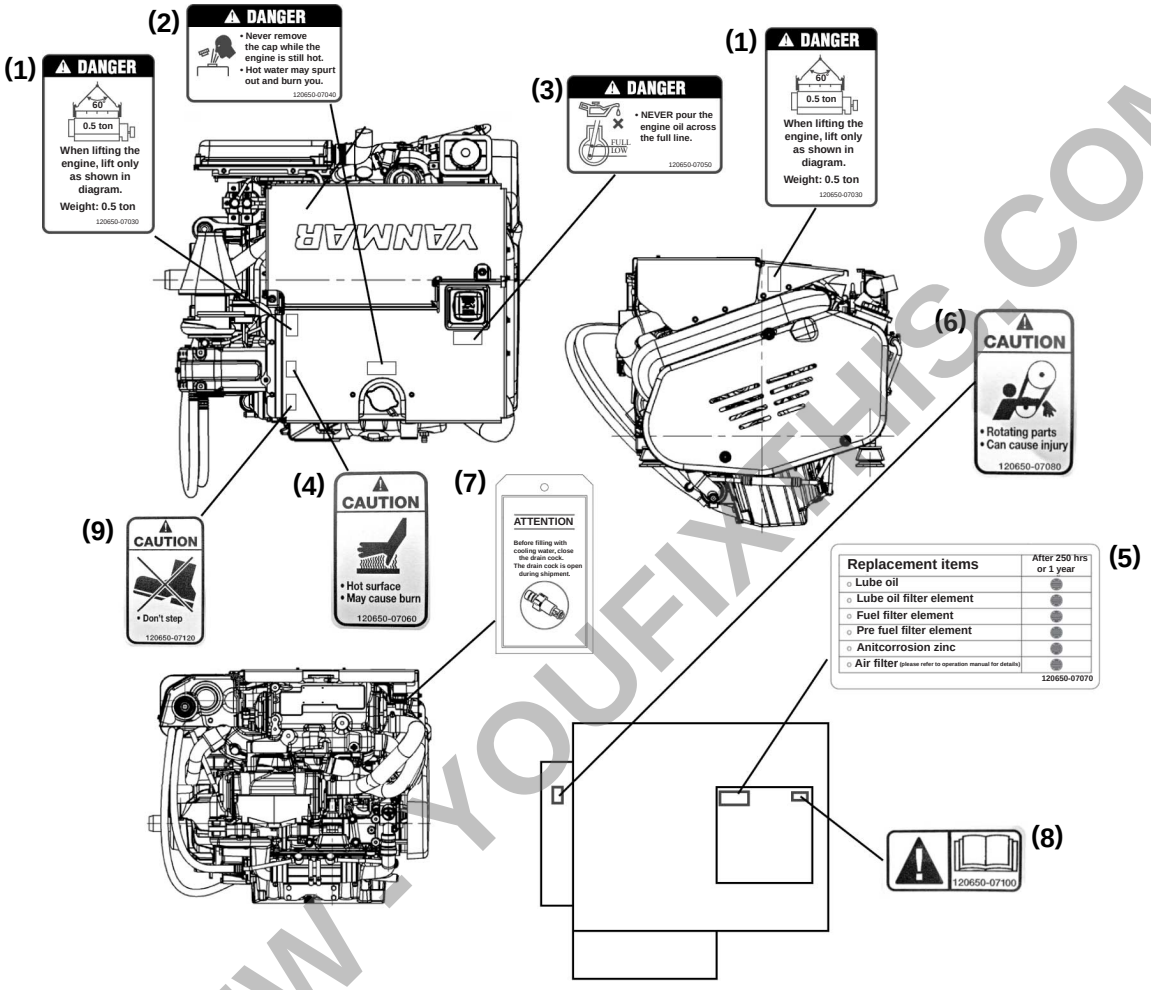

Figure 1

1 – 120650-07030
2 – 120650-07040
3 – 120650-07050
4 – 120650-07060
5 – 120650-07070
6 – 120650-07080
7 – 120650-07090
8 – 120650-07100
9 – 120650-07121

PREVIEW YOUFIXTHIS.COM

Download full manual at youfixthis.com
© 2008 Yanmar Marine International

Standard Torque Values

Hexagon Bolts and Nuts

Nominal Diameter	Grade (Lubricated)		
	8.8 or 8	10.9 or 10	12.9 or 12
M4	2.7 N·m (24 in.-lb)	3.88 N·m (34.3 in.-lb)	4.6 N·m (41 in.-lb)
M5	5.5 N·m (48.6 in.-lb)	8 N·m (71 in.-lb)	9.5 N·m (84 in.-lb)
M6	9.5 N·m (84 in.-lb)	13 N·m (115 in.-lb)	16 N·m (142 in.-lb)
M7	15 N·m (133 in.-lb)	22 N·m (195 in.-lb)	26 N·m (230 in.-lb)
M8	23 N·m (204 in.-lb)	32 N·m (24 ft-lb)	39 N·m (29 ft-lb)

Blurred on purpose. The manual you buy has this page in full quality.

PREVIEW - YOUFIXTHIS.COM

Download full manual at youfixthis.com

Diagnostic Trouble Code Table

Code	Part or System	Mode	Run Or Condition	Engine Can Start	Check Engine Alarm
No Code	Coolant Temp	Under 0°C (32°F)	1000 rpm	yes	no
No Code	Coolant Temp	Over 108°C (226°F)	reduce	yes	no
No Code	Coolant Temp	Over 110°C (230°F)	reduce	yes	alarm
No Code	Charge Air Temp	Over 110°C (230°F)	reduce	yes	no
No Code	Boost Pressure Reading	4BY2 - over 1.9 bar (27.5 psi) (relative*) or 2.9 bar (42.0 psi) (absolute**) 6BY2 - over 2.3 bar (33.3 psi) (relative*) or 3.3 bar (42.9 psi) (absolute**)	reduce	yes	alarm
No Code	Fuel Temperature	Over 90°C (194°F)	reduce	yes	no
No Code	Neutral Switch	Only in case of analog throttle or in case of CAN-fault (U0001), wrong configuration - neutral position	no	no	alarm
P0001	Fuel Metering Unit	Not connected	reduce	yes	alarm
P0003	Fuel Metering Unit	Short circuit to Ground	no	no	alarm
P0004	Fuel Metering Unit	Short circuit to B+	reduce	yes	alarm
P0087	Rail Pressure Governor Deviation	Fuel rail pressure out of range	reduce or shut off	depends on fault	alarm
P0088	Rail Pressure Governor Deviation	Fuel rail pressure out of range	reduce or shut off	depends on fault	alarm
P0089	Rail Pressure Governor Deviation	Fuel rail pressure out of range	yes	yes	alarm
P0090	Fuel Pressure Control Valve	Not connected	no	no	alarm
	Rail Pressure Governor Deviation	Fuel rail pressure out of range	reduce	yes	alarm
P0091	Fuel Pressure Control Valve	Short circuit to Ground	reduce	yes	alarm
P0092	Fuel Pressure Control Valve	Short circuit to B+	no	no	alarm
P0112	Charge Air Temp	Over 125°C (257°F)	reduce	yes	alarm
	Charge Air Temp Sensor	Short circuit to B+	reduce	yes	alarm
P0113	Charge Air Temp	Under -20°C (-4°F)	reduce	yes	alarm
	Charge Air Temp Sensor	No connection / short circuit to Ground	reduce	yes	alarm
P0117	Coolant Temp Sensor	Short circuit to B+	reduce	yes	alarm
P0118	Coolant Temp Sensor	No connection / short circuit to Ground	reduce	yes	alarm

PREVIEW - YOUFIXTHIS.COM

Download full manual at youfixthis.com
© 2008 Yanmar Marine International

TROUBLESHOOTING CHART

Starting Trouble

Problem / Symptom	Cause	Action
Engine Will Not Crank	Discharged battery	Charge / replace battery
	Blown fuse	Replace fuse
	Defective starter motor	See your authorized Yanmar dealer or distributor
	Loose wiring connections	Tighten connections
	Electrical panel power circuit breaker is tripped	Reset circuit breaker
Engine Cranks but Will Not Start	No fuel to engine	Check fuel level in tank
		See your authorized Yanmar dealer or distributor
	No fuel to cylinders	Check fuel filter / water separator
		Clean or replace clogged fuel fine filter
		Bleed air from fuel system
		Replace blown fuse (F3)
		See your authorized Yanmar dealer or distributor
	Low ambient temperature	See your authorized Yanmar dealer or distributor
	Oil high	Replace with correct viscosity oil for operating conditions

PREVIEW - YOUFIXTHIS.COM

Download full manual at youfixthis.com
© 2008 Yanmar Marine International

SPECIFICATIONS

Blurred on purpose. The manual you buy has this page in full quality.

PREVIEW - YOUFIXTHIS.COM

Download full manual at youfixthis.com

○: Check or Clean ◇: Replace ●: Contact your authorized Yanmar marine dealer or distributor

System	Item	Periodic Maintenance Interval					
		Daily *See Daily Checks on page 46*	Every 50 hours or monthly whichever comes first	Every 250 hours or one year whichever comes first	Every 500 hours or 2 years whichever comes first	Every 1000 hours or 4 years whichever comes first	Every 2000 hours or 8 years whichever comes first
Whole	Visual inspection of en-	○ Before					

Blurred on purpose. The manual you buy has this page in full quality.

PREVIEW - YOUFIXTHIS.COM

Download full manual at youfixthis.com

Filling the Fuel Tank

NOTICE: *Operate bilge ventilation (blowers) for a minimum of 5 minutes to purge fumes from engine compartment after refueling. Never operate bilge blower while refueling. Doing so can pump explosive fumes into the engine compartment and result in an explosion.*

To Fill the Fuel Tank:

NOTICE: *Only fill the fuel tank with diesel fuel. Filling the fuel tank with gasoline may result in a fire and will damage the engine.*

1. Clean the area around the fuel cap.
2. Remove the fuel cap from the fuel tank filler port.
3. NOTICE: *Hold the hose nozzle firmly against the filler port while filling. This prevents static electricity buildup which could cause sparks and ignite fuel vapors.* Stop fueling when the gauge shows the fuel tank is full. NOTICE: *NEVER overfill the fuel tank.*
4. Replace the fuel cap and hand-tighten. Over-tightening the fuel cap will damage it.

Bleeding the Fuel System

The fuel system needs to be bled under the following conditions:

- Before starting the engine for the first time.
- After running out of fuel and fuel has been added to the fuel tank.
- After fuel system maintenance, such as changing the fuel filter and draining the fuel filter / water separator, or replacing a fuel system component.

The fuel feed pump is ECU-controlled and will operate for only 10 seconds when the key switch is turned ON while the engine is not running or being started. For this reason, the key switch must be repeatedly turned ON then OFF to sufficiently bleed the fuel system.

1. Turn the key switch on and leave on for 10 seconds. NOTICE: *NEVER hold the key in the START position for longer than 10 seconds or the starter motor will overheat.*
2. Turn key switch OFF for 5 seconds, then turn key switch ON for 10 seconds.
3. Repeat steps 1 and 2 five more times.

Note: The engine may run rough and misfire for a few seconds when first started until any remaining air is purged from the fuel system.

4. Attempt to start the engine. If the engine does not start within a reasonable time, repeat steps 1 and 2 until the engine starts and runs. NOTICE: *NEVER use an engine starting aid such as ether. Engine damage will result.*

PREVIEW - YOUFIXTHIS.COM

Download full manual at youfixthis.com
© 2008 Yanmar Marine International

PREVIEW ONLY

You're viewing 8 of 88 pages

The full manual includes:

- All 88 pages, complete
- Searchable PDF (find any keyword)
- No watermarks
- Instant download
- Print-ready quality

GET FULL MANUAL NOW

Yanmar 4BY2, 6BY2 Operator Manual

Scan or click anywhere
youfixthis.com

Click anywhere on this page to get the full manual