```
0,Y00B6190
1,001,,"ENGINE 4TNE84T-BS"
2,1,,"CYLINDER BLOCK",4TNE84T-BS,,,
2,2,,"GEAR HOUSING",4TNE84T-BS,,,
2,3,,"FLYWHEEL HOUSING&LUB.OIL SUMP",4TNE84T-BS,,,
2,4,,"CYLINDER HEAD & BONNET",4TNE84T-BS,,,
2,5,,"SUC.MANIFOLD & AIR CLEANER",4TNE84T-BS,,,
2,6,,"EXHAUST MANIFOLD & SILENCER",4TNE84T-BS,,,
2,7,,"CAMSHAFT & DRIVING GEAR",4TNE84T-BS,,,
2,8,,TURBOCHARGER,4TNE84T-BS,,,
2,9,,"CRANKSHAFT & PISTON",4TNE84T-BS,,,
2,10,,"LUB. OIL SYSTEM",4TNE84T-BS,,,
2,11,,"LUB. OIL PIPE",4TNE84T-BS,,,
2,12,,"COOLING WATER SYSTEM",4TNE84T-BS,,,
2,13,,"FUEL INJECTION PUMP",4TNE84T-BS,,,
2,14,,"FUEL INJECTION PIPE",4TNE84T-BS,,,
2,15,,"FUEL PIPE",4TNE84T-BS,,,
2,16,,GOVERNOR,4TNE84T-BS,,,
2,17,,"STARTING MOTOR",4TNE84T-BS,,,
2,18,,GENERATOR,4TNE84T-BS,,,
2,19,,TOOL,4TNE84T-BS,,,
```

PREVIEW - YOUFIXTHIS.COM

Download full manual at youfixthis.com

Fig. 1 CYLINDER BLOCK

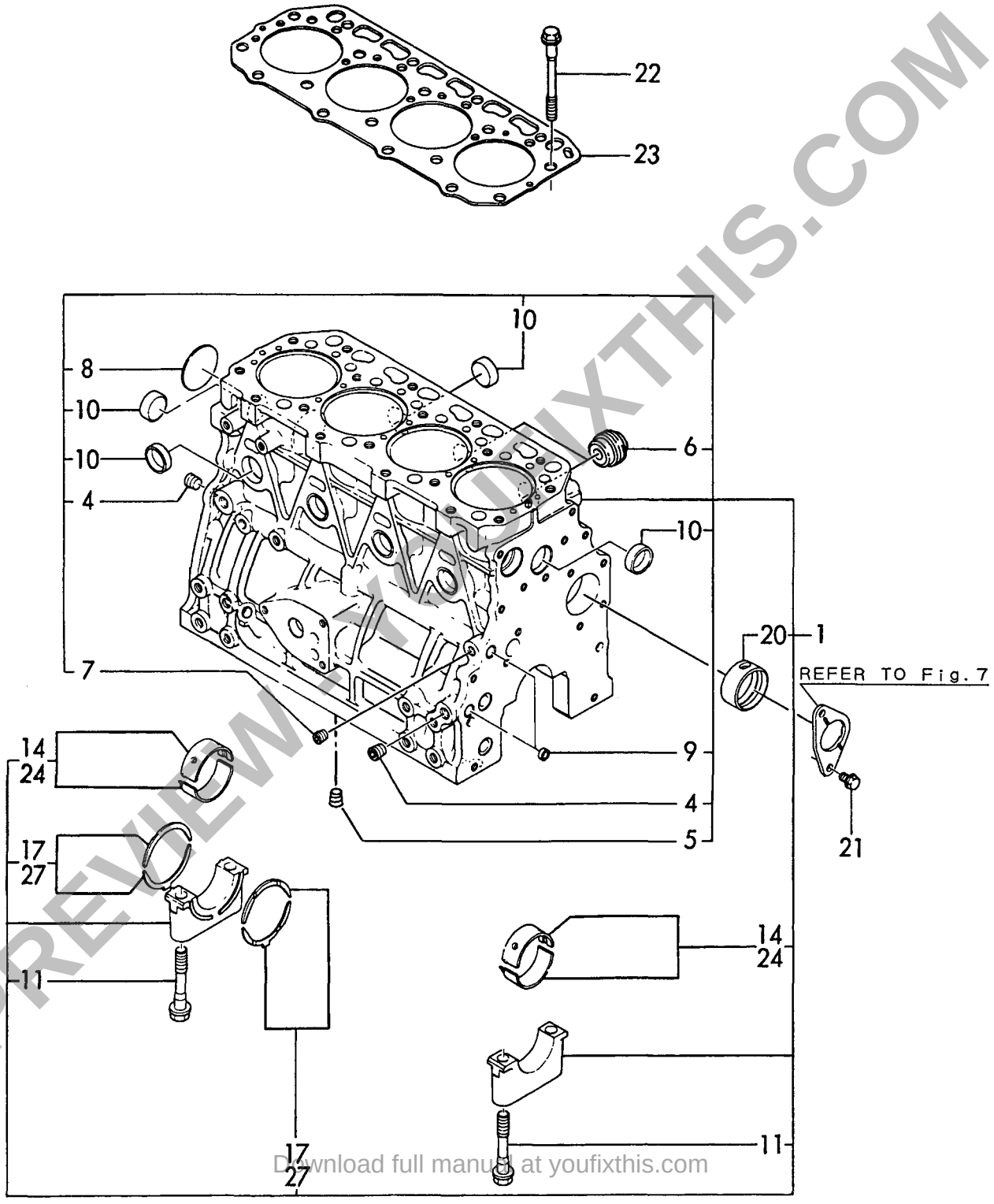

PREVIEW FROM YOUFIXTHIS.COM

Download full manual at youfixthis.com

Fig. 9 CRANKSHAFT & PISTON

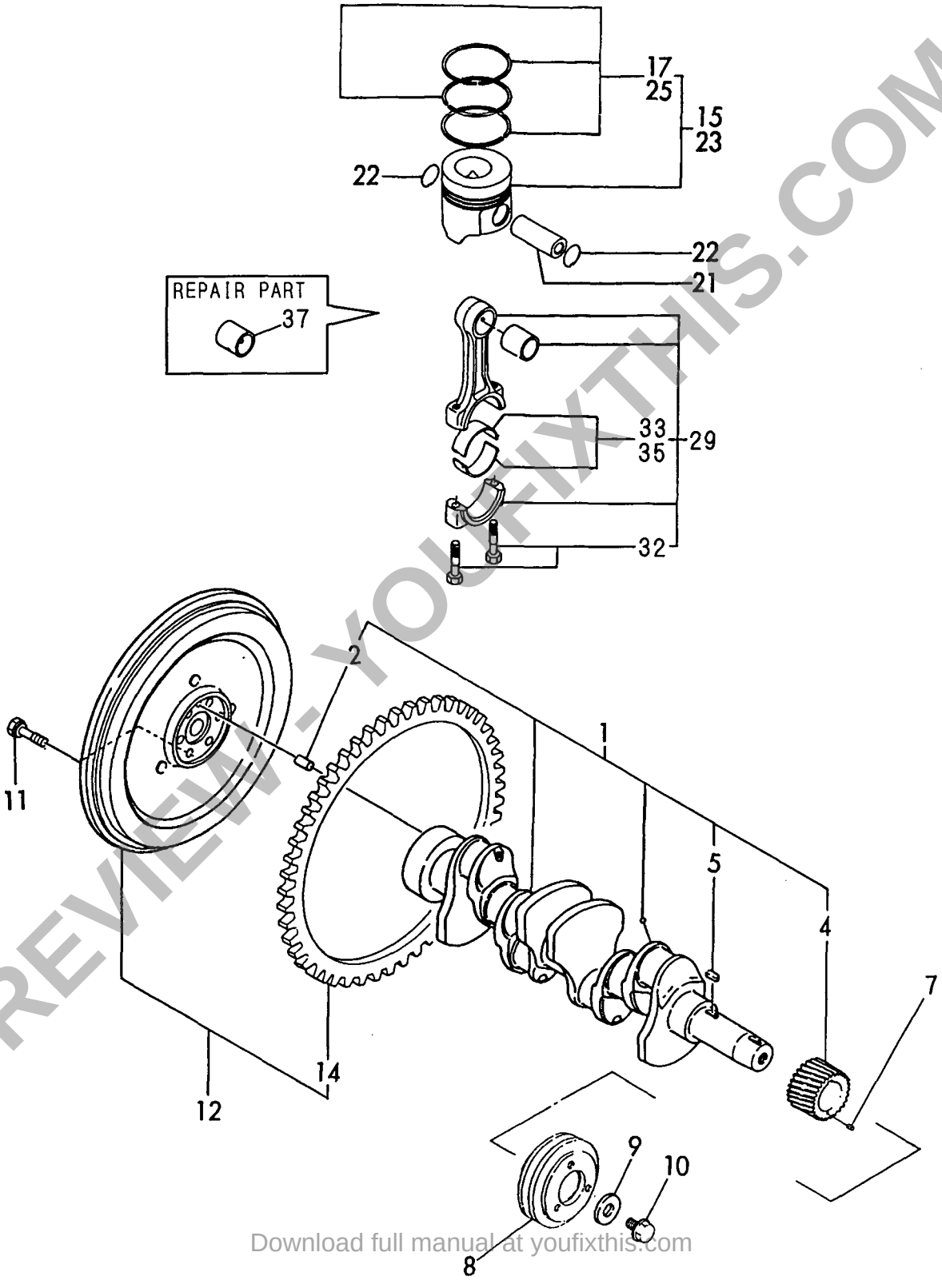

REVIEW - YOUFIXTHIS.COM

Download full manual at youfixthis.com

Fig. 8 TURBOCHARGER

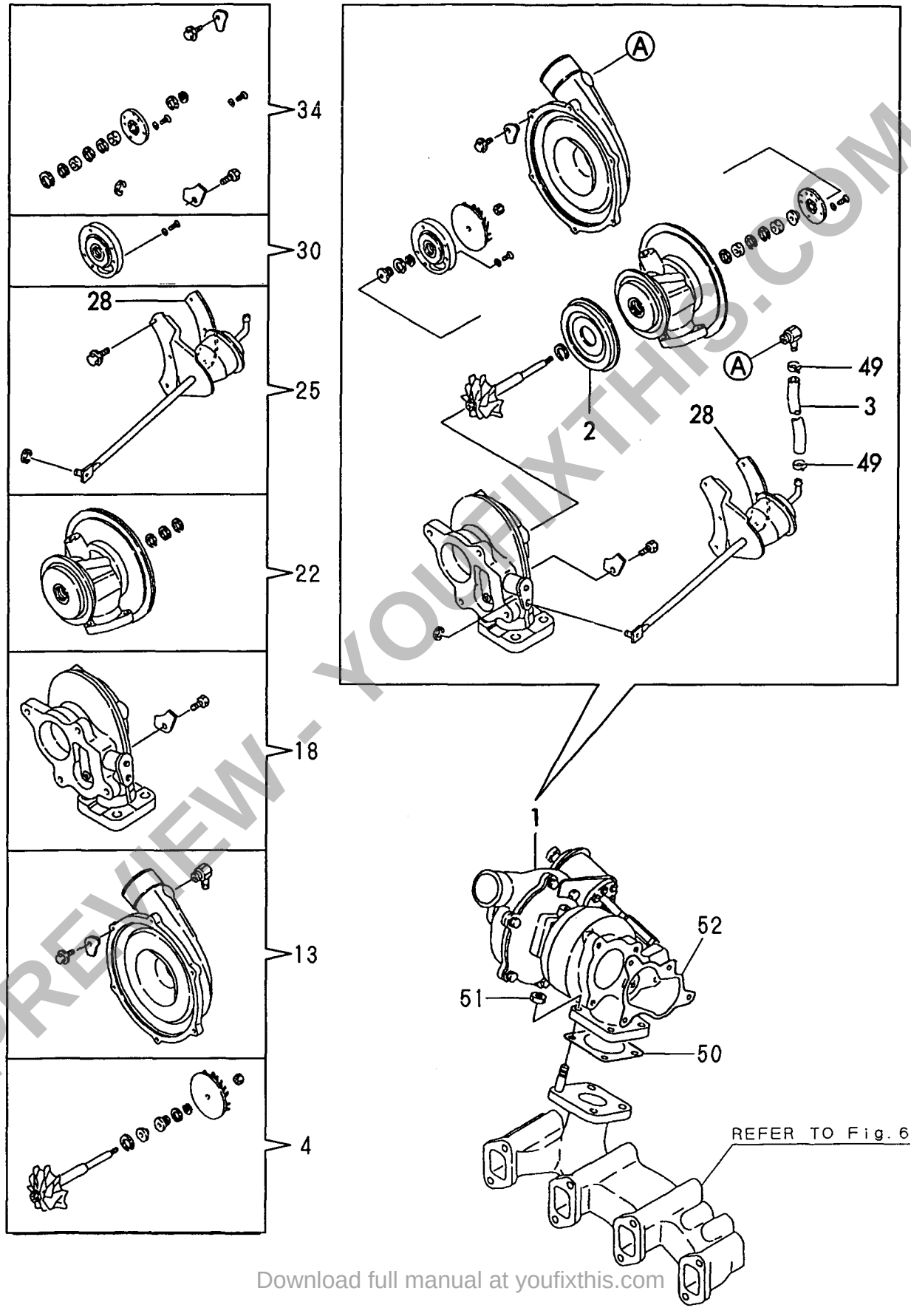

PREVIEW - YOUFIXTHIS.COM

Download full manual at youfixthis.com

Fig. 13 FUEL INJECTION PUMP

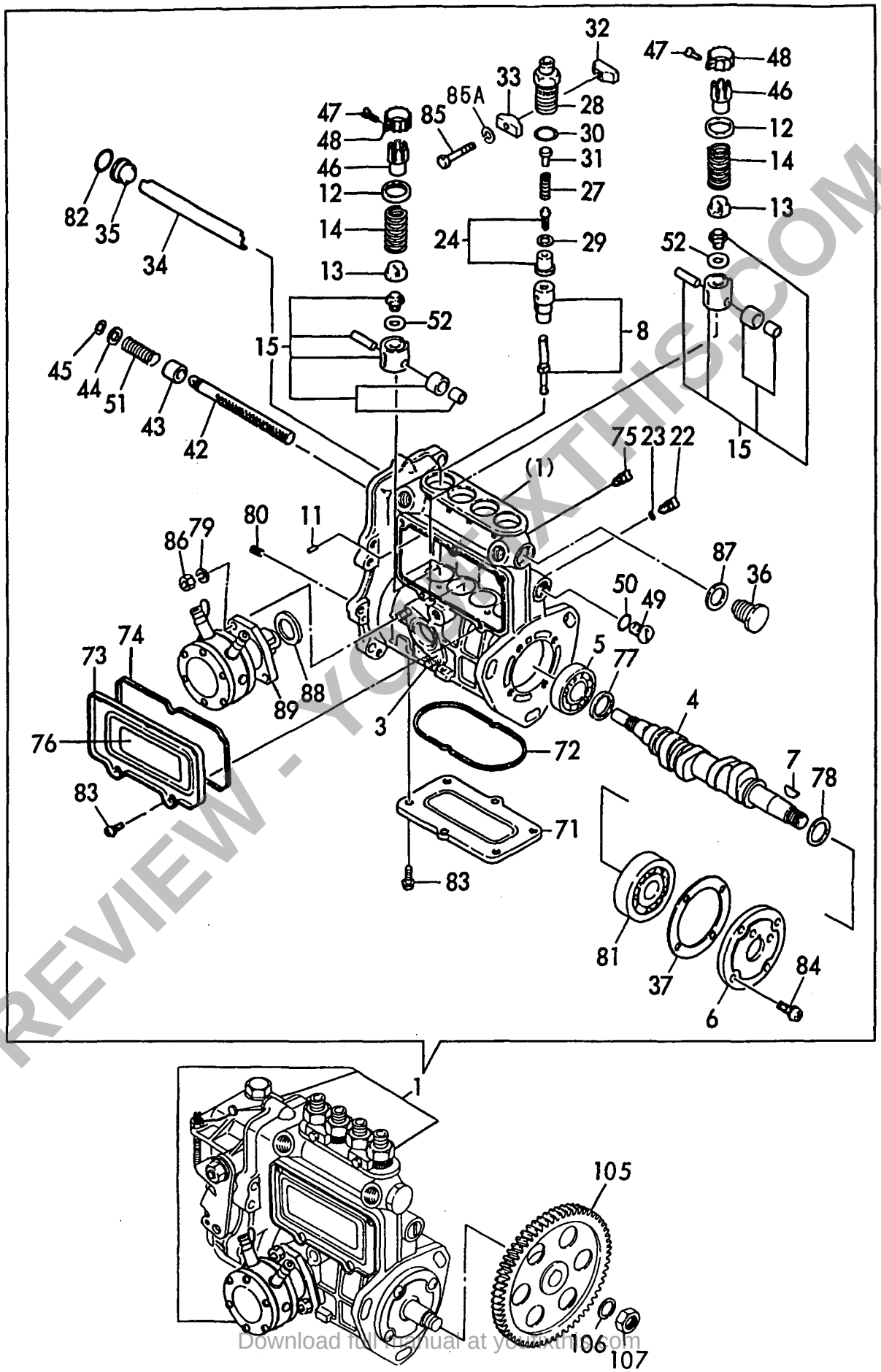

PREVIEW - YOUFIXTHIS.COM
Download full manual at youfixthis.com

Fig. 10 LUB. OIL SYSTEM

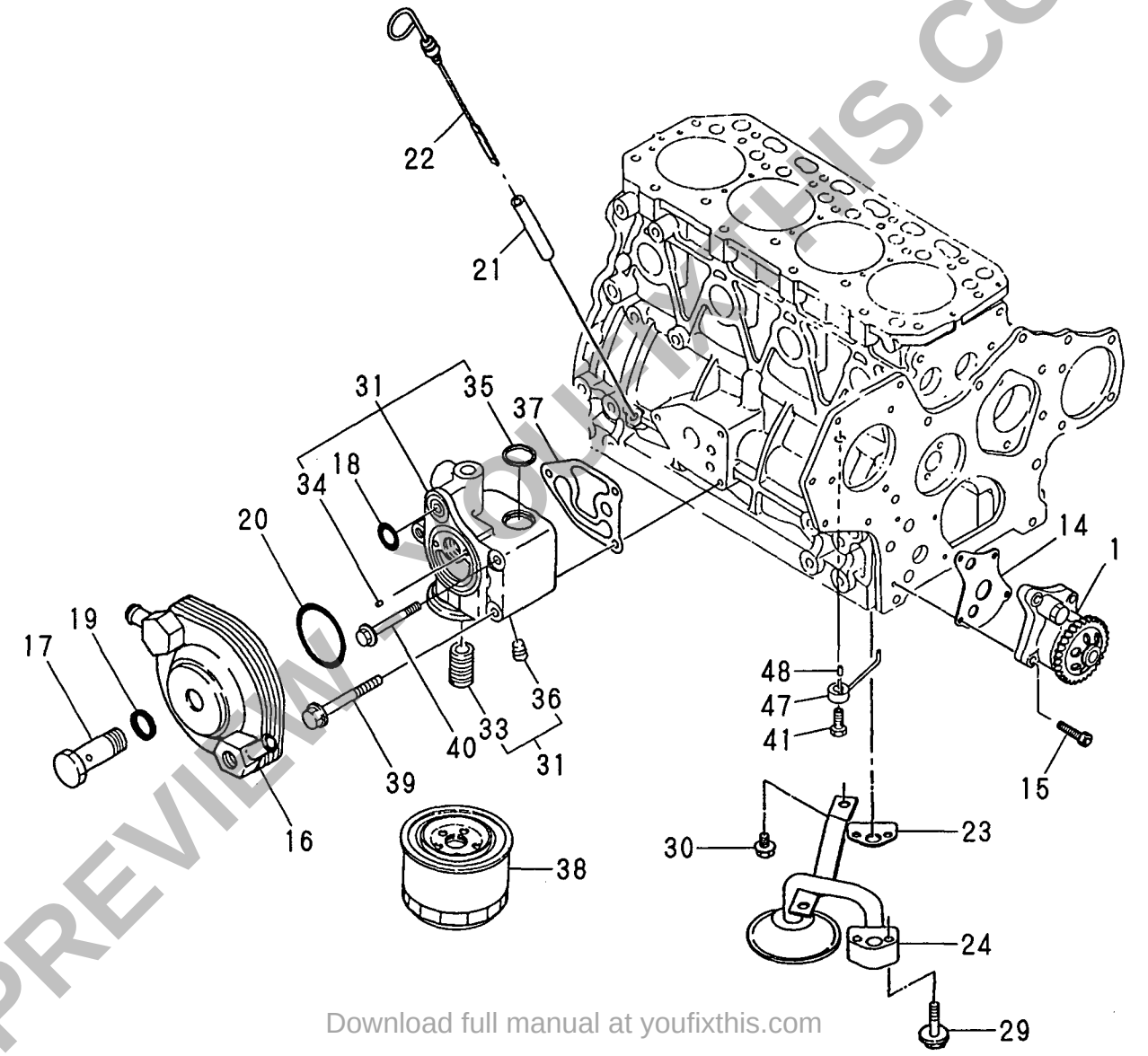

PREVIEW YOUFIXTHIS.COM

Download full manual at youfixthis.com

Fig. 12 COOLING WATER SYSTEM

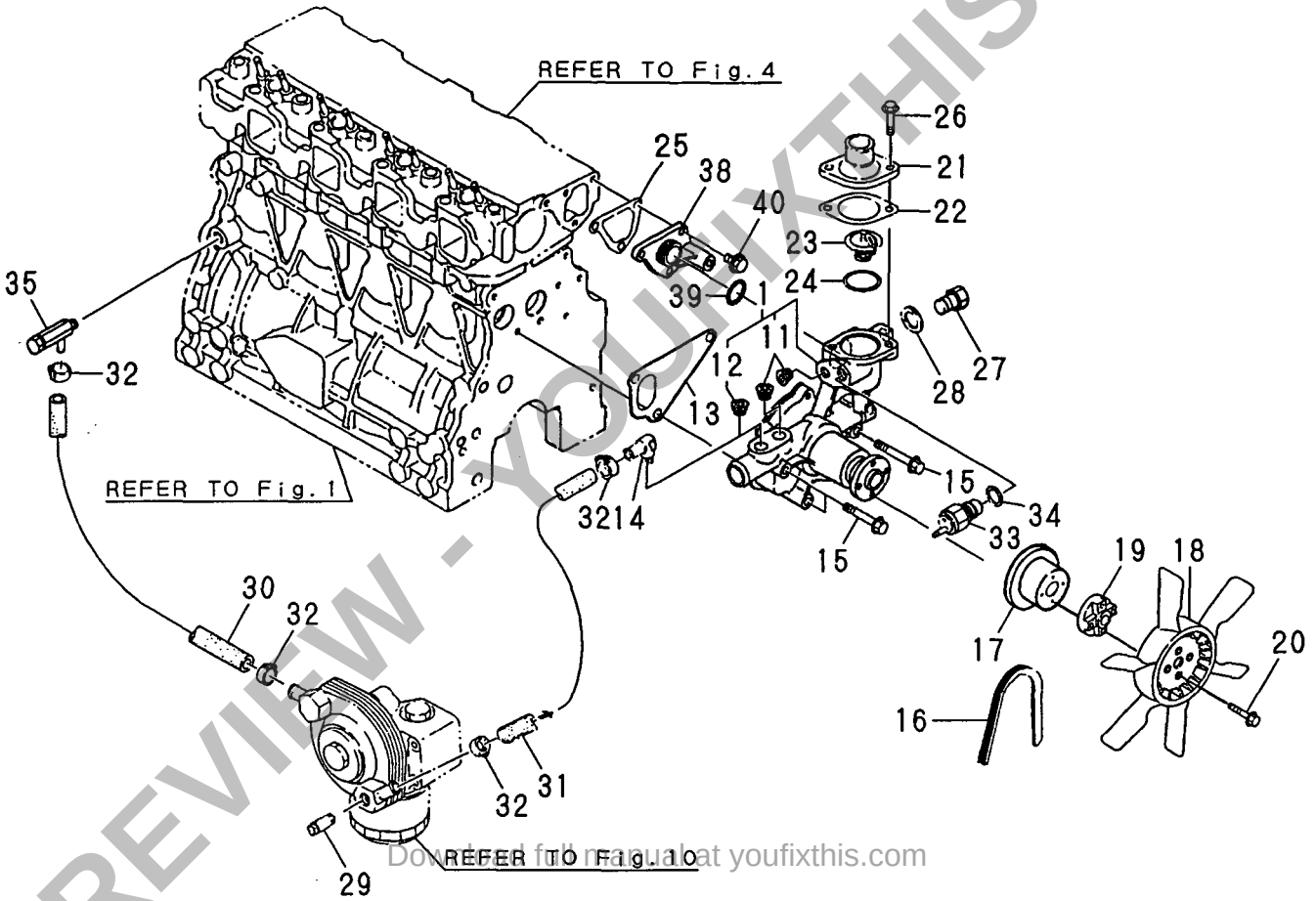

PREVIEW - YOUFIXTHIS.COM
Download full manual at youfixthis.com

Fig. 17 STARTING MOTOR

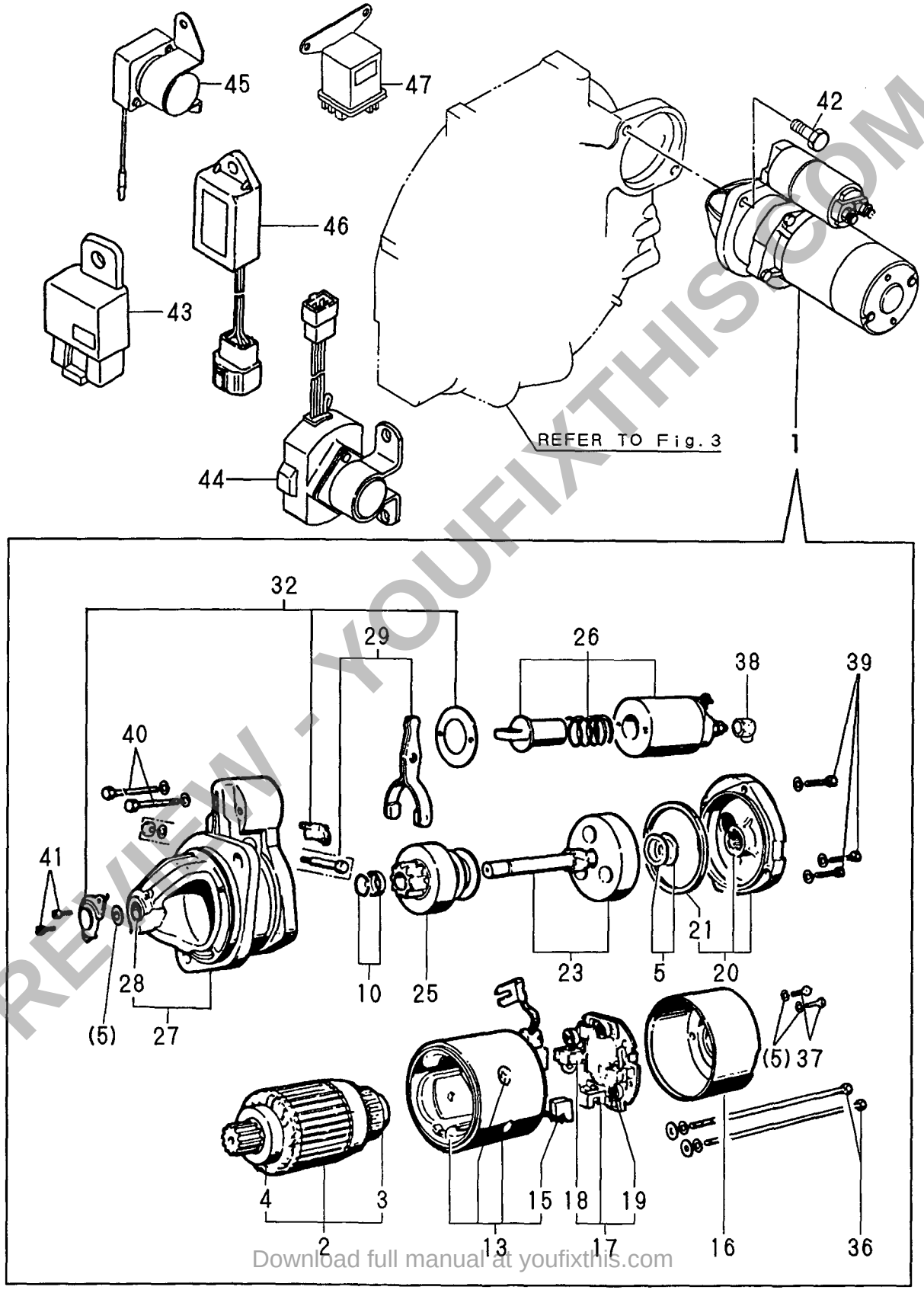

PREVIEW - YOUFIXTHIS.COM

Download full manual at youfixthis.com

PREVIEW ONLY

You're viewing 8 of 40 pages

The full manual includes:

- All 40 pages, complete
- Searchable PDF (find any keyword)
- No watermarks
- Instant download
- Print-ready quality

GET FULL MANUAL NOW

Yanmar 4TNE84T-BS, 4TNE84T-BS (B50W-1), Y00B6190 Parts Catalog

Scan or click anywhere
youfixthis.com

Click anywhere on this page to get the full manual