Fig. 1 CYLINDER BLOCK

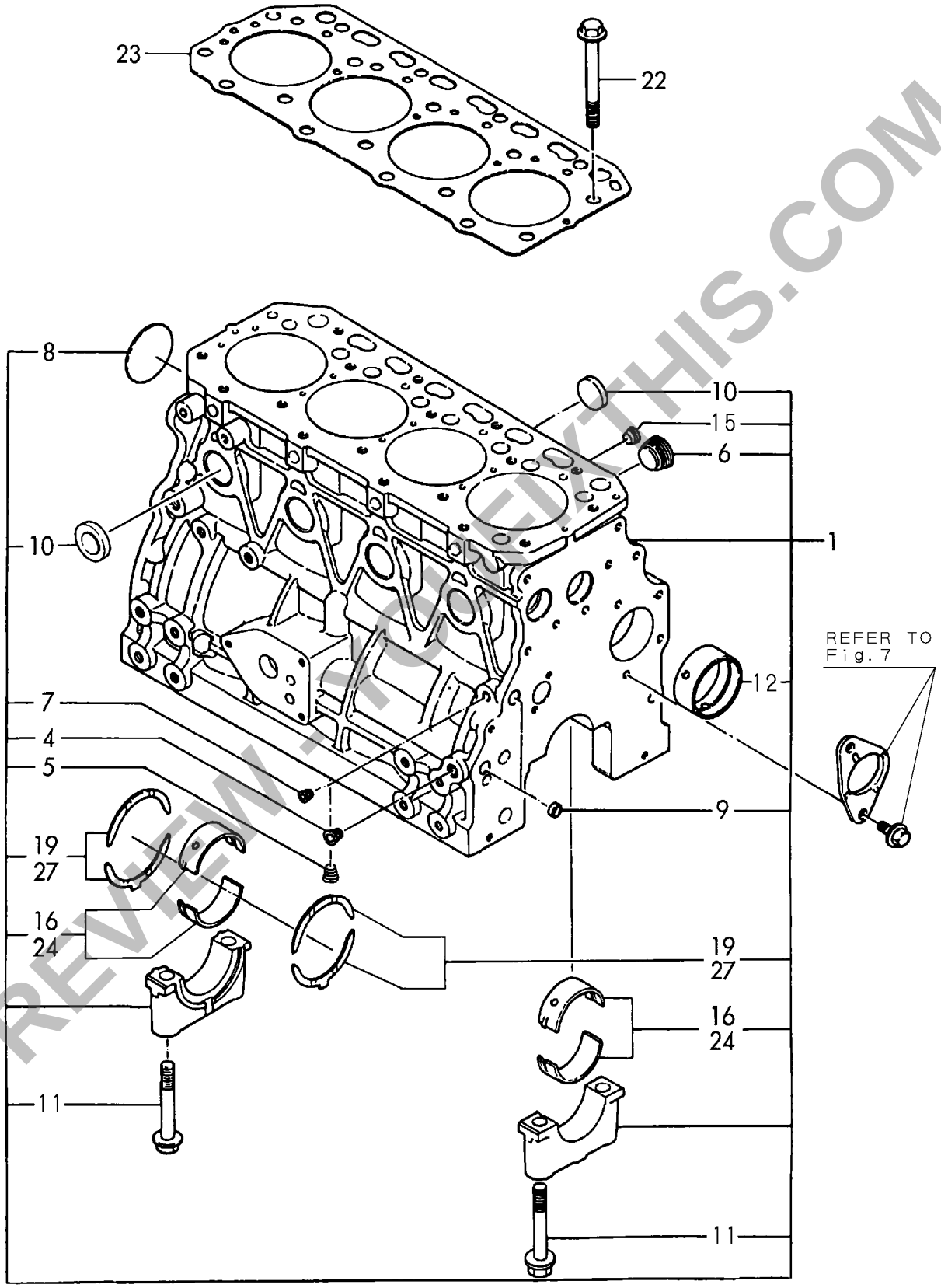

PREVIEW - YOUFIXTHIS.COM

Download full manual at youfixthis.com

```
1,1,,729407-01561,,"BLOCK ASSY, CYLINDER",1,1,,,,,,,,,,,,,,,,,I
4,3,,124160-01910,,"PLUG PT1/4",2,2,,,,,,,,,,,,,,,,
5,3,,124160-01910,,"PLUG PT1/4",1,1,,,,,,,,,,,,,,,,
6,3,,171051-01921,,PLUG,1,1,,,,,,,,,,,,,,,,
7,3,,23871-010000,,"PLUG PT1/8,SCREW",1,,,,,,,,,,,,,,,,,,
7-1,3,,23876-010000,,"PLUG PT1/8,SCREW",1,1,,,,,N,,GZ-99001,E/#38932,,,,,,,,
8,3,,27231-500000,,"PLUG 50",1,1,,,,,,,,,,,,,,,,,,
8-1,3,,129001-01250,,"PLUG 50",1,1,,,,,N,,TN-99126,E/#45625,TN-
99126,E/#48847,,,,,,,,I
9,3,,27241-120000,,"PLUG 12",2,2,,,,,,,,,,,,,,,,,,
10,3,,27241-300000,,"PLUG 30",8,8,,,,,,,,,,,,,,,,,,
11,3,,129150-02020,,"BOLT, METAL CAP",10,10,,,,,,,,,,,,,,,,,,
```

PREVIEW - YOUFIXTHIS.COM

Blurred on purpose. The manual you buy has this page in full quality.

Download full manual at youfixthis.com

```
1,1,,719810-01500,,"HOUSING ASSY, GEAR",1,1,,,,,,,,,,,,,,,,
3,2,,129795-01800,,"SEAL, OIL",1,1,,,,,,,,,,,,,,,,
4,1,,129400-01520,,"FLANGE,GEARS HOUSING",1,1,,,,,,,,,,,,,,,,
5,1,,121450-01560,,"STUD M 8X 22",3,3,,,,,,,,,,,,,,,,
6,1,,124160-01751,,"COVER,FILLER",1,1,,,,,,,,,,,,,,,,
7,1,,124240-01871,,"COVER, HO-P",1,1,,,,,,,,,,,,,,,,
8,1,,124240-01883,,"GASKET, (NON-ASB.)",1,1,,,,,,,,,,,,,,,,
9,1,,129795-01950,,"PIPE, KNOCK L=18",2,2,,,,,,,,,,,,,,,,
10,1,,129150-03100,,RETAINER,1,1,,,,,,,,,,,,,,,,
11,1,,121850-51960,,"O-RING, F.I.PUMP",1,1,,,,,,,,,,,,,,,,
12,1,,22190-080002,,"SEAL WASHER  8S",4,4,,,,,,,,,,,,,,,,
13,1,,22190-080002,,"SEAL WASHER  8S",1,1,,,,,,,,,,,,,,,,
```

Blurred on purpose. The manual you buy has this page in full quality.

PREVIEW - YOUFIXTHIS.COM

Download full manual at youfixthis.com

Fig. 4 CYLINDER HEAD & BONNET

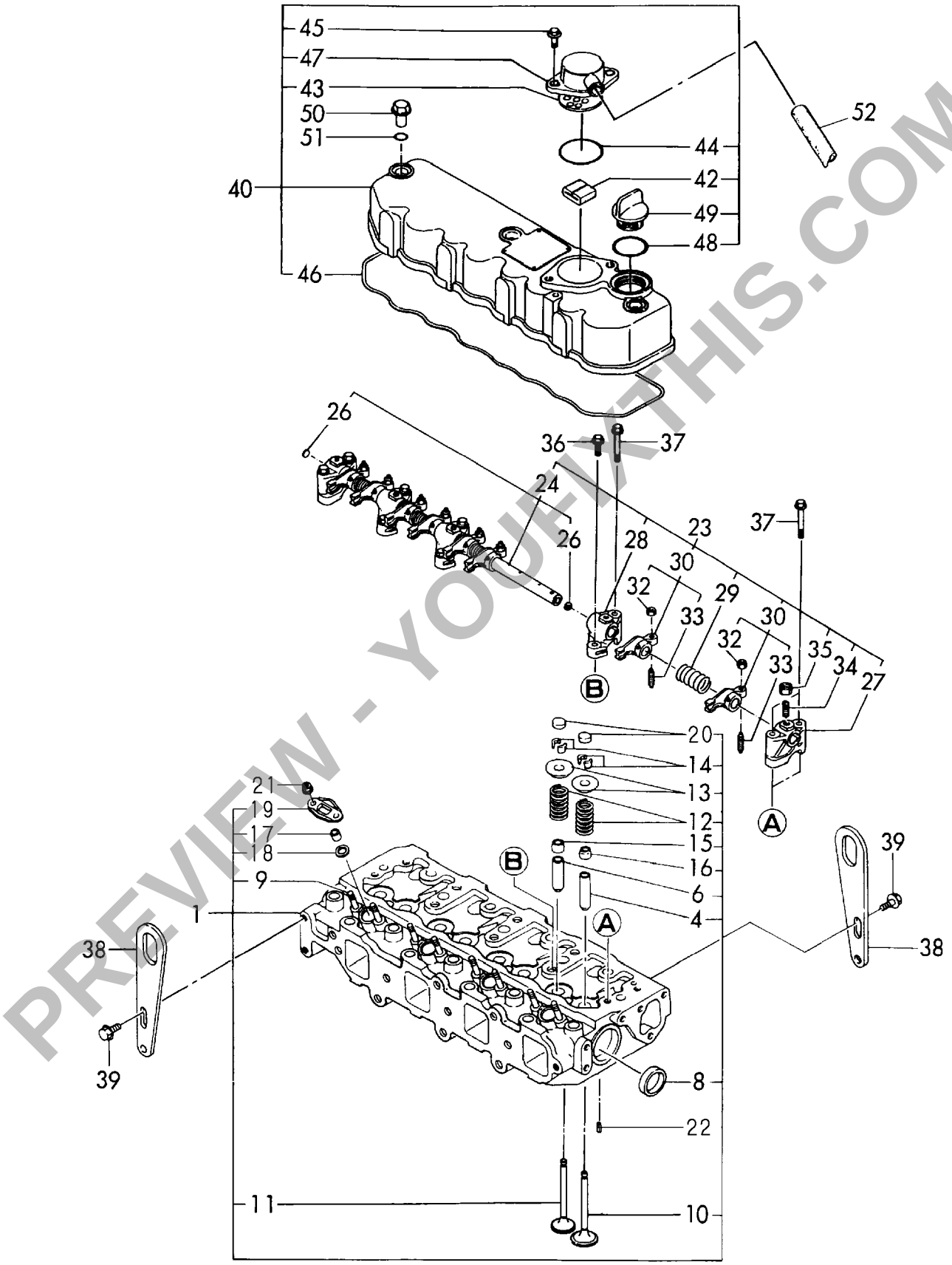

PREVIEW - YOUFIXTHIS.COM

Download full manual at youfixthis.com

```
1,1,,729402-14580,,"CAMSHAFT ASSY",1,1,,,,,,,,,,,,,,,
3,2,,129150-14101,,"GEAR, CAMSHAFT",1,1,,,,,,,,,,,,,,,
4,2,,22512-070140,,"KEY  7X 14",1,1,,,,,,,,,,,,,,,
5,2,,129150-02450,,"METAL,THRUST(CAM",1,1,,,,,,,,,,,,,,,
6,1,,26106-080162,,"BOLT M 8X 16 PLATED",2,2,,,,,,,,,,,,,,,
7,1,,129150-14400,,"ROD, PUSH",8,8,,,,,,,,,,,,,,,
8,1,,129150-14200,,TAPPET,8,8,,,,,,,,,,,,,,,
9,1,,129100-25061,,"SHAFT, IDLE GEAR",1,1,,,,,,,,,,,,,,,
10,1,,129150-25101,,"GEAR W/BUSH",1,1,,,,,,,,,,,,,,,
13,2,,129150-25920,,"BUSH, IDLE GEAR",1,1,,,,,1,,,,,,,,,
14,1,,26106-080452,,"BOLT M 8X 45 PLATED",2,2,,,,,,,,,,,,,,,
```

Blurred on purpose. The manual you buy has this page in full quality.

PREVIEW - YOUFIXTHIS.COM

Download full manual at youfixthis.com

Fig. 9 LUB.OIL SYSTEM

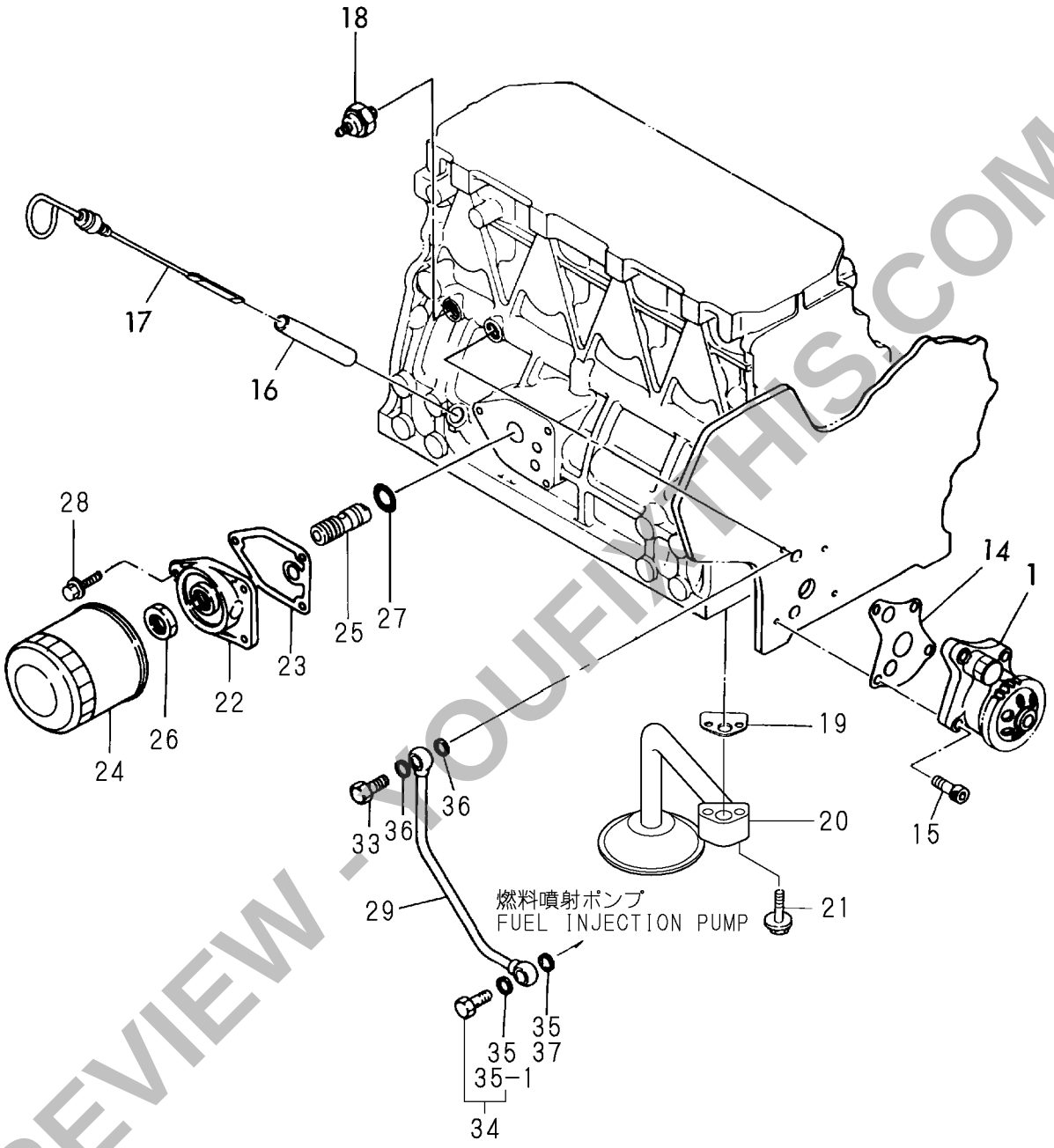

PREVIEW - YOUFIXTHIS.COM

Download full manual at youfixthis.com

Fig. 11 FUEL INJECTION PUMP

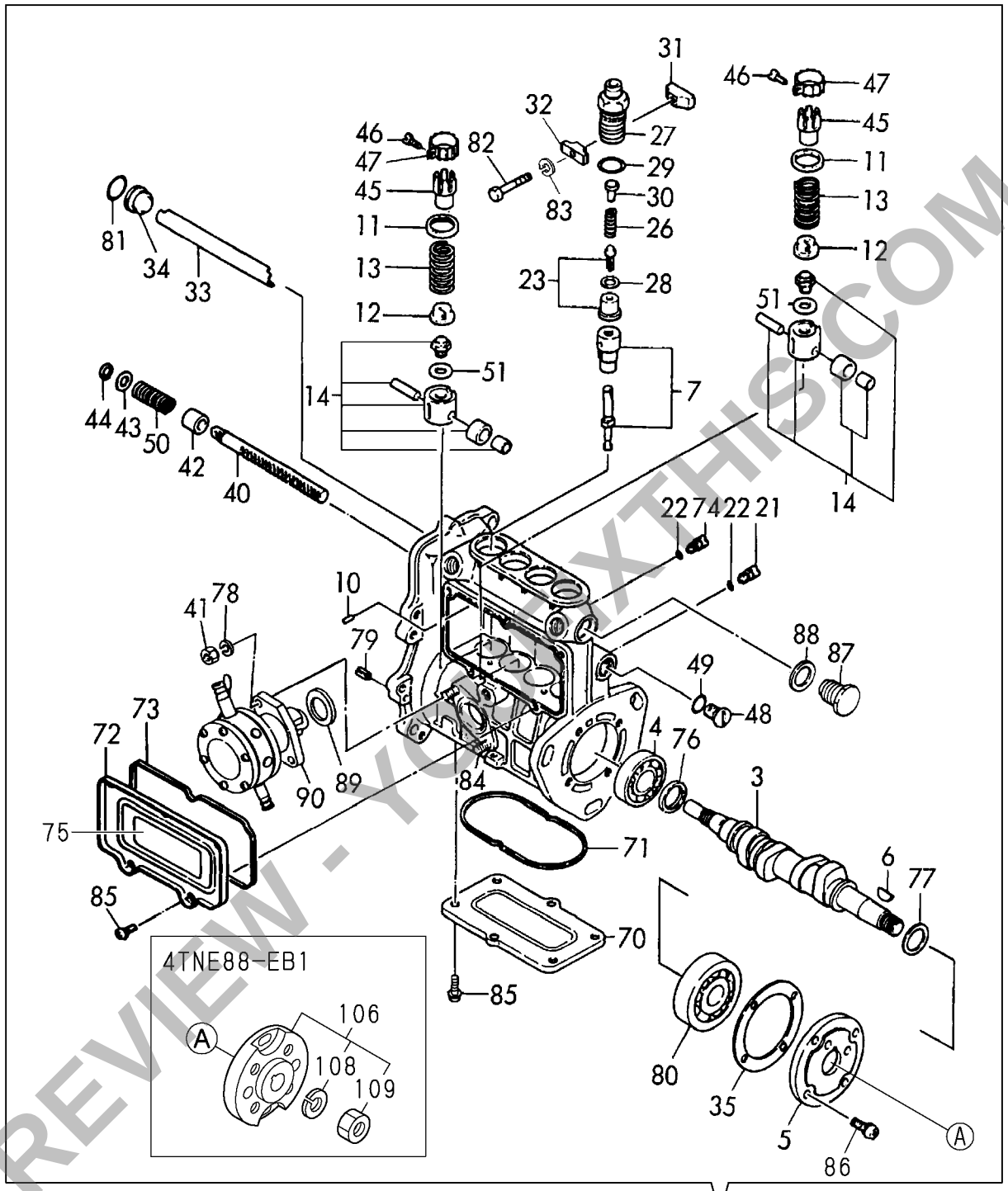

PREVIEW - YOUFIXTHIS.COM

Download full manual at youfixthis.com

```
1,2,,129155-51280,,"O-RING S6",1,1,,,,,,,,,,,,,,,
2,2,,129052-61010,,"CASE, GOVERNOR",1,1,,,,,,,,,,,,,,,
3,2,,129052-61050,,PACKING,1,1,,,,,,,,,,,,,,,
4,2,,129052-61060,,COVER,1,1,,,,,,,,,,,,,,,
5,2,,129052-61070,,PACKING,1,1,,,,,,,,,,,,,,,
6,2,,129155-61120,,"LINK L=30(MARK 0",1,1,,,,,1,,,,,,,,,,
7,2,,129155-61130,,"LINK L=31(MARK 1",1,1,,,,,1,,,,,,,,,,
8,2,,129155-61140,,"LINK L=30.5(MARK 05)",1,1,,,,,1,,,,,,,,,,
9,2,,129155-61201,,"WEIGHT ASSY, GOV.",1,1,,,,,,,,,,,,,,,
9A-1,2,,129155-61202,,"WEIGHT ASSY,GOVERNOR",1,,,,,R,,M1-
99224,E/#45625,,,,,,,,
9B-1,2,,129486-61201,,"WEIGHT ASSY,GOVERNOR",,1,,,,N,,,M1-
```

PREVIEW - YOUFIXTHIS.COM

Blurred on purpose. The manual you buy has this page in full quality.

Download full manual at youfixthis.com

PREVIEW ONLY

You're viewing 8 of 38 pages

The full manual includes:

- All 38 pages, complete
- Searchable PDF (find any keyword)
- No watermarks
- Instant download
- Print-ready quality

GET FULL MANUAL NOW

Yanmar 4TNE88, 4TNE88-(E) B1, 4TNE88-B1, 4TNE88-EB1 Parts Catalog

Scan or click anywhere
youfixthis.com

Click anywhere on this page to get the full manual