2. Types of Accessories & Attachments

Accessory/Attachment	Type	Remarks
Supercharger	Air-cooled exhaust gas turbine	
Boost air cooler	Plate finned multitubular	
Governor	Hydraulic	

PREVIEW - YOUFIXTHIS.COM

Blurred on purpose. The manual you buy has this page in full quality.

Download full manual at youfixthis.com

Table 2. Checking Table for Engine Using Marine Diesel Oil (2/3)

Div.	Part to Be Checked	Nature of Service	Checking & Servicing Frequency (hrs.)					
			,000 ~ 1,500	,000 ~ 2,500	000 ~ 5,000	8,000 ~ 10,000	000 ~ 20,000	

PREVIEW - YOUFIXTHIS.COM

Blurred on purpose. The manual you buy has this page in full quality.

Download full manual at youfixthis.com

1.Assembly Adjustment Values

Item			Adjustment Value	Remarks
	Piston top clearance (A)	mm	17.1±0.3	
Valve	Open (before T.D.C.)	deg.	60	
	Close (after B.D.C.)		41	

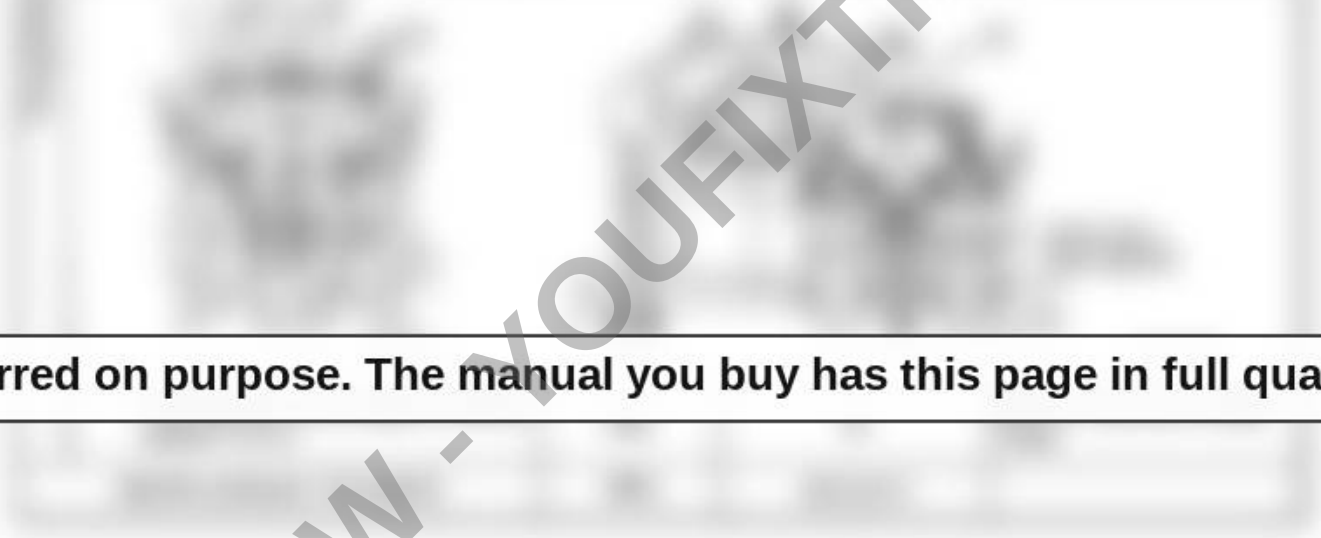

Blurred on purpose. The manual you buy has this page in full quality.

PREVIEW - YOUFIXTHIS.COM

Download full manual at youfixthis.com

Table 2. Checking Table for Engine Using Marine Diesel Oil (1/3)

Div.	Part to Be Checked	Nature of Service	Checking & Servicing Frequency (hrs.)					
			200 ~ 1,500	200 ~ 2,500	00 ~ 5,000	,000 ~ 10,000	00 ~ 20,000	

PREVIEW - YOUFIXTHIS.COM

Blurred on purpose. The manual you buy has this page in full quality.

Download full manual at youfixthis.com

1. Precautions Prior to Maintenance Servicing

Indication of Warnings in Checking and Servicing

- While checking and/or maintenance servicing the engine, post a notice on a warning indicating board for danger prevention.
- Strive for safety, maintaining a close contact with the respective parties concerned.
- Strive to prevent a danger from emerging, forbidding other than the parties concerned to enter the engine installed place (and/or the engine room), for instance.





Immediately After an Engine Stop

⚠ DANGER



Do not open the side cover of crankcase for at least 10 minutes after having stopped the engine. Otherwise, entry of external air may result in explosion.

⚠ CAUTION

Take care not to get burnt.



•Immediately after the engine has stopped, the whole engine is heated. Therefore, take care not to get burnt.
Take care not to allow your hands, body and clothing to make contact with the turbocharger, exhaust manifold, exhaust pipe and engine as a whole.
•If you attempt to drain oil while the engine is still hot, take care not to get burnt with splash of oil.
•If you disassemble the cooling water system while the engine is still hot, vapor or hot water may blow out, causing you to get burnt.
•Wait until the engine becomes cool, then wrap the disassembling part with cloth or the like and slowly loosen it.

PREVIEW - YOUFIXTHIS.COM

Download full manual at youfixthis.com

2. Engine Lifting Procedures

⚠ WARNING

In order to prevent accident, be sure to observe the following instructions when lifting the engine.

- **Select the wire and shackle with the sufficient capacities to lift the engine.**
- **Adjust the wire length correctly so that the engine will not tilt when lifted.**
- **Place wooden blocks, etc. to the positions where the wire contacts the engine or driven equipment.**
- **Do not enter under the lifted engine**

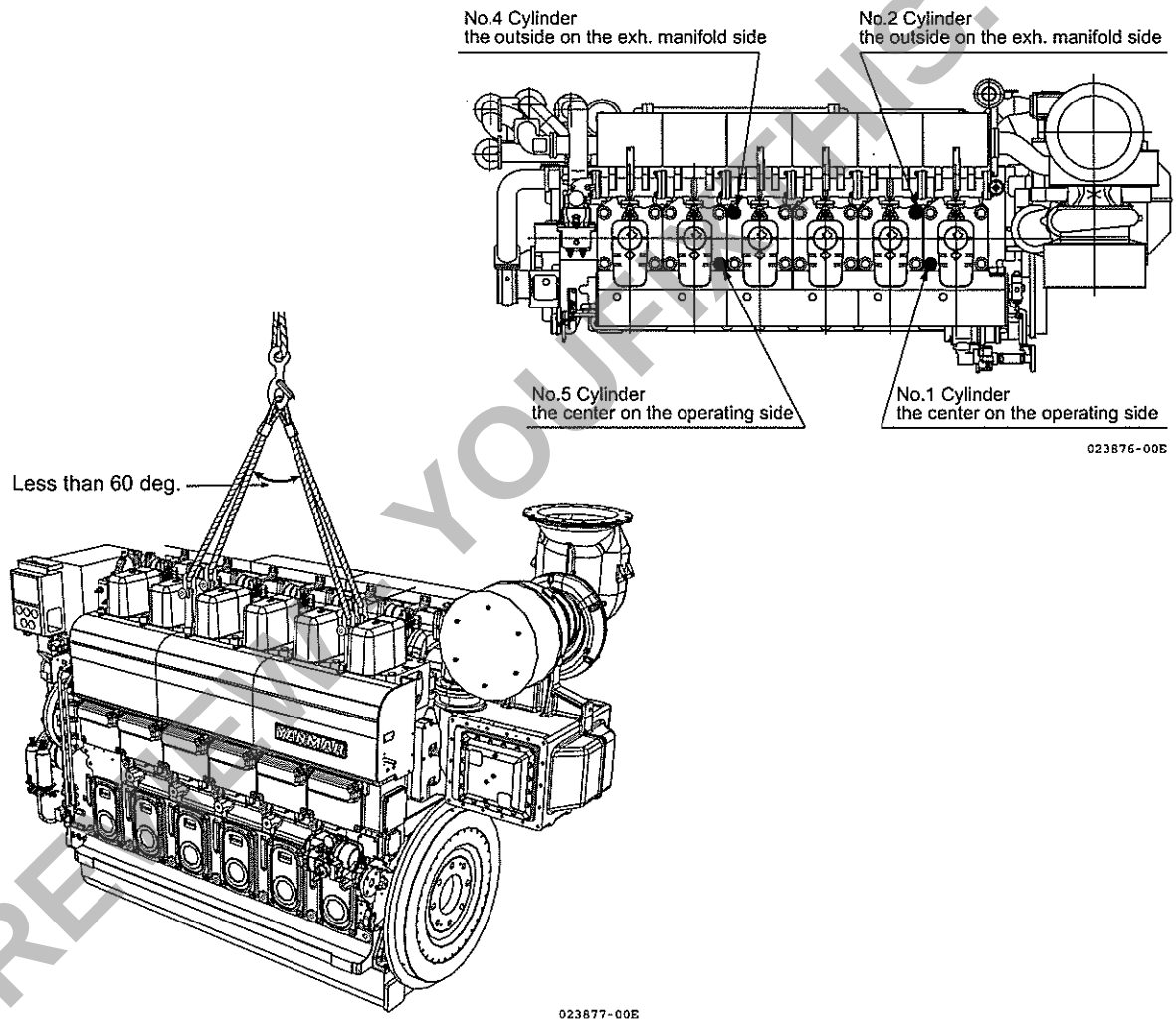

Lifting sling attaching points Engine (singly)

- Install the special lifting fixture to the head tightening bolts of the No.2 and 3 cylinders and No.5 and 6 cylinders.
- Check that the cylinder heads have been tightened with the specified hydraulic pressure before lifting.
- Keep the lifting angle of the wire within 60 degrees.

Reduction - reversing gear (Marine gear)

- For the wire rope attaching points, refer to the respective Operation Manuals.

PREVIEW YOUFIXTHIS.COM
Download full manual at youfixthis.com

Preparation Prior to Working

- Since a working area will be stained/smudged, put it in good order.
- Prepare engine jigs and tools ready to use.
- Prepare oil, genuine parts, waste cloth, wire, etc. according to the nature of work to be done.
- Secure a work bench fitted to the height of the engine.

Use prohibition standard of wire rope

Check the wire rope well before using it. Do not use the wire rope in the following cases.

Breakage	More than 10% of the wire is broken within 1 twist.	
Wear	The diameter has decreased more than 7% of the nominal diameter.	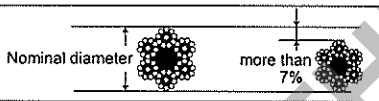
Torsion	The wire is twisted.	
Deformation	The wire has a lot of deformation or corrosion.	
Damaged wire end	The loop end is unraveled or worn by the stopper.	

019687-01E01

PREVIEW - YOUFIXTHIS.COM

Download full manual at youfixthis.com

● Periodically measure the inner diameter of the cylinder liner because the amount of wear on the inner surface of the cylinder liner varies, according to the level of control of the lubricating oil used, the cooling water temperature and the normal working load.

Measure the inner diameter of the cylinder liner while it is still in the cylinder block.

● Remove the cylinder liner periodically and check for corrosion because the cooling water may cause corrosion in the cylinder liner water jacket and corrode the outer surface of the cylinder liner.

1) Disassembly preparation

(1) Prepare the following special tools:

No. in the drawing	Special Tool Description	Part No.
1	Spacer	151695-92040
2	Liner upper removal device	151695-92011
3	Parallel Pin	22312-100200
4	Bolt	142613-92030
5	Washer	22137-270000
6	Nut	26732-270002
7	Liner Lower removal device	151623-92020
8	Parallel Pin	22312-100250
9	Nut	26732-270002
10	Lock Nut	26772-270002
11	Eyebolt	26610-160002

(2) When removing the cylinder liner, cover the crankshaft with a sheet or protective cloth to prevent water or foreign material from sticking to it.

Fig. 01-03-1Cylinder Liner Drawing-out Procedures

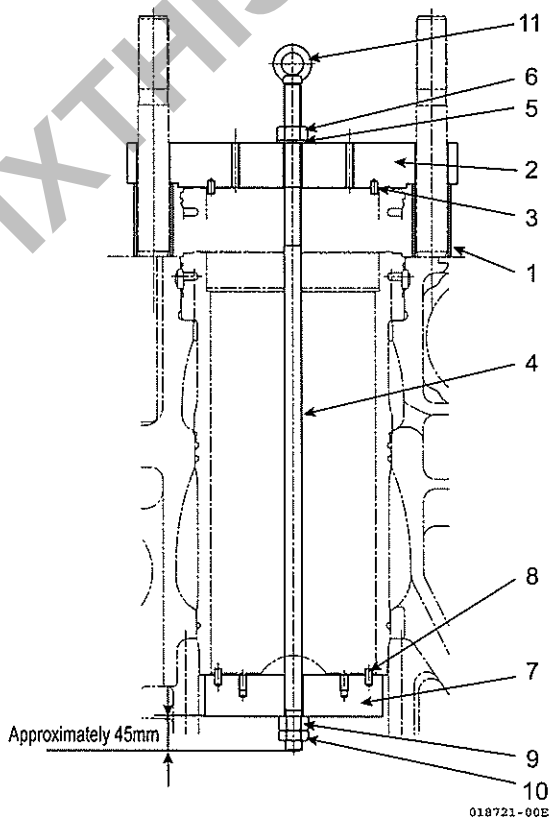

2) Disassembly

Remove the cylinder liner as follows:

(1) Attach the special tools in the ascending order of the number in the drawing, shown in Fig.01-03-1.
(2) Adjust the bolt ④ so that it protrudes below the bottom of the lower removal device ⑦ about 45mm. Lock the bolt ④ with the lock nut ⑨ .
(3) While supporting the cylinder liner to prevent it from making contact with the cylinder, tighten the nut ⑥ .
(4) Then tighten the nut ⑥ until the O-ring comes off.
(5) Place the liner on the parallel pins (③ ⑧) on the upper and lower removal devices (② ⑦), and secure the liner removal tool.
(6) Attach a wire rope to the eyebolt ⑪ , and lift out the cylinder liner.

PREVIEW - YOUFIXTHIS.COM
Download full manual at youfixthis.com

5. Push the core from the operating side toward the non-operating side.
6. When core has been drawn out about 120mm, insert a pipe under the air cooler (between the cooler and tool) and pull the core out more from the non-operating side. Insert another pipe when core is drawn out further.

NOTICE

It should be expected that the core will moves more than you might think when a pipe is placed under the core. Never stand in front of the core.

7. When the core has been drawn out about 500mm, screw the eyebolts into the thread holes in the core and suspend it.

NOTICE

Never suspend the core with a single eyebolt. The core mass is 340 kg.

2. CHECKING AND SERVICING

1. Clean the air side (finned plate) with steam or soak it in cleaning fluid. Blow compressed air across it and finally wash it in water.

NOTICE

The appropriate cleaning fluid is the following product or equivalents.
Neos Co.,Ltd. : Neos One-1
Kurita Water Industries Ltd. : Emocon 1E-55

2. Remove the water covers on the core and clean the interior of the tubes. Brush them with a long-handled brush.
3. Check the coating on the inner surface of the duct and cooler body. If the coating has peeled off, repair it.
4. Check for clogged drain holes.
5. Replace the o-rings and gaskets with new ones.

3. ASSEMBLY

Assemble the air cooler by reversing the sequence used to disassemble it.

NOTICE

- Apply clean engine oil lightly to the rail on the air cooler body before installing the core in the body. But do not use grease for this purpose.
- Use liquid seal for the thin plate on the water return cover side.

PREVIEW - YOUFIXTHIS.COM
Download full manual at youfixthis.com

CONTENTS

	Page No.
01 Cylinder Block & Cylinder Liner	
01 Outline	M51690-01-01a-00
02 Overhauling the Cylinder Block	M51690-01-02a-00
03 Overhauling the Cylinder Liner	M51690-01-03a-01
■ Parts List of Cylinder Block	
Cylinder Block	M51695-01-51b-04
Cylinder Side Cover	M51695-01-52d-01
Cylinder Side Cover (Relief Valve)	M51695-01-53c-02
Gear Case	M51695-01-54d-05
Oil Pan	M51695-01-55a-02
Oil Sealing (SFW)	M51695-01-56b-02
Oil Sealing (OFW)	M51695-01-62a-02
Breather Pipe	M51695-01-60a-02
Pump Case Cover	M51695-01-58e-00
08 Turning Device	
01 Outline (Manual Cranking)	M51690-08-01a-02
02 Operation of the Manual Cranking Device	M51690-08-02a-01
■ Parts List of Turning Device	M51695-08-51a-00 M51695-08-51c-00
11 Cylinder Head & Its Accessories	
01 Outline	M51690-11-01a-00
02 Overhauling the Cylinder Head	M51690-11-02a-01
03 Overhauling the Intake / Exhaust Valves	M51690-11-03a-02
04 Overhauling the Intake / Exhaust Valve Seat	M51690-11-04a-01
05 Overhauling the Intake / Exhaust Valve Guide	M51690-11-05a-01
06 Overhauling the Intake / Exhaust Valve Bridge & Guide	M51690-11-06a-00
07 Overhauling the Valve Rotator	M51690-11-07a-00
08 Adjusting the Intake / Exhaust Valve Head Clearance	M51690-11-08a-03
■ Parts List of Cylinder Head	
Cylinder Head	M51695-11-51a-04
Valve Arm Ass'y & Bonnet	M51695-11-52a-05
Indicator Valve	M51695-11-53a-02
14 Timing Gear, Camshaft & Intake / Exhaust Swing Arm	
01 Outline	M51690-14-01a-00
02 Overhauling the Timing Gear	M51690-14-02a-02
03 Servicing the Camshaft	M51690-14-03a-01
04 Servicing the Intake / Exhaust Swing Arm	M51690-14-04a-01
■ Parts List of Timing Gear	M51695-14-51q-00 M51695-14-51a-00
■ Parts List of Camshaft & Suction / Exhaust Swing Arm	M51695-14-52s-00 M51695-14-52c-00

PREVIEW - YOUFIXTHIS.COM
Download full manual at youfixthis.com

⚠ CAUTION

① In case of handling the lubricating oil inside the engine immediately after an engine stop, be careful not to get burnt.

② Should there be a possibility of lubricating oil to get in your eyes or to stick to your skin during handling of lubricating oil, wear protectors such as safety goggles and rubber gloves.

③ If lubricating oil get in your eyes or stick to your skin, it might cause inflammation. In such case, flush

Blurred on purpose. The manual you buy has this page in full quality.

PREVIEW - YOUFIXTHIS.COM

Download full manual at youfixthis.com

燃料ポンプ室カバー部品表
Parts List of Pump Case Cover

見出 No.	レベル Level	オーダ Order	部品番号 Part No.	部品名称	Part Name	個数 Q'ty	備考 Remarks
	1	X	751695-09121	ソクブオオイ	COVER, SIDE	1set	
1	2		151695-09050	サポート(ソクブオオイ	SUPPORT, SIDE COVER	1	
2	2		151695-09362	ソクブオオイ(ＳＦＷ.シタ	COVER, SIDE LOWER	1	
3	2		151695-09072	カバー(ソクブＦＯＰシツ ＯＦＷ	COVER, SIDE OFW	1	
4	2		151695-09081	ソクブオオイ(ＳＦＷ.ウエ	COVER, SIDE UPPER	1	
5	2		151695-09351	ソクブオオイ(ＯＦＷ.ウエ	COVER, SIDE UPPER	1	
6	2		26206-100202	ボルト １０×２０	BOLT, 10 X 20	3	
7	2		26206-120252	ボルト １２×２５	BOLT, 12 X 25	11	
37	2		26206-120202	ボルト １２×２０	BOLT, 12 X 20	4	
	1	X	751695-09030	サポート(ＦＯＰシツカバー	SUPPORT, FOP COVER	1set	
8	2		151695-09092	サポート(ＦＯＰカバー	SUPPORT, PUMP COVER	1	
11	2		146673-09170	カンツギテボルト Ｍ１６	BOLT, PIPE JOINT M16	8	
12	2		23883-160002	６カクプラグ １６	PLUG 16	4	
13	2		153672-59980	シールワッシャー(フツツＳＰＣコマル１６	SEAL WASHER 16S.<F>	12	
	1	X	751695-09041	ＦＯＰシツカバー	COVER, FUEL OIL PUMP	1set	
14	2		146673-07400	メイバン(ヤンマー	LABEL, YANMAR	1	
15	2		151695-09110	カバー Ａウエ(ＦＯＰシツ	COVER, CASE UPPER A	1	
16	2		151695-09120	カバー Ａシタ(ＦＯＰシツ	COVER, CASE LOWER A	1	
17	2		151695-09130	カバー Ａナカ(ＦＯＰシツ	COVER, CASE INNER A	1	
18	2		151695-09140	カバー Ｂウエ(ＦＯＰシツ	COVER, CASE UPPER B	1	
19	2		146673-09150	ツカミ(ＦＯＰカバー	KNOB	6	
20	2		151695-09150	カバー Ｂシタ(ＦＯＰシツ	COVER, CASE LOWER B	1	
21	2		151695-09160	カバー Ｂナカ(ＦＯＰシツ	COVER, CASE INNER B	1	
22	2		151695-09170	カバー Ｃシタ(ＦＯＰシツ	COVER, CASE LOWER C	1	
23	2		151695-09180	カバー Ｃウエ(ＦＯＰシツ	COVER, CASE UPPER C	1	
24	2		151695-09190	カバー Ｃナカ(ＦＯＰシツ	COVER, CASE INNER C	1	
25	2		151695-09450	コテイイタ(Ｆ０Ｐカバー	PLATE, FIXED	12	
26	2		151695-09251	カバー Ｃ(ＦＯＰシツウエ	COVER, PUMP CASE UP	1	
27	2		151695-09271	カバー Ｄ(ＦＯＰシツウエ	COVER, PUMP CASE UP	1	

PREVIEW - YOUFIXTHIS.COM
Download full manual at youfixthis.com

Even under the condition of normal operation, there is a wear of gears. This may cause a pitching wear, plucking and hair cracks on the tooth surface.
Besides, since the wear is related to noise and vibration periodically check the backlash of gears and contact of tooth surface.
When disassembling the timing gears, measure the backlash of gears, If the measurement exceeds the allowable value, replace the pertinent gear of bearing with the new one.

(1) Remove the cooling water pump, fuel oil feed pump, lub. oil pump and fuel oil strainer (together with its mount).
(2) Remove the gear case.

⚠ CAUTION

Lift the gear case up with rope. If the gear case falls, an accident may occur.

Since the gear case is positioned with two knock pins, jack it up with M12 bolts to remove it.

A set mark is stamped on the side of crank gear, idle gear A, idle gear B and cam gear. When assembling the timing gears, set the No.1 (or No.6) cylinder at the B.D.C., and align the set marks.

Fig. 14-02-1 Timing Gear Alignment Marks

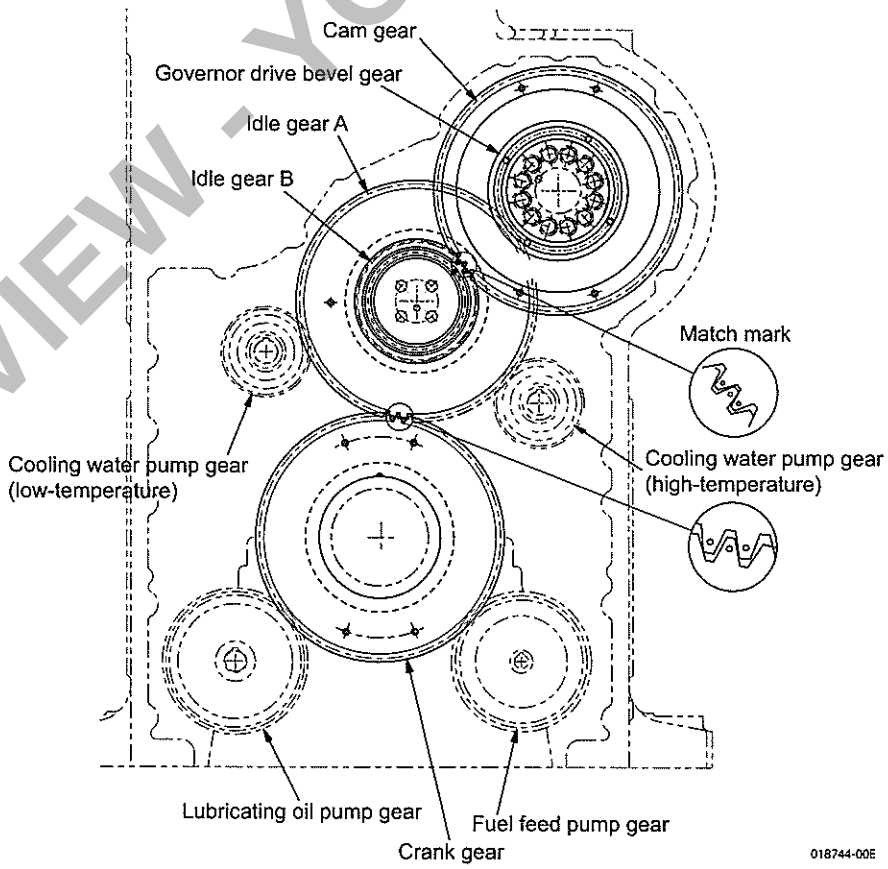

PREVIEW - YOUFIXTHIS.COM
Download full manual at youfixthis.com

6.5 Trouble-shooting table

Causes	Fault / Chapter	Temp. upstream of turbine too high	Charge air pressure and/or speed too low	Charge air pressure and/or speed too high	Heavy noise	Delayed start, short coasting	Lubricating oil leakage	Lubricating oil pressure too low	Turbocharger pumps	Turbocharger vibrates
Silencer or air filter contaminated	7.3.3	■	■						■	
Compressor contaminated	7.3.8	■	■			■				
Charge air cooler contaminated	Engine	■	■						■	
Leaking exhaust gas piping	Engine	■	■							
Exhaust gas counter pressure too high downstream of turbine	Engine	■	■						■	
Turbine wheel or compressor impeller damaged (unbalanced)	Service center	■	■		■	■				■
Defective bearing	Service center		■		■	■				■
Rotor in contact with housing	Service center		■		■	■				■
Foreign matter in turbine or compressor (unbalanced)	Service center		■	■	■	■				■
Turbine contaminated	7.3.2			■					■	■
Turbine nozzle ring contaminated	7.3.2			■					■	
Failure of fuel injection at engine	Engine	■		■						
Leaking charge air piping	Engine	■								
High air intake temperature	Engine	■								
Inlet or outlet valves of the engine contaminated	Engine	■							■	
Low air intake temperature	Engine								■	
Lubricating oil filter contaminated	Engine							■		
Lubricating oil pressure gauge defective	Engine							■		
Lubricating oil inlet temperature too high	Engine							■		
Excessive pressure in oil return	Engine						■			
Sealing air ineffective	Service center						■			
Gaskets damaged, connections leaking	Engine						■			
Plain compression rings damaged	Service center						■			

PREVIEW - YOUFIXTHIS.COM

Download full manual at youfixthis.com

18	過給機（T/FW側）部品表 Parts List of Turbocharger (FW Side T/C)	No. 18-67b-02	Page 2/2

見出 No.	レベル Level	オーダ Order	部品番号 Part No.	部品名称	Part Name	個数 Q'ty	備考 Remarks
1	1		151696-18310	カキユウキ(ＳＴ５	TURBINE, ST5	1	
	1	X	751695-18210	Ｔ／Ｃサポートシクミ	T/C SUPPORT ASS'Y	1set	
2	2		151695-18320	サポート(Ｔ／Ｃ	SUPPORT, T/C	1	
3	2		151695-18130	ボルト(Ｍ２０ホ	BOLT, M20	2	
4	2		26152-200452	ボルト Ｍ２０×４５	BOLT M20 X 45	4	

PREVIEW - YOUFIXTHIS.COM

Download full manual at youfixthis.com

Attention! Make sure that the coupling is protected against contact with oil, solvents and other chemicals.

We would like to point out that before commissioning you have to make sure that all assembling auxiliaries have been removed from the coupling.

A coupling shield has to be provided, according to the accident prevention regulations. If there are no other objections having priority, these shields have to be made of perforated plates or expanded metal to ensure a good ventilation of the coupling as well. Please refer to safety regulation paragraph 1.3

7 Maintenance



Stop the system for maintenance work.
Safely protect the system against unintentional starting resp. rotation.

Function and service life of highly-flexible couplings are decisively determined by construction and design, but also by the elastomer material selected and its resistance against environmental influences.

7.1 Operating performance considering the mechanical properties of the Elastomer material

Basically, the highly-flexible RATO-S coupling does not require maintenance. In many cases, however, the highly-flexible RATO-S coupling is an indicator for malfunctions in the system.

We recommend a check of the highly-flexible part in case of exceptional incidents, e. g. propeller ground contact, short circuit, disturbance of synchronization, governor hunting or emergency cut-off. Criteria for this purpose are given in document S/R-CRIT-1/10a up to 10/10a:

- Specification of limit values for the permissible permanent set depending on the size.
- Evaluation of surface cracks caused by ageing and their treatment including additional measures according to document S/R/DS/DG-COAT-1/7 – 7/7.

In addition to a check of the flexible part it is recommended to carry out an alignment control within the scope of the engine inspection intervals.

Standard values are given in document S/R-A-1/5 up to 5/5.

7.2 Operating performace considering the chemical properties of the Elastomer material

Caoutchouc (NR) is mainly used as elastic material in highly-flexible Elastomer couplings. Because of its excellent dynamic properties (stablility / elasticity), actually there is no equivalent alternative ma-

PREVIEW - YOUFIXTHIS.COM
Download full manual at youfixthis.com

4. Assembly of the Connecting Rod Big end Housing

1. Installation of the Crankshaft Bearings
   1- When replacing the bearings, replace them as a pair of upper and lower bearings.
   2- Note that the lower bearing has oil holes in it, while the upper bearing does not. Do not reverse them.
2. Installation of the Connecting Rod Big end Housing
   Install the connecting rod big end housing in essentially the reverse of the disassembly procedure.
   1- Install the special tools on the cylinder block as described section 2-1) "Preparations for Disassembly".
   2- Clean the crankshaft bearing and the big end housing.
   3- Turn the flywheel and rotate the crankshaft to a position on the side opposite the operating side.
   4- Install the bearing in the big end housing without applying the oil to the back of the bearing.
   5- Apply clean oil on the sliding surface of the crankshaft bearing and set the big end housing on Tool B.
   6- Adjust the crankshaft position so that its center matches the center of the housing.
   7- Install the upper and lower parts of the big end housing on the crankshaft and screw the connecting rod nuts onto the rod bolts.
      • Do not allow the crankshaft bearing to fall.
      • Before installing the big end housing, make sure the straight pins on top are normal.
   8- Set the hydraulic jack on the connecting rod bolts and connect the pump using the same procedure as described in section 2-2), "Disassembly of the Rod Nuts".
      • Make sure that the hydraulic hoses are completely attached to the coupler.
   9- Operate the hydraulic pump to boost the hydraulic pressure to the specified pressure.
   10- Turn the nut clockwise with the turning handle until the bearing surface contacts the connecting rod.
   11- Gradually open the relief valve of the hydraulic pump to lower the pressure to 0MPa.
   12- Remove the hydraulic jack and hoses after making sure that pressure is 0MPa.
   13- Remove Tools A and B.

5. Assembly of the Connecting Rod

Before installing the connecting rod, it is necessary to install the piston on the small end of the connecting rod. Therefore, refer to the following section.

22-02-3 Installing the Piston

1. Installation of a Connecting Rod
   1- Turn the crankshaft position to the B.D.C. (Bottom Dead Center) position.
   2- Put the mating surface of the big end on the upper side of the journal. (This position will be held by its own weight.)
   3- Install the piston according to the procedure described in section 22-02-3 "Installation of a Piston".
   4- Push the piston down until it contacts the mating surface of the connecting rod and the big end housing.
   5- Make sure that straight pins are correctly placed.
2. Fastening the upper Rod bolts (angular method)
   The connecting rod bolts are tightened using the angular method. In order to tighten the bolts correctly, marks indicating the specified clamping angle are stamped on the connecting rod (at two points, A & B).

PREVIEW - YOUFIXTHIS.COM
Download full manual at youfixthis.com

30	潤滑油配管部品表 潤滑油管(ポンプ～クーラ)部品表 Parts List of Lubricating Oil Pipe (Pump ～ Cooler)	No. 30-57q-02	Page 1/2

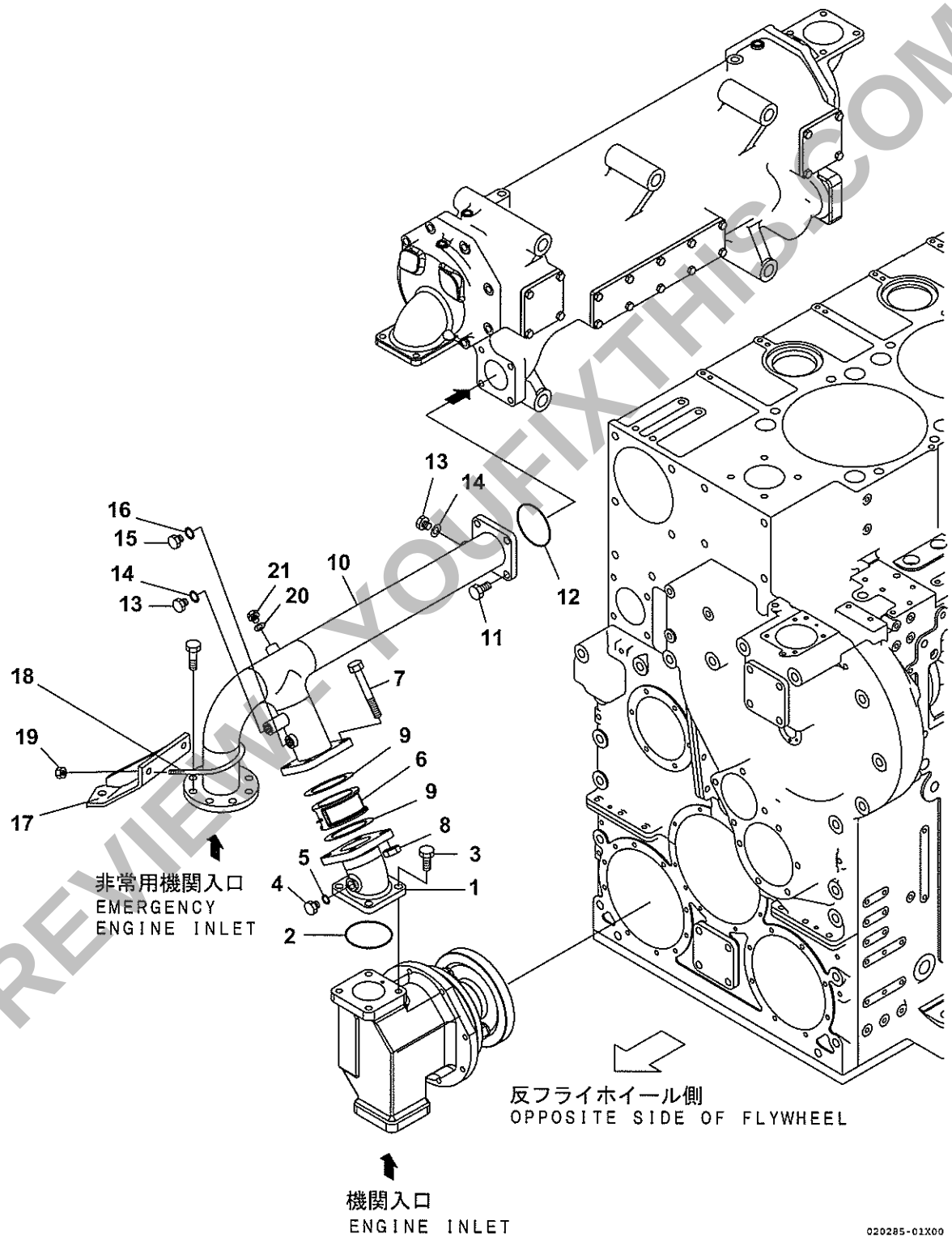

PREVIEW YOUFIXTHIS.COM

Download full manual at youfixthis.com

見出 No.	レベル Level	オーダ Order	部品番号 Part No.	部品名称	Part Name	個数 Q'ty	備考 Remarks
25	1		26463-100000	U ボルト(D １００	U-BOLT, 100	1	
26	1		26706-120002	ナット １２	NUT, 12	4	
27	1		23414-170000	パッキン(マル １７×１.０	GASKET, 17 X 1.0	1	
28	1		23894-030002	６カクプラグ Ｇ ３／８	PLUG, G 3/8	1	

PREVIEW - YOUFIXTHIS.COM

Download full manual at youfixthis.com

50	燃料フィードポンプおよび駆動装置部品表 Parts List of Fuel Feed Pump & Driving Device	No. 50-52a-02	Page 1/3

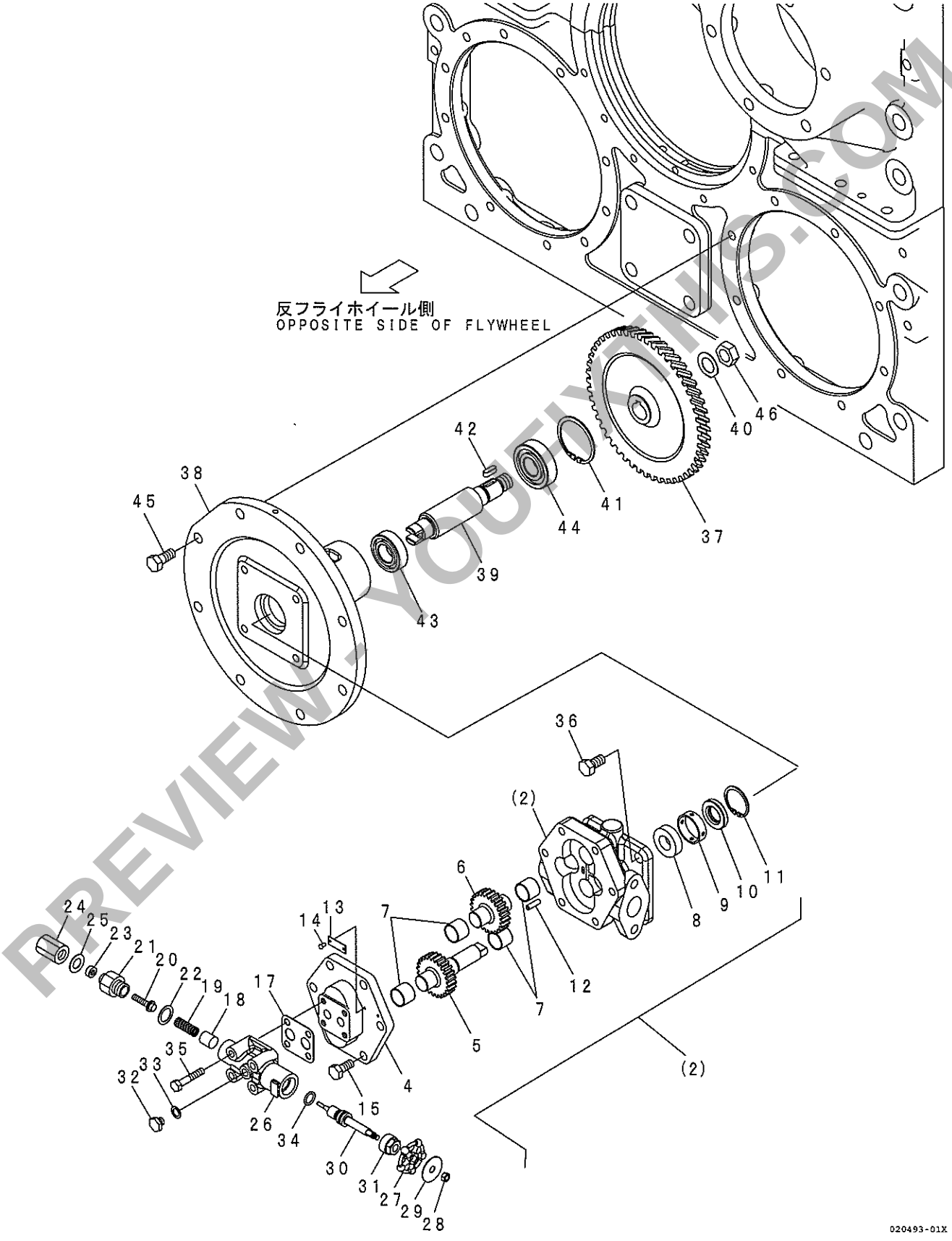

PREVIEW - YOUFIXTHIS.COM

Download full manual at youfixthis.com

An RHD hydraulic governor made by "Bosch Automotive Systems Corporation" is used for this engine.
This governor is a high performance variable speed governor. Since the hydraulic fluid is totally contained within the governor, plumbing and sub-tank installation are unnecessary when installing the governor on the engine. It is a very compact design. The governor is driven by a bevel gear that is installed on the cam gear on the engine.

Three kinds of remote controllers can be supplied and they are shown in the table below.

Controller Type	Outline of operation
Governor Motor Controller	When the motor is running, the speed setting screw moves vertically and this movement changes the load on the speed control spring to vary engine speed. The engine speed can also be changed manually in the same way, by turning the synchronizer knob.
Pneumatic Controller	When air is supplied to the pneumatic controller at a specified pressure, the air pressure acts on the diaphragm and plate. It compresses the spring which depresses the pushrod. The pushrod acts on the speed-adjustment link in the governor to change the load on the speed control spring. The engine speed can also be freely changed manually in the same way, by turning the knob on the top of the controller.
Wire Controller	A lever is installed on the governor speed control shaft and the engine speed is adjusted by the remote control cable. The engine speed can also be freely changed manually by turning the knob on the top of the controller.

Please refer to the separate "SERVICE MANUAL GOVERNOR MODEL RHD (RHD 6 & RHD 10)" for details about the design, operation, maintenance, repair and adjustment of the RHD series hydraulic governors and controllers.

PREVIEW - YOUFIXTHIS.COM

Download full manual at youfixthis.com

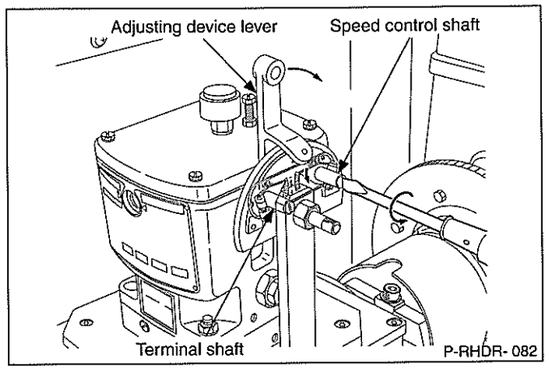

4. Run the governor at approx 600 r/min (with the needle valve fully open, ie, returned 3 turns from the fully closed position) and turn the speed control shaft. Check that the terminal shaft moves easily from 0° ~ 35° (RHD10: 0° ~ 40°) when the power piston moves through its full stroke.
   At this time, check that the terminal shaft operating torque is 9.8 N·m {1 kgf·m} for the RHD6 or 14.7 N·m {1.5 kgf·m} for the RHD10 using a spring balance attached to the adjusting device.

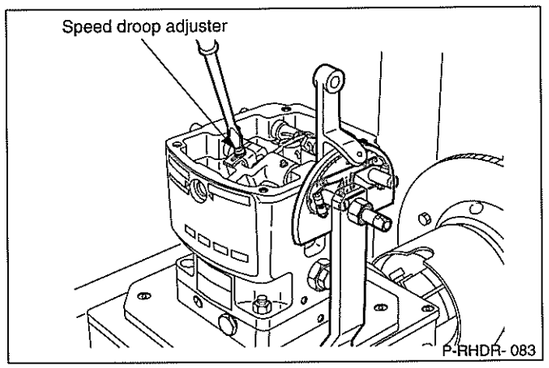

2. OPERATION TEST

The operation test is the same for LC, PC, MC, and MCL type governors.
Perform the operation test with the needle valve fully open.

(1) Speed control shaft pointer angle adjustment

1. Remove the governor cover and set the droop adjuster pointer at the specified value.

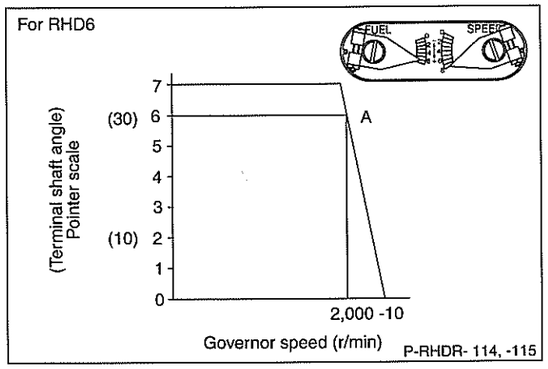

2. Run the governor at 2,000-10 r/min and secure the speed control shaft at the position (A) where the terminal shaft angle is 30° (ie, 6 on the scale). Then, align the speed control shaft pointer at 8 (on scales graduated from 0 ~ 8) and tighten the screw.

Note:

-1 On PC, MC and MCL governors, the terminal shaft is fixed (at A) by a knob.

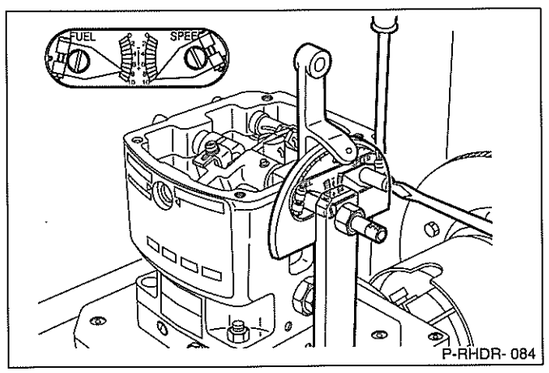

-2 On RHD10 governors, when the terminal shaft angle is 32° (ie, 8 on the scale), align the speed control shaft pointer at 10 using the screw.

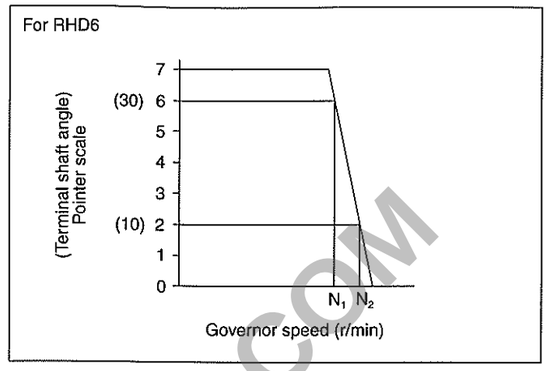

(2) Speed droop adjustment

1. Temporarily fix the droop adjuster pointer at the specified position.
2. Operate the governor at N_1 r/min and then fix the speed control shaft when the terminal shaft angle is 30° for the RHD6 or 32° for the RHD10.

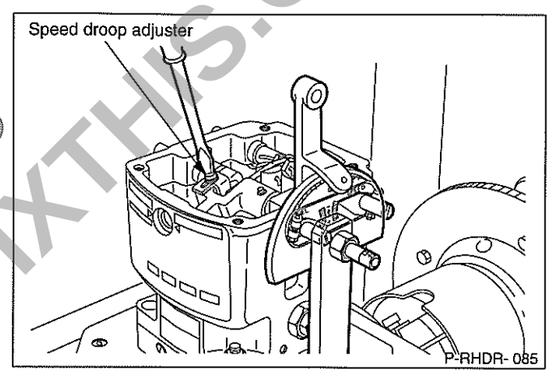

3. Gradually increase governor speed and further adjust the speed droop adjuster so that governor speed is N_2 r/min when the terminal shaft angle is returned to 10° for the RHD6 or 8° for the RHD10.

Note:
When the speed droop adjuster pointer is moved toward 0, speed droop decreases.
When the speed droop adjuster is moved toward 10, speed droop increases.

Advice
Confirm that N_2 is within the allowable speed when the speed droop adjuster is exactly as specified.

Note:
If the lever attached to the terminal shaft deviates more than ±1° during high speed operation (ie, at approx 1,800 r/min), check as follows.
Regular deviation: Check compensator related parts (housing, base, assembly, regulating valve). Replace them if necessary.
Irregular deviation: Check the flyweight assembly. Replace it if necessary.
Perform the following adjustments with the governor adjusted as described above.

PREVIEW YOUFIXTHIS.COM
Download full manual at youfixthis.com

② Adjust the ZERO and SPAN trimmers on the printed circuit board in the terminal box, within the range of 4 ~ 20mA.
Changes in the characteristics caused by each trimmer are shown in Fig. 65-18-5 & -6. Refer to these figures.

Fig. 65-18-5 Change of special characteristics for ZERO adjustment

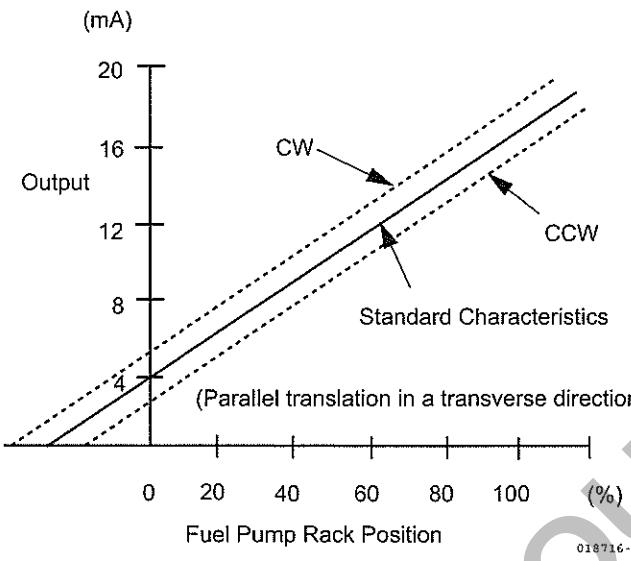

Fig. 65-18-6 Change in the characteristics from adjusting the SPAN trimmer

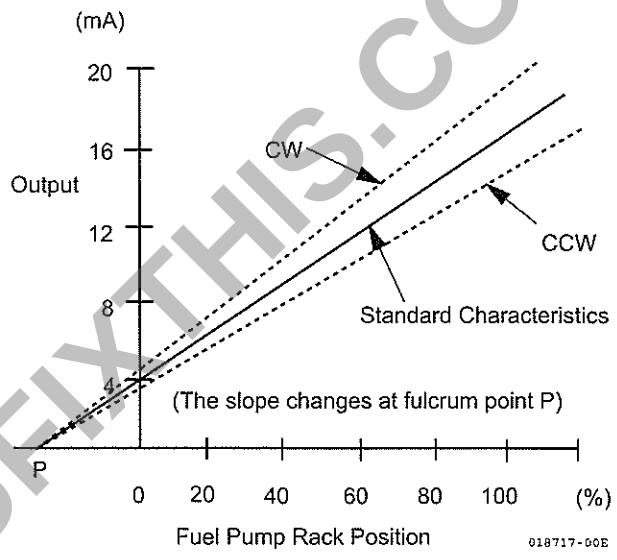

[Description of the adjustment in the computing circuit]

③ Move the rack to the 0% detection point position, and adjust the ZERO trimmer so that the output current is 4mA.

④ Move the rack to the 100% detection point position, and adjust the SPAN trimmer so that the output current is 20mA.

⑤ When the SPAN has been adjusted, there is a possibility that the current output at the 0% point may change. Therefore, check item ③ again. If necessary, adjust items ③ and ④ repeatedly.

6. Maintenance

6-1 If the mechanical relationship between the detection position and the input shaft is in good condition, it is not necessary to readjust this device.

6-2 If the mechanical relationship between the detection position and the input shaft is incorrect, adjust item 5.

6-3 This device uses an electronic circuit. Therefore, moisture, dust, etc. may cause a malfunction. Pay attention to avoid contamination.

7. Precautions

7-1 When wiring the transmitter, use a shielded wire to prevent electrical noise from interfering. Although a protective circuit is installed, it may not absorb large electrical impulses.

7-2 Do not perform any insulation resistance or withstand voltage tests on these parts. (The semiconductors may be damaged.).

PREVIEW - YOUFIXTHIS.COM
Download full manual at youfixthis.com

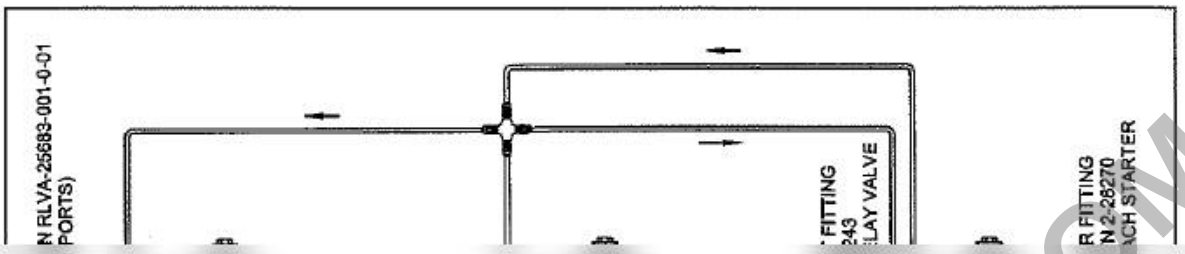

Blurred on purpose. The manual you buy has this page in full quality.

PREVIEW - YOUFIXTHIS.COM

Download full manual at youfixthis.com

PREVIEW ONLY

You're viewing 24 of 677 pages

The full manual includes:

- All 677 pages, complete
- Searchable PDF (find any keyword)
- No watermarks
- Instant download
- Print-ready quality

GET FULL MANUAL NOW

Yanmar 6EY26W Operation Manual

Scan or click anywhere
youfixthis.com

Click anywhere on this page to get the full manual