B-Type Instrument Panel

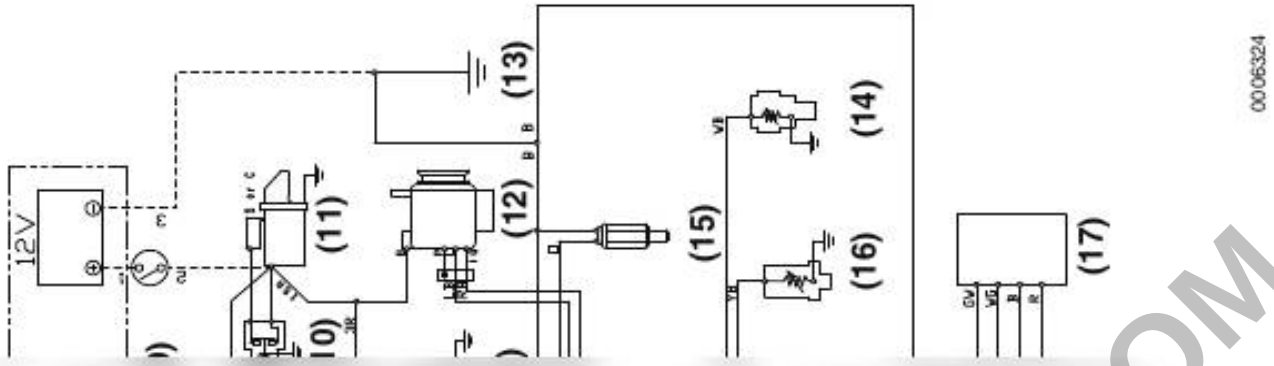

Blurred on purpose. The manual you buy has this page in full quality.

PREVIEW - YOUFIXTHIS.COM

Download full manual at youfixthis.com

COMPONENT IDENTIFICATION

Service Side (Left Side as Viewed from Propeller)

Note: 6LPA-STZP2 with stern drive shown. Components marked with an * are for 6LPA-STZP2 only.

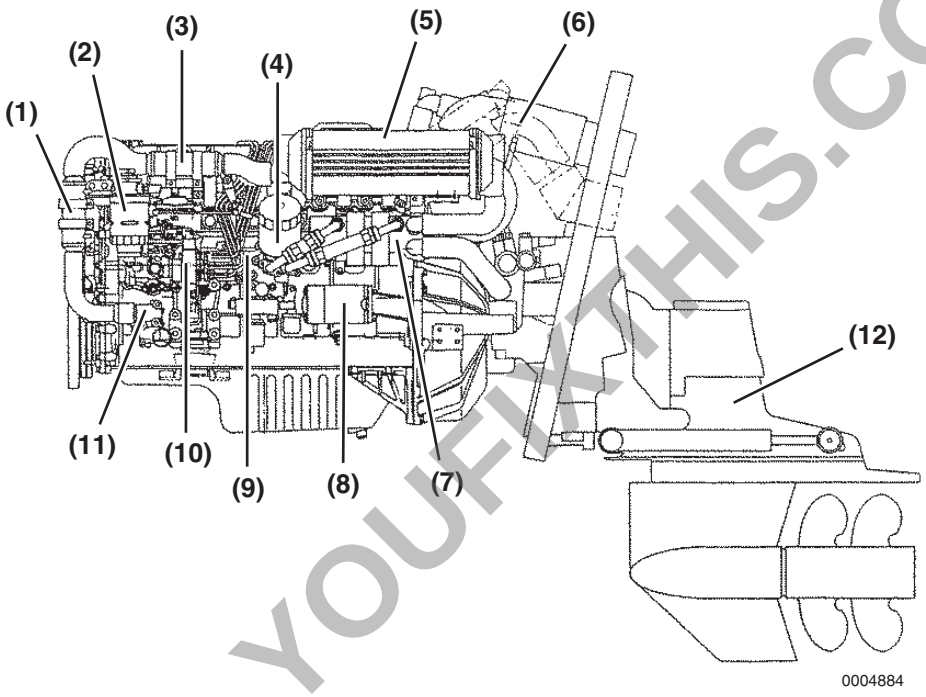

Figure 1

1 – Fuel Cooler
2 – Fuel Filter
3 – Power Steering Oil Cooler*
4 – Engine Oil Filter
5 – Intercooler
6 – Mixing Elbow
7 – Engine Oil Cooler
8 – Starter
9 – Engine Oil Cooler
10 – Fuel Injection Pump
11 – Seawater Pump
12 – Stern Drive

PREVIEW - YOUFIXTHIS.COM

TROUBLESHOOTING CHART

Symptom	Probable Cause	Measure	Reference
Indicators light on the instrument panel and alarm sounds during operation	Shift to low speed operation immediately, and check which indicator has come on. Stop the engine and inspect. If no abnormality is identified and there is no problem with operation, return to port at lowest speed and request repairs.		
• Engine oil low pressure alarm indicator comes on	Engine oil level is low.	Check engine oil level. Add or replace.	*See Adding Engine Oil on page 31.*
	Engine oil filter clogged.	Replace engine oil filter. Replace engine oil.	*See Changing the Engine Oil and Replacing the Engine Oil Filter Element on page 57.*
• Fresh water (coolant) level alarm comes on	Coolant / fresh water in coolant recovery tank is low.	Check coolant level and refill.	*See Checking and Adding Coolant on page 34.*
• Fresh water (coolant) high temperature alarm comes on	Coolant / fresh water in coolant recovery tank is low.	Check coolant level and refill.	*See Checking and Adding Coolant on page 34.*
	Leakage in fresh water cooling system causing temperature to rise.	See your authorized Yanmar Marine dealer or distributor.	-
	Contamination inside cooling system.	See your authorized Yanmar Marine dealer or distributor.	-
	Fresh water cooling pump damaged.	See your authorized Yanmar Marine dealer or distributor.	-
• Gear oil alarm comes on	Insufficient drive oil.	Check oil level and refill.	*See Marine Drive Oil on page 32*
• Fuel filter alarm comes on	Water level in fuel / water separator too high.	Drain.	*See Draining Fuel Filter / Water Separator on page 60.*
• Exhaust alarm comes on	Insufficient discharge of cooling seawater.Check that seacock is open.Damaged seawater pump.	See your authorized Yanmar Marine dealer or distributor.	-
Faulty Warning Devices	Do not operate the engine if alarm devices are not repaired. Serious accidents may result if abnormalities are not identified due to faulty indicators or alarm.		
Indicators Do Not Go On:			
• When key is turned ON • When any trouble occurs (oil pressure etc.)	No electrical current available. Circuit broken or lamp burned out.	See your authorized Yanmar Marine dealer or distributor.	-
• One of the indicators does not go out	Sensor switch is faulty.	See your authorized Yanmar Marine dealer or distributor.	-
• Battery low charge indicator does not go out during operation	V-belt is loose or broken.	Replace V-belt or adjust tension.	*See Checking and Adjusting the Alternator V-Belt Tension on page 66.*
	Battery is defective.	Check battery fluid level, specific gravity or replace battery.	*See Checking the Battery Electrolyte Level on page 57.*
	Alternator power generation failure.	See your authorized Yanmar Marine dealer or distributor.	-

PREVIEW - YOUR MANUAL.COM

Symptom	Probable Cause	Measure	Reference
Starting Failures:			
• Starter turns but engine does not start	No fuel.	Add fuel. Bleed fuel system.	*See Filling the Fuel Tank on page 28* and *See Bleeding the Fuel System on page 29*.
	Air in fuel line.	Bleed fuel system.	*See Bleeding the Fuel System on page 29*.
	Fuel filter is clogged.	Replace filter element.	*See Replacing the Fuel Filter Element on page 63*.
	Improper fuel.	Replace with recommended fuel.	*See Diesel Fuel Specifications on page 26*.
	Problem with fuel injection.	See your authorized Yanmar Marine dealer or distributor.	-
	Compression leakage from intake / exhaust valve.	See your authorized Yanmar Marine dealer or distributor.	-
• Starter does not turn or turns slowly (engine can be turned manually)	Faulty clutch position.	Shift to NEUTRAL and start.	-
	Insufficient battery charge.	Check fluid level. Recharge. Replace.	*See Checking the Battery Electrolyte Level on page 57*.
	Cable terminal contact failure.	Remove corrosion from terminals. Tighten battery cables.	-
	Faulty safety switch device.	See your authorized Yanmar Marine dealer or distributor.	-
	Faulty starter switch.	See your authorized Yanmar Marine dealer or distributor.	-
	Power lacking due to accessory drive being engaged.	See your authorized Yanmar Marine dealer or distributor.	-
• Engine cannot be turned manually	Internal parts seized.	See your authorized Yanmar Marine dealer or distributor.	-
Abnormal Exhaust Color:			
• Black smoke	Overload	Reduce load.	-
	Improper propeller matching.	See your authorized Yanmar Marine dealer or distributor.	-
	Dirty air cleaner.	Clean air cleaner.	*See Cleaning the Air Cleaner on page 65*.
	Improper fuel.	Replace with recommended fuel.	*See Diesel Fuel Specifications on page 26*.
	Faulty spraying of fuel injector.	See your authorized Yanmar Marine dealer or distributor.	-
	Low boost pressure.	See your authorized Yanmar Marine dealer or distributor.	-
	Incorrect intake / exhaust valve clearance.	See your authorized Yanmar Marine dealer or distributor.	-
• White smoke	Improper fuel.	Replace with recommended fuel.	*See Diesel Fuel Specifications on page 26*.
	Faulty spraying of fuel injector.	See your authorized Yanmar Marine dealer or distributor.	-
	Fuel injection timing off.	See your authorized Yanmar Marine dealer or distributor.	-
	Engine burning oil (excessive consumption).	See your authorized Yanmar Marine dealer or distributor.	-

PREVIEW - YOUFIXTHIS.COM

PERIODIC MAINTENANCE

○: Check or Clean ◇: Replace ●: Contact your authorized Yanmar marine dealer or distributor

System	Item	Periodic Maintenance Interval						
		Daily	Every 50 hours or monthly whichever comes first	Every 125 hours or 6 months whichever comes first	Every 250 hours or 1 year whichever comes first	Every 500 hours or 2 years whichever comes first	Every 1000 hours or 4 years whichever comes first	Every 1250 hours or 5 years whichever comes first
Whole	Visual inspection of engine exterior	○						
Fuel System	Check the fuel level and refill if necessary	○						
	Drain water and sediment from		○					

PREVIEW - YOUFIXTHIS.COM

Blurred on purpose. The manual you buy has this page in full quality.

Download full manual at youfixthis.com

ENGINE OPERATION

INTRODUCTION

This section of the *Operation Manual* describes the diesel fuel, engine oil and engine coolant specifications and how to replenish them. It also describes the daily engine checkout.

SAFETY PRECAUTIONS

Before performing any operations within this section, review the *Safety* section on page *3*.

PREVIEW - YOUFIXTHIS.COM

CONTROL EQUIPMENT

The control equipment at the helm makes remote control operation possible. It consists of the instrument panel, which is connected to the engine by a wire harness, and the remote control (throttle) handle, which is connected by control cables to the engine control lever.

Instrument Panel (Optional)

Equipment and Functions

The instrument panel has the following gauges and alarm devices.

○ = Available, — = Not Available

Gauge or Switch		New B-Type Panel See (Figure 3)	New C-Type Panel See (Figure 4)	New D-Type Panel See (Figure 5)
Switches	Key (Starter) Switch	○	○	○
	Engine Stop Button	○	○	○
	Alarm (Buzzer)	○	○	○
	Alarm (Buzzer) Stop Switch	○	○	○
	Backlight Switch for Gauges	○	○	○
Warning Indicators	Battery Low Charge	○	○	○
	Fresh Water (Coolant) High Temperature	○	○	○
	Engine (Lube) Oil Low Pressure	○	○	○
	Fresh Water (Coolant) Level	—	○	○
	Exhaust (Cooling Seawater Flow)	○	○	○
	Fuel Filter (Water Separator)	○	○	○
	Gear Oil (6LPA-STZP2 Only)	—	○	○
Gauges	Tachometer with Hourmeter	○	○	○
	Engine (Lube) Oil Pressure Gauge	—	○	○
	Fresh Water (Coolant) Temperature Gauge	—	○	○
	Turbocharger Boost Pressure Gauge	—	—	○
Clock	Quartz Clock	○ (Option)	○ (Option)	○
Indicator	Preheat Indicator	○ (Option)	○ (Option)	○

PREVIEW YOUFIXTHIS.COM

6LPA-STP2

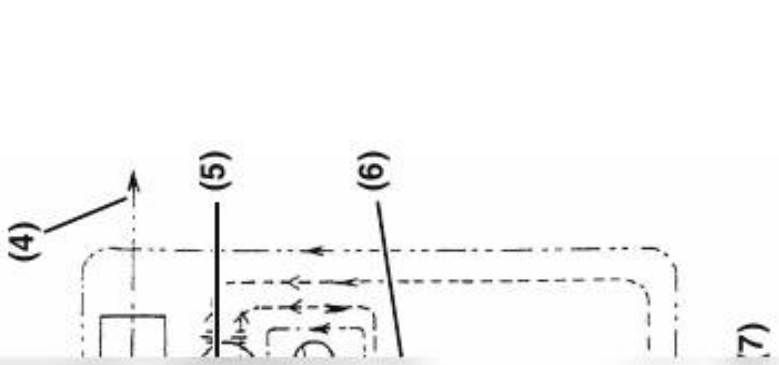

Blurred on purpose. The manual you buy has this page in full quality.

PREVIEW - YOUFIXTHIS.COM

Download full manual at youfixthis.com

2. Keep the fuel container stationary for several hours to allow any dirt or water to settle to the bottom of the container. Use a pump to extract the clear, filtered fuel from the top of the container.

Fuel Tank (Optional)

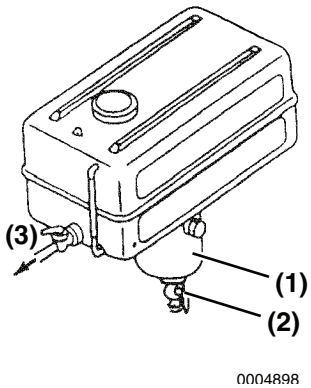

Figure 2

1 – Sediment Bowl
2 – Drain Cock
3 – Fuel Line to Engine

Install a drain cock **(Figure 2,** (2)) at the bottom of the fuel tank to remove water and contaminants from the sediment bowl **(Figure 2,** (1)).

The fuel outlet should be positioned 20 to 30 mm (0.75 to 1.125 in.) above the bottom of the tank so that only clean fuel is distributed to the engine.

Fuel System

Install the fuel line from the fuel tank to the fuel injection pump as shown in **Figure 3**.

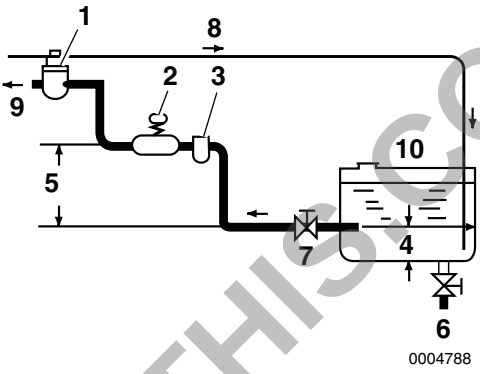

Figure 3

1 – Fuel Filter
2 – Fuel Feed Pump (Priming Lever)
3 – Fuel / Water Separator (Optional)
4 – Approximately 20 - 30 mm (0.75 - 1.125 in.)
5 – Within 500 mm (20 in.)
6 – Drain Cock
7 – Fuel Cock
8 – Fuel Return Line
9 – To Fuel Injection Pump
10 – Fuel Tank

Filling the Fuel Tank

Before filling fuel tank for the first time:

⚠ WARNING

Fire and Explosion Hazard.
NEVER refuel with the engine running.

Rinse fuel tank with kerosene or diesel fuel. Dispose of waste properly.

PREVIEW - YOUFIXTHIS.COM

SAFETY

Blurred on purpose. The manual you buy has this page in full quality.

PREVIEW - YOUFIXTHIS.COM

Download full manual at youfixthis.com

TABLE OF CONTENTS

Blurred on purpose. The manual you buy has this page in full quality.

PREVIEW - YOUFIXTHIS.COM

Download full manual at youfixthis.com

DIESEL FUEL 26
Diesel Fuel Specifications 26
Handling of Diesel Fuel 27
Fuel Tank (Optional) 28
Fuel System 28
Filling the Fuel Tank 28
Bleeding the Fuel System 29
ENGINE OIL 30
Engine Oil Specifications 30
Engine Oil Viscosity 31
Checking the Engine Oil 31
Adding Engine Oil 31
MARINE DRIVE OIL 32
Mercruiser® Bravo Stern Drive Oil Specifications 32
Checking and Adding Marine Drive Oil 32
Checking and Adding Power Steering Oil (6LPA-STZP2 Models) 33
ENGINE COOLANT 33
Engine Coolant Specifications 33
Coolant (Closed Cooling System) 34
Checking and Adding Coolant 34
CRANKING THE ENGINE 36

ENGINE OPERATION 37
INTRODUCTION 37
SAFETY PRECAUTIONS 37
STARTING THE ENGINE 39
If the Engine Fails to Start 40
Starting at Low Temperatures 41
After the Engine has Started 42
REMOTE CONTROL HANDLE OPERATION 43
Acceleration and Deceleration 43
Shifting the Engine 44
CAUTIONS DURING OPERATION 45
SHUTTING DOWN THE ENGINE 46
Normal Shutdown 46
CHECKING THE ENGINE AFTER OPERATION 47

PERIODIC MAINTENANCE 49
INTRODUCTION 49
SAFETY PRECAUTIONS 49

PREVIEW - YOUFIXTHIS.COM

PREVIEW ONLY

You're viewing 12 of 106 pages

The full manual includes:

- All 106 pages, complete
- Searchable PDF (find any keyword)
- No watermarks
- Instant download
- Print-ready quality

GET FULL MANUAL NOW

Yanmar 6LPA-STP2, 6LPA-STZP2 Operator Manual

Scan or click anywhere
youfixthis.com

Click anywhere on this page to get the full manual