2. Safety Precautions

(1) SERVICE AREA

⚠ WARNING



• Sufficient Ventilation

Inhalation of exhaust fumes and dust particles may be hazardous to ones health. Running engines welding, sanding, painting, and polishing tasks should be only done in well ventilated areas.

⚠ CAUTION

• Safe / Adequate Work Area

The service area should be clean, spacious, level and free from holes in the floor, to prevent "slip" or "trip and fall" type accidents.

⚠ CAUTION

• Clean, orderly arranged place

No dust, mud, oil or parts should be left on the floor surface.
[Failure to Observe]
An unexpected accident may be caused.

⚠ CAUTION



• Bright, Safely Illuminated Area

The work area should be well lit or illuminated in a safe manner. For work in enclosed or dark areas, a "drop cord" should be utilized. The drop cord must have a wire cage to prevent bulb breakage and possible ignition of flammable substances.

⚠ CAUTION



• Safety Equipment

Fire extinguisher(s), first aid kit and eye wash / shower station should be close at hand (or easily accessible) in case of an emergency.

PREVIEW - YOUFIXTHIS.COM

Download full manual at youfixthis.com

1.2 Main specifications

STP: 295kW(400hp) / 3198min^{-1}, UTP: 254kW(345hp) / 3198min^{-1}

Engine model	Unit	6LY3-ETP	6LY3-STP	6LY3-UTP
Marine gear model	-	-	-	-
Use	-	Pleasure use		
Type	-	Vertical water cooled 4 cycle diesel engine		
Combustion system	-	Direct injection		
Number of cylinders	-	6		

PREVIEW - YOUFIXTHIS.COM

Blurred on purpose. The manual you buy has this page in full quality.

Download full manual at youfixthis.com

2.2.2 Inspection after initial 50 hours or one month operation

Be sure to check the following points after initial 50 hours or one month operation, whichever comes first.

No.	Inspection Item
(1)	Replace the engine lube oil and lube oil filter
(2)	Check the electronic control system
(3)	Adjust the propeller shaft alignment

(1) Replace the engine lube oil and lube oil filter (1st time)

During initial operation of the engine, the oil is quickly contaminated due to the initial wear of internal parts. The lube oil must therefore be replaced early. Replace the lube oil filter at the same time.

It is easiest and most effective to drain the engine lube oil after operation while the engine is still warm.

⚠ CAUTION

Beware of oil burns if extracting the Lube oil while it is hot.

1) Remove the lube oil dipstick. Attach the oil drain pump and pump out the oil.
   For easier draining, remove the lube oil filler cap (yellow) at the top of the rocker arm cover.
2) Remove the lube oil filters with the filter detach / attach tool. (Turn counterclockwise.)
3) Clean the filter installation face of the filter bracket. Replace the filter(s) with new one(s). Apply lube oil on rubber packing and tighten by hand until rubber packing touches the sealing surface.
4) Turn an additional 3/4 of a turn for the full flow filter with the attachment tool. (Turn clockwise.)
   Turn an additional one turn for the bypass filter with the attachment tool. (Turn clockwise.)
5) Fill with new lube oil. (See 2.2.1)
6) Perform a trial run and check for oil leaks.
7) Approximately 10 minutes after stopping the engine, remove the oil dipstick and check the oil level. Add oil if the level is too low.

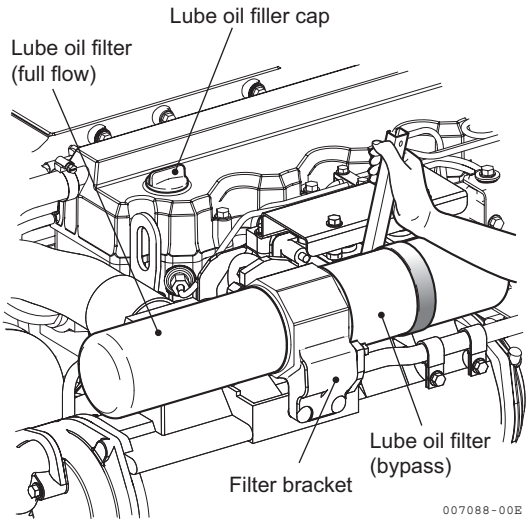

PREVIEW - YOUFIXTHIS.COM

Download full manual at youfixthis.com

3.2 Troubleshooting

It is important to thoroughly under stand each system and the function of all of the parts of terse systems. A careful study of the engine mechanism will make this possible. When problems arise, it is important to carefully observe and analyze the indications of trouble in order to save time in determining their cause. Begin by checking the most easily identifiable causes of difficulty. Where the cause of the difficulty is not readily apparent, make a thorough examination of the system from the very beginning, proceeding until the point of trouble can be determined. While experience is an important factor in pinpointing engine problems, careful study and understanding of the engine mechanism combined with good common sense will help you to rapidly become more expert at troubleshooting.

3.2.1 Troubleshooting from trouble symptom

Trouble symptom	Causes	Corrective action	Remarks
Digital display and control head are not turned on.	The battery voltage is low. (Discharging battery)	Check the electrolyte level in the battery and the specific gravity of battery liquid.	Refer to 13.2.
		Charge the battery or replace.	Refer to 13.2.
		Check the short of electric circuit.	Refer to 13.
	The battery voltage is low (Charging defect)	Check the damaged wire between alternator and battery and the tangency with both terminals.	Refer to 13.4.
		Check the tension of V belt.	Refer to 2.2.3(3).
		Check the alternator.	Refer to 13.4.
	Wiring of the control system isn't accomplished.	Connect the control system wires (+ and -) with battery.	Refer to 13.
	Disconnecting connectors	Wire each connector according to the manual.	Refer to 13.
	Contact failure of each connector terminal	Check each connector terminal and confirm the tangency.	
	Fuse burns out. (AUX POWER: 10A)	Check the fuse.	Refer to 3.2.2.

PREVIEW - YOUFIXTHIS.COM

Download full manual at youfixthis.com

3.3 Trouble code

The failure information of the following table is displayed on the TELEFLEX display, when a trouble may occur to the engine.

3.3.1 List of DTC (Diagnostic Trouble Code)

DTC	Level	Description
P0115	2	Water Temperature Sensor
P0118	2	Water temperature Too High
P0120	3	Main Throttle Position Sensor

PREVIEW - YOUFIXTHIS.COM

Blurred on purpose. The manual you buy has this page in full quality.

Download full manual at youfixthis.com

3.3.4 TELEFLEX i5501E Display "Alarm Screen Information"

HOT ENGINE	CHECK ENGINE
OVER REV	EMERGENCY STOP
OIL PRESSURE	LOW VOLTAGE
TURBO BOOST	ALTERNATOR
GEAR OIL	SEA WATER FLOW
ENG COM ERROR	LOW COOLANT
MAINENANCE	WATER IN FUEL
NET WORK	MAIN THROTTLE
PWR REDUCTION	SEC THROTTLE
NEUTRAL PROTECTION	SHUTTING DOWN

3.3.5 ECU Connector Pin Configuration

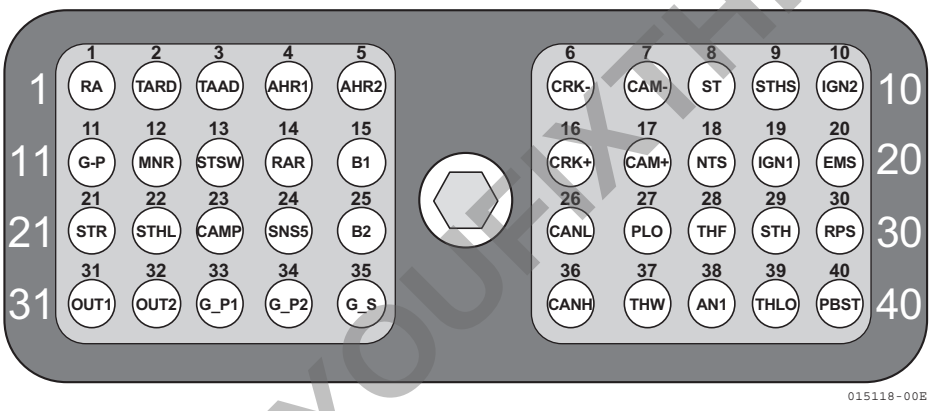

3.3.6 Abbreviation

DTC: Diagnostic Trouble Code
FMI: Failure Mode Identifier

PREVIEW - YOUFIXTHIS.COM

Download full manual at youfixthis.com

2) Install the pump bottom bracket.

N•m (kgf•m)

Tightening torque	49±5 (5.0±0.5)

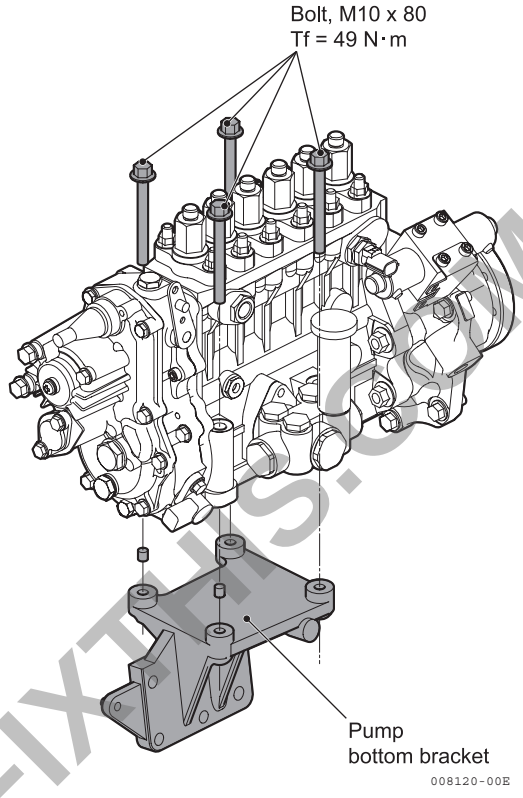

3) Tighten the pump bracket A with nuts while positioning by spring pins.

Tightening torque	25.5±3 (2.6 ± 0.3)

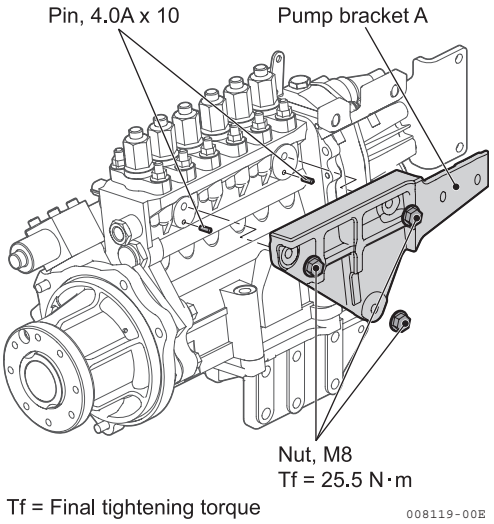

4) Apply a seal packing (liquid-packing Three Bond 1207 C) to the gear case mounting surface of the timer housing.

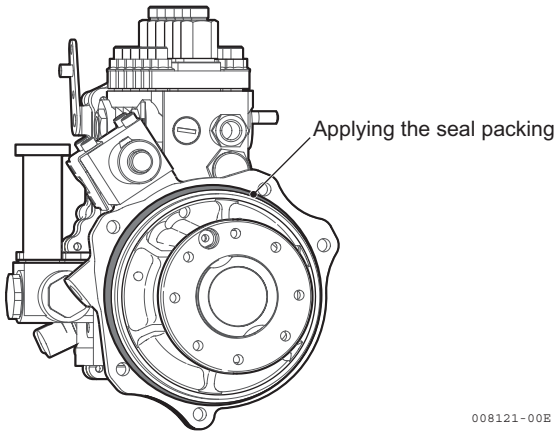

PREVIEW - YOUFIXTHIS.COM

Download full manual at youfixthis.com

Engine control system diagram

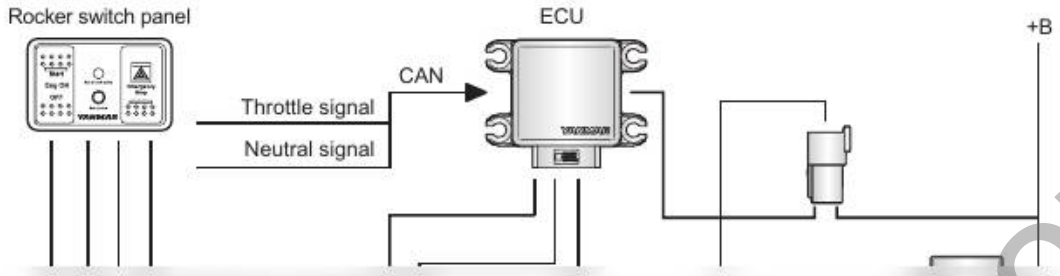

Blurred on purpose. The manual you buy has this page in full quality.

PREVIEW - YOUFIXTHIS.COM

Download full manual at youfixthis.com

13. Electrical system

13.1 Electrical system

13.1.1 Wiring diagram

For TELEFLEX digital display

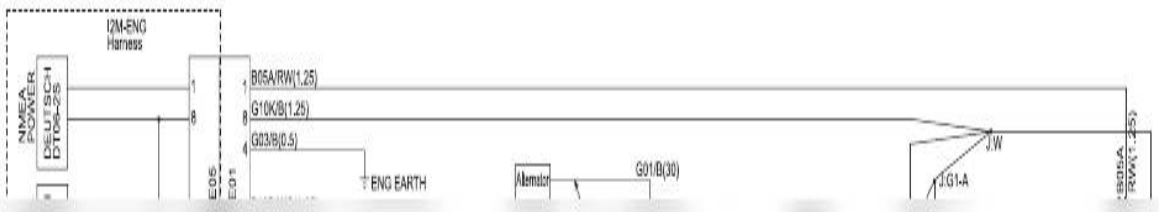

Blurred on purpose. The manual you buy has this page in full quality.

PREVIEW - YOUFIXTHIS.COM

Download full manual at youfixthis.com

15. Tightening torque for bolts and nuts

15.1 Main bolt and nut

No	Name		Thread diameter x pitch	Lubricating oil application (thread portion, and seat surface)	Torque N•m (kgf•m)
1	Head bolt	New bolt	M14 x 1. 5	Coat with lube oil	1st: 118 (12.0) 2nd: 177 (18.0) 3rd: 216-236(22.0-24.1)

PREVIEW - YOUFIXTHIS.COM

Blurred on purpose. The manual you buy has this page in full quality.

Download full manual at youfixthis.com

CONTENTS

1. General 1
1.1 Exterior views 1
1.2 Main specifications 2
1.3 Fuel oil, lubricating oil and cooling water 3
1.3.1 Fuel oil 3
1.3.2 Lubricating oil 5
1.3.3 Cooling water 7
1.4 Engine outline 8
1.5 Piping diagrams 10
1.6 Exhaust gas emission regulation 11
1.6.1 Engine identification 11
1.6.2 EPA exhaust gas emission standard 12
1.6.3 EPA guarantee conditions for emission standard 13
2. Inspection and adjustment 14
2.1 Periodic maintenance schedule 14
2.2 Periodic inspection and maintenance procedure 16
2.2.1 Check before starting 16
2.2.2 Inspection after initial 50 hours or one month operation 20
2.2.3 Inspection every 50 hours or monthly 22
2.2.4 Inspection on initial 250 hours or one year 27
2.2.5 Inspection every 250 hours or one year 33
2.2.6 Inspection every year 39
2.2.7 Inspection every 500 hours or two years 41
2.2.8 Inspection 2,000 hours or every two years 42
2.2.9 Inspection every 1,000 hours or four years 43
2.2.10 Inspection every 2000 hours or eight years 45
2.3 Adjusting the no-load minimum speed 49
2.4 Thermostat inspection 50
2.5 Test running 51
2.5.1 Preliminary precautions 51
2.5.2 Test running procedure 51
2.5.3 Check points and precautions during running 52
2.6 Long storage 53

PREVIEW - YOUFIXTHIS.COM

Download full manual at youfixthis.com

FOR SAFETY

1. SAFETY LABELS

- Most accidents are caused by negligence of basic safety rules and precautions. For accident prevention, it is important to avoid such causes before development to accidents.
  Please read this manual carefully before starting repair or maintenance to fully understand safety precautions and appropriate inspection and maintenance procedures.
  Attempting at a repair or maintenance job without sufficient knowledge may cause an unexpected accident.

Blurred on purpose. The manual you buy has this page in full quality.

PREVIEW - YOUFIXTHIS.COM

Download full manual at youfixthis.com

Blurred on purpose. The manual you buy has this page in full quality.

PREVIEW - YOUFIXTHIS.COM

Download full manual at youfixthis.com

2.2.7 Inspection every 500 hours or two years

No.	Inspection Item
(1)	Check the impeller of the seawater pump
(2)	Clean the exhaust / water mixing elbow
(3)	Adjust the tension of the alternator driving belt
(4)	Adjust the propeller shaft alignment

(1) Check the impeller of the seawater pump

Note:
The impeller must be replaced with new one periodically (every 500 hrs or 2 years, whichever comes first).

Refer to 2.2.5 for the procedure.

(2) Clean the exhaust / water mixing elbow

Replace the used mixing elbow with new one, even if any damage is not found.

(3) Adjust the tension of the alternator driving belt

Refer to 2.2.3(3) for the procedure.

(4) Adjust the propeller shaft alignment

The rubber tension of the flexible engine mounts is lost after many hours' use. This leads to a drop in vibration absorption performance, and also causes centering misalignment of the propeller shaft.

1) Check unusual noise and vibration of the engine and the boat hull with increasing the engine speed gradually and lowering it.
2) If necessary, adjust the propeller shaft alignment. (Refer to 6.4.5 "Centering the Engine" in the installation manual for pleasure boat use.)

PREVIEW - YOUFIXTHIS.COM

Download full manual at youfixthis.com

(17) P0522/1 (Lubrication Oil Pressure Too Low)

DTC	P0522/1	Lubrication Oil Pressure Too Low

<DTC detect condition>

DTC / FMI	1. Detection, 2. Judgement, 3. time to detect, 4. etc	Check Point
P0522/1	1. Key SW ON. 2. Lubrication oil pressure below standard which is related to engine speed. 20kPa @1000min-1, 200kPa @3000min^{-1}. 3. 0.5s. 4. "OIL PRESSURE" on TELEFLEX display.	Lube oil system

Fail Mode	
Limited Operation	*No limited operation*
Fail Release	Yes. When oil pressure got over normal value.
Remarks	May damage the engine if kept running with oil pressure at low condition.

<Content of trouble>

DTC / FMI	Probable cause
P0522/1	Check lube oil level.
	Check lube oil pump.
	Check lube oil system.
	Check lube oil filter.
	Check lube oil pressure sensor.

<Diagnosis procedure>
(1) Check lube oil level.
(2) Check lube oil pressure by mechanical gauge such as a bourdon pressure gauge.
(3) Check lube oil pump.
(4) Check lube oil system.
(5) Check lube oil filter.
(6) Check lube oil pressure sensor.

PREVIEW - YOUFIXTHIS.COM

Download full manual at youfixthis.com

(34) Cooling water pipes

1) Fit bend A to fresh water cooler and joint the bend and seawater pump with hose.
2) Fit bend B to intercooler and joint intercooler and fresh water cooler with hose.
3) Apply hose clamps to seawater inlet & outlet of fresh water cooler and seawater inlet & outlet of lube oil cooler.

Note:
Apply two hose clamps to each four places shown in the right and below figures to prevent

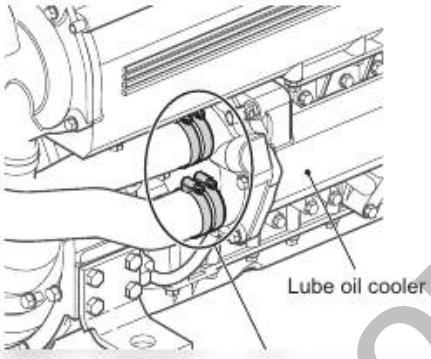

PREVIEW - YOUFIXTHIS.COM

Blurred on purpose. The manual you buy has this page in full quality.

Download full manual at youfixthis.com

9) Remove the dummy bolts.

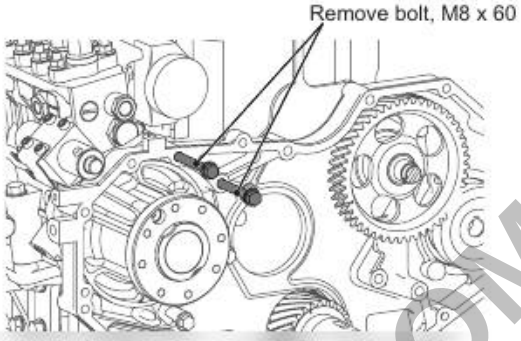

PREVIEW - YOUFIXTHIS.COM

Blurred on purpose. The manual you buy has this page in full quality.

Download full manual at youfixthis.com

No.	Name	Q'ty
1	Turbine shaft	1
2	Thrust bush	1
3	Oil thrower	1
4	Compressor-side seal ring (small)	1
5	Compressor-side seal ring (large)	1
6	Turbine-side seal ring	1
7	Shaft end nut	1
8	Compressor impeller	1
9	Floating metal	2
10	Thrust bearing	1
11	Compressor housing	1
12	Flange hexagon bolt (M8)	6
13	Turbine housing	1
14	Shroud	1
15	Turbine-side pressure plate	8
16	Hexagon bolt (M8)	8
17	Retaining ring	3
18	TORX T across-head machine screw 54 (M3)	3
19	TORX T across-head machine screw 54 (M4)	4
20	Adhesive (Locktite)	—
21	Fluid sealant	—

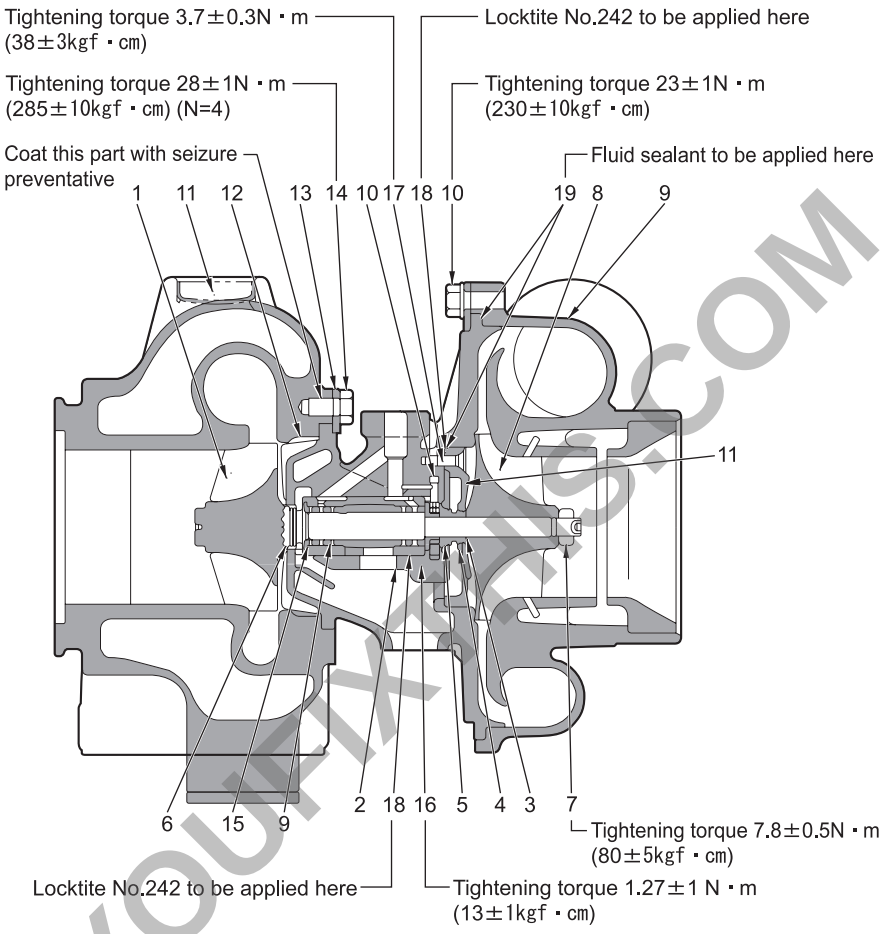

Sectional view (RHC7W turbocharger)

007191-00E

PREVIEW - YOUFIXTHIS.COM

Download full manual at youfixthis.com

PREVIEW ONLY

You're viewing 18 of 366 pages

The full manual includes:

- All 366 pages, complete
- Searchable PDF (find any keyword)
- No watermarks
- Instant download
- Print-ready quality

GET FULL MANUAL NOW

Yanmar 6LY3-ETP, 6LY3-STP, 6LY3-UTP Service Manual

Scan or click anywhere
youfixthis.com

Click anywhere on this page to get the full manual