```
1,1,,772434-03250,,"LABEL ASSY(CANOPY",1,,,,,,,,,,,,,,,,,
2,2,,172165-03141,,"LABEL,FRONT",1,,,,,,,,,,,,,,,,,
3,2,,172434-03110,,LABEL,1,,,,,,,,,,,,,,,,,
4,2,,172171-03151,,LABEL,1,,,,,,,,,,,,,,,,,
5,2,,172519-03150,,"LABEL, ACCEL",1,,,,,,,,,,,,,,,,,
6,2,,172171-03161,,LABEL,1,,,,,,,,,,,,,,,,,
7,2,,172168-03211,,LABEL,1,,,,,,,,,,,,,,,,,
8,2,,172171-03261,,"LABEL,BOOM",2,,,,,,,,,,,,,,,,,
9,2,,172183-03280,,"LABEL,LOCK",2,,,,,,,,,,,,,,,,,
10,2,,172164-03180,,"MARK,NO.1",1,,,,,,,,,,,,,,,,,
11,2,,172137-03301,,"LABEL, TURNING LOCK",1,,,,,,,,,,,,,,,,,
12,2,,172141-03360,,"LABEL, START SWITCH",1,,,,,,,,,,,,,,,,,
13,2,,172171-03400,,PLATE,1,,,,,,,,,,,,,,,,,
14,2,,124764-44920,,"LABEL, ANTI-FREEZING",1,,,,,,,,,,,,,,,,,
15,2,,172183-03450,,"LABEL,FUEL",1,,,,,,,,,,,,,,,,,
16,2,,172141-03440,,LABEL,1,,,,,,,,,,,,,,,,,
17,2,,172165-03500,,"LABEL,GREASE FEED",1,,,,,,,,,,,,,,,,,
18,2,,172171-03510,,"LABEL, GREASE",1,,,,,,,,,,,,,,,,,
19,2,,172171-03520,,"LABEL, OIL/WATER",1,,,,,,,,,,,,,,,,,
20,2,,172151-03540,,"LABEL,PATTERN A",1,,,,,,,,,,,,,,,,,
21,2,,172171-03700,,LABEL,1,,,,,,,,,,,,,,,,,
22,2,,172171-03710,,LABEL,1,,,,,,,,,,,,,,,,,
23,2,,172171-03720,,LABEL,1,,,,,,,,,,,,,,,,,
24,2,,172171-03730,,LABEL,2,,,,,,,,,,,,,,,,,
25,2,,172171-03740,,LABEL,1,,,,,,,,,,,,,,,,,
26,2,,172171-03750,,LABEL,2,,,,,,,,,,,,,,,,,
27,2,,172171-03760,,LABEL,1,,,,,,,,,,,,,,,,,
28,2,,172171-03770,,LABEL,1,,,,,,,,,,,,,,,,,
29,2,,172171-03780,,LABEL,1,,,,,,,,,,,,,,,,,
30,2,,172155-03790,,"LABEL,RE-FUELING",1,,,,,,,,,,,,,,,,,
31,2,,172171-03790,,"LABEL, RADIATOR",1,,,,,,,,,,,,,,,,,
32,2,,172171-03800,,LABEL,1,,,,,,,,,,,,,,,,,
33,2,,172171-03810,,LABEL,1,,,,,,,,,,,,,,,,,
34,2,,172125-03950,,"LABEL, AIR CLEANER",1,,,,,,,,,,,,,,,,,
35,2,,121120-44800,,"LABEL, RADIATOR",1,,,,,,,,,,,,,,,,,
36,2,,124764-44810,,"LABEL, SUB-TANK",1,,,,,,,,,,,,,,,,,
```

PREVIEW - YOUFIXTHIS.COM

Download full manual at youfixthis.com

Fig. 4 ACCELERATOR

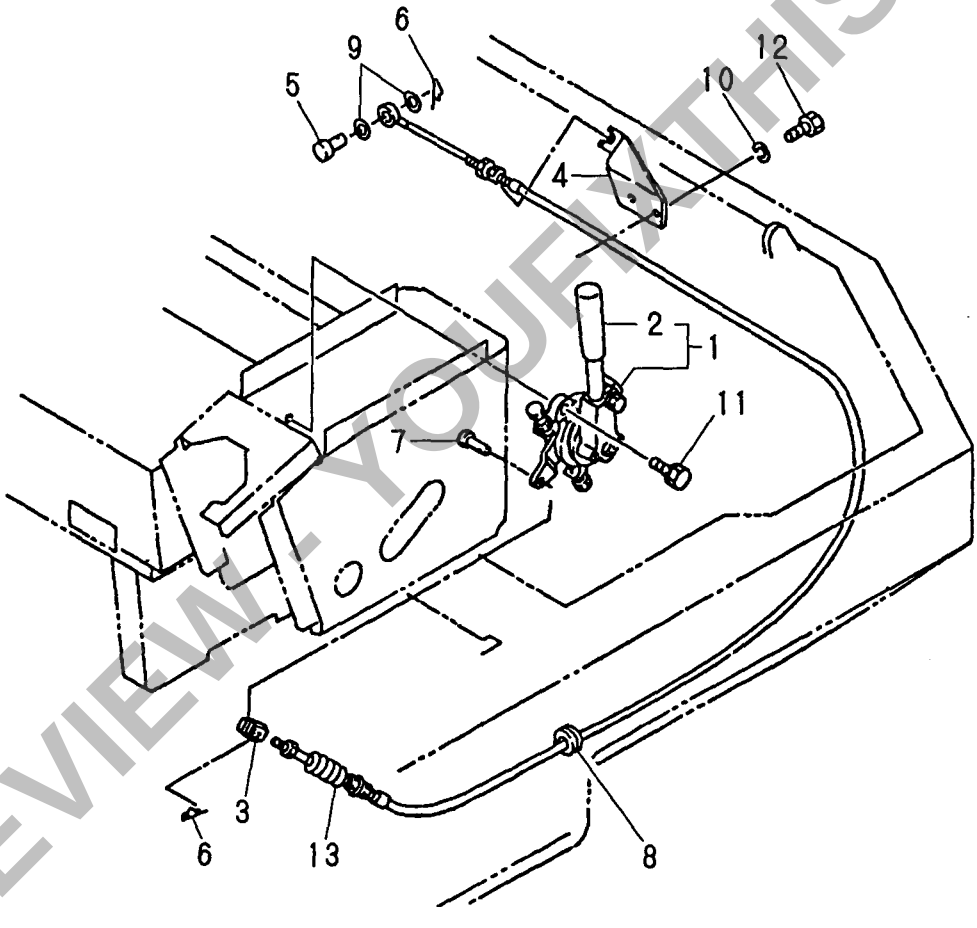

REVIEW - YOUFIXTHIS.COM

Download full manual at youfixthis.com

Fig.24 HYD.OIL PUMP & JOINT

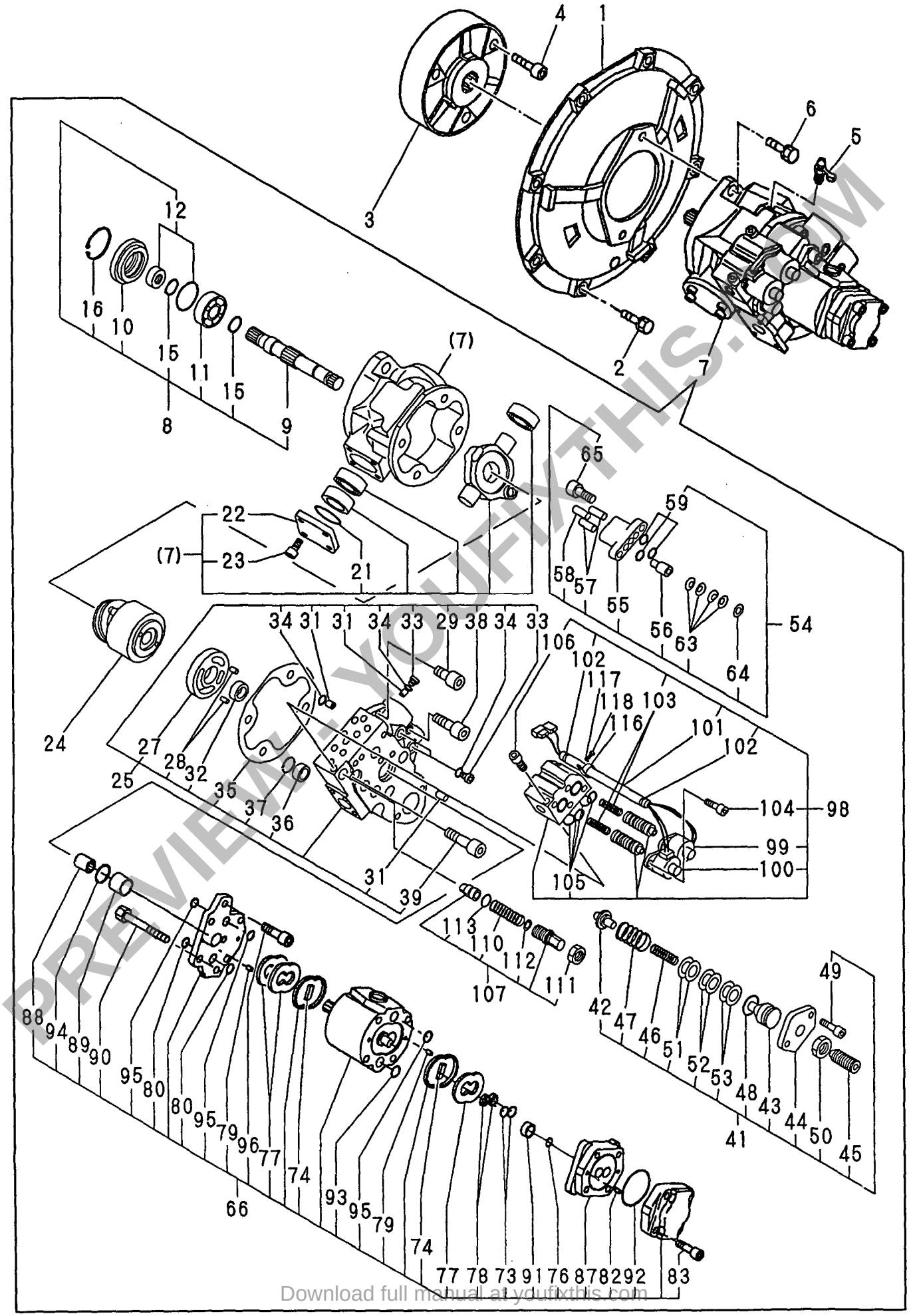

PREVIEW - YOUFIXTHIS.COM
Download full manual at youfixthis.com

```
1,1,,172212-61230,,"FASTENER, DIAL",1,,,,,,,,,,,,,,,,,
2,1,,172162-64200,,"SEAT,OPERATOR",1,,,,,,,,,,,,,,,,,
3,2,,172162-64210,,"CUSHION ASSY",1,,,,,,,,,,,,,,,,,
4,2,,172162-64220,,"BACK ASSY",1,,,,,,,,,,,,,,,,,
5,2,,172162-64230,,"BACK (B) ASSY",1,,,,,,,,,,,,,,,,,
6,2,,172162-64240,,"PANEL,BACK",1,,,,,,,,,,,,,,,,,
7,3,,172162-64320,,"RUBBER A,EDGE",1,,,,,,,,,,,,,,,,,
8,3,,172162-64330,,"RUBBER B,EDGE",1,,,,,,,,,,,,,,,,,
9,2,,172162-64250,,"BRACKET L,SIDE",1,,,,,,,,,,,,,,,,,
10,2,,172162-64260,,"BRACKET R,SIDE",1,,,,,,,,,,,,,,,,,
11,2,,172162-64270,,ADJUSTER,1,,,,,,,,,,,,,,,,,
12,2,,172162-64280,,ADJUSTER,1,,,,,,,,,,,,,,,,,
15,2,,172162-64310,,"SCREW M5X10,TAPPING",3,,,,,,,,,,,,,,,,,
16,2,,26013-080202,,"BOLT W/WASHER M8X20",8,,,,,,,,,,,,,,,,,
17,2,,26022-080162,,"SCREW M 8X 16",4,,,,,,,,,,,,,,,,,
18,1,,172165-64691,,"PLATE, SEAT",1,,,,,,,,,,,,,,,,,
19,1,,172165-64801,,"MOUNT, SEAT",1,,,,,,,,,,,,,,,,,
20,1,,172165-64601,,"COVER, MOUNT",1,,,,,,,,,,,,,,,,,
21,1,,22137-080000,,"WASHER 8, POLISHED",6,,,,,,,,,,,,,,,,,
22,1,,22217-080000,,"SPRING WASHER  8",4,,,,,,,,,,,,,,,,,
23,1,,22217-080000,,"SPRING WASHER  8",4,,,,,,,,,,,,,,,,,
24,1,,172165-63660,,CAP,1,,,,,,,,,,,,,,,,,
25,1,,26013-100202,,"BOLT W/WASHER M10X20",4,,,,,,,,,,,,,,,,,
26,1,,26013-100202,,"BOLT W/WASHER M10X20",4,,,,,,,,,,,,,,,,,
27,1,,26577-050122,,"SCREW M 5X 12",2,,,,,,,,,,,,,,,,,
28,1,,26716-050002,,"NUT M 5",2,,,,,,,,,,,,,,,,,
29,1,,26716-080002,,"NUT M 8",2,,,,,,,,,,,,,,,,,
30,1,,26716-080002,,"NUT M 8",4,,,,,,,,,,,,,,,,,
31,1,,194300-21460,,CAP,1,,,,,,,,,,,,,,,,,
32,1,,172519-63240,,"BOLT  8X 16",16,,,,,,,,,,,,,,,,,
33,1,,172165-63501,,"PANEL(R),INST(SI",1,,,,,,,,,,,,,,,,,
34,1,,172165-63550,,"PANEL(L), INSTRUMENT",1,,,,,,,,,,,,,,,,,
35,1,,172165-63600,,"COVER (R)",1,,,,,,,,,,,,,,,,,
36,1,,172165-63620,,"COVER (L)",1,,,,,,,,,,,,,,,,,
37,1,,172165-63650,,"PLUG 10,HOLE",3,,,,,,,,,,,,,,,,,
38,1,,22137-040000,,"WASHER 4, POLISHED",4,,,,,,,,,,,,,,,,,
39,1,,26716-040002,,"NUT M 4",4,,,,,,,,,,,,,,,,,
40,1,,172165-64770,,NUT,2,,,,,,,,,,,,,,,,,
```

PREVIEW - YOUFIXTHIS.COM

Download full manual at youfixthis.com

```
1,1,,172141-37501,,PLATE,4,,,,,,,,,,,,,,,,,
2,1,,26013-100302,,"BOLT M10X 30",8,,,,,,,,,,,,,,,,,
3,1,,172141-50103,,"FRAME ASSY, LOWER",1,,,,,,,,,,,,,,,,,
4,1,,172141-50750,,"COVER, MOTOR",2,,,,,,,,,,,,,,,,,
5,1,,172141-50762-1,,"COVER, UNDER",1,,,,,,,,,,,,,,,,,
6,1,,172141-50890,,GROMMET,2,,,,,,,,,,,,,,,,,
7,1,,22217-100000,,"SPRING WASHER 10",6,,,,,,,,,,,,,,,,,
8,1,,22217-120000,,"SPRING WASHER",4,,,,,,,,,,,,,,,,,
9,1,,26116-100202,,"BOLT M10X 20 PLATED",6,,,,,,,,,,,,,,,,,
10,1,,26116-120252,,"BOLT M12X 25 PLATED",4,,,,,,,,,,,,,,,,,
11,1,,172730-05250,,"WASHER 12",12,,,,,,,,,,,,,,,,,
12,1,,172141-50901,,"GUARD, SHOE",4,,,,,,,,,,,,,,,,,
13,1,,26013-120452,,"BOLT M12X 45",12,,,,,,,,,,,,,,,,,
14,1,,172730-05250,,"WASHER 12",9,,,,,,,,,,,,,,,,,
15,1,,172131-37170,,"BOLT M12X 30",7,,,,,,,,,,,,,,,,,
16,1,,172168-53300,,"WEIGHT L",1,,,,,,,,,,,,,,,,,
17,1,,172171-53310,,"WEIGHT,CENTER",1,,,,,,,,,,,,,,,,,
18,1,,172171-53340,,"WEIGHT,SIDE(L)",1,,,,,,,,,,,,,,,,,
19,1,,172141-53350,,"GROMMET 26",6,,,,,,,,,,,,,,,,,
20,1,,172168-53350,,"WEIGHT R",1,,,,,,,,,,,,,,,,,
21,1,,172171-53350,,"WEIGHT,SIDE(R)",1,,,,,,,,,,,,,,,,,
22,1,,172168-53450,,"BOLT 12X70",2,,,,,,,,,,,,,,,,,
23,1,,22217-120000,,"SPRING WASHER",11,,,,,,,,,,,,,,,,,
24,1,,26116-120552,,"BOLT M12X 55 PLATED",2,,,,,,,,,,,,,,,,,
25,1,,172171-54102-4,,"FRAME,TURNING(GREEN",1,,,,,,,,,,,,,,,,,
26,2,,172171-54750,,"BUSH 50X65",2,,,,,,,,,,,,,,,,,
27,2,,172165-81760,,"SEAL 50X60X4, DUST",2,,,,,,,,,,,,,,,,,
28,1,,24761-040000,,"NIPPLE B,GREASE",1,,,,,,,,,,,,,,,,,
29,1,,194940-24350,,"PIN 10X28,STRAIGHT",4,,,,,,,,,,,,,,,,,
30,1,,172141-57601,,"BEARING, SWING",1,,,,,,,,,,,,,,,,,
31,2,,172141-57610,,"SEAL KIT",1,,,,,,,,,,,,,,,,,
32,3,,172141-57620,,"SEAL, UPPER",1,,,,,,,,,,,,,,,,,
33,3,,172141-57630,,"SEAL,LOWER",1,,,,,,,,,,,,,,,,,
34,1,,172141-57650,,"BOLT M12X 55 PLATED",38,,,,,,,,,,,,,,,,,
```

PREVIEW - YOUFIXTHIS.COM

Download full manual at youfixthis.com

Fig.48 GREASING

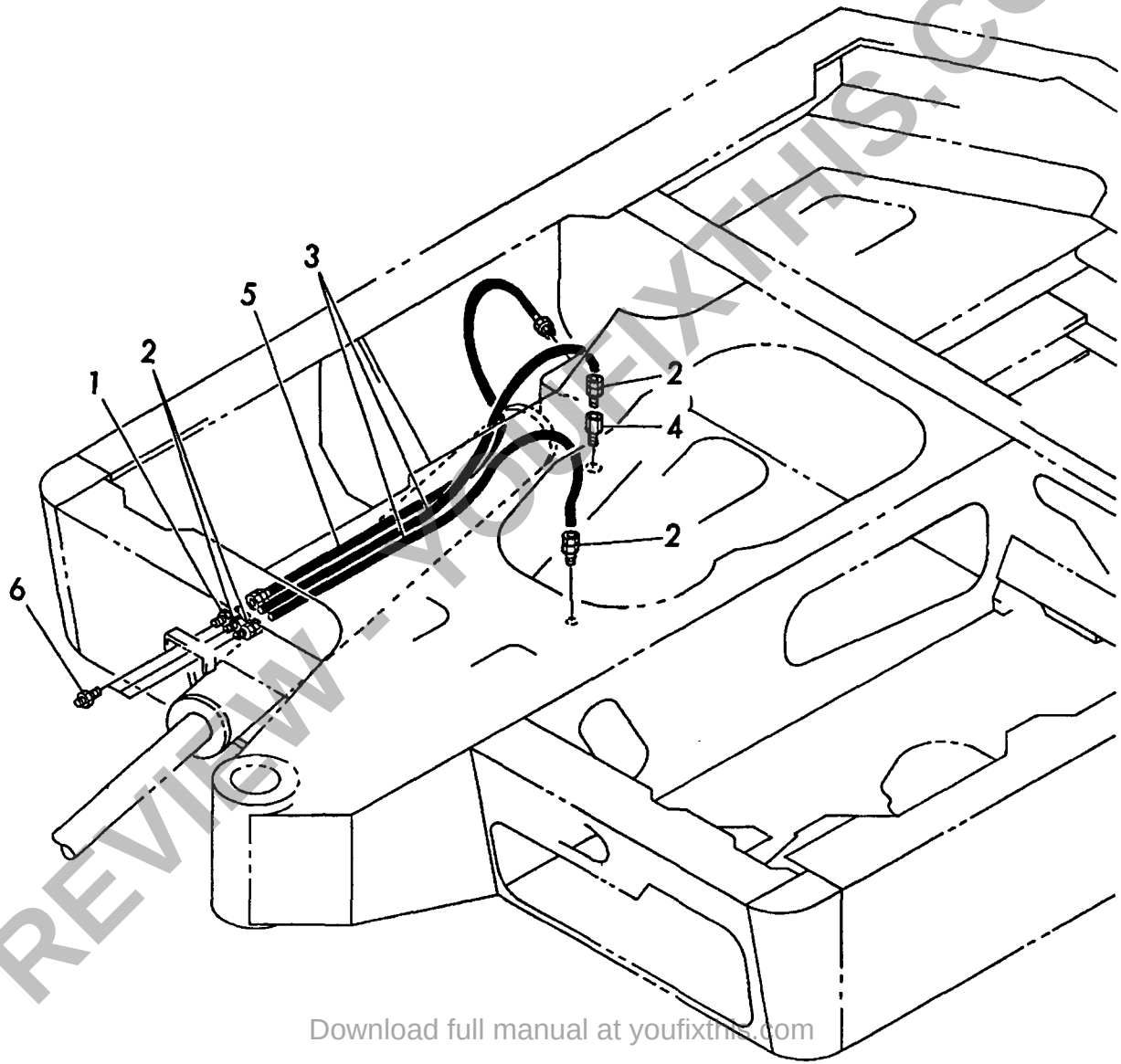

PREVIEW - YOUFIXTHIS.COM

Download full manual at youfixthis.com

PICTURESQUE INDEX(1)···MAIN PARTS

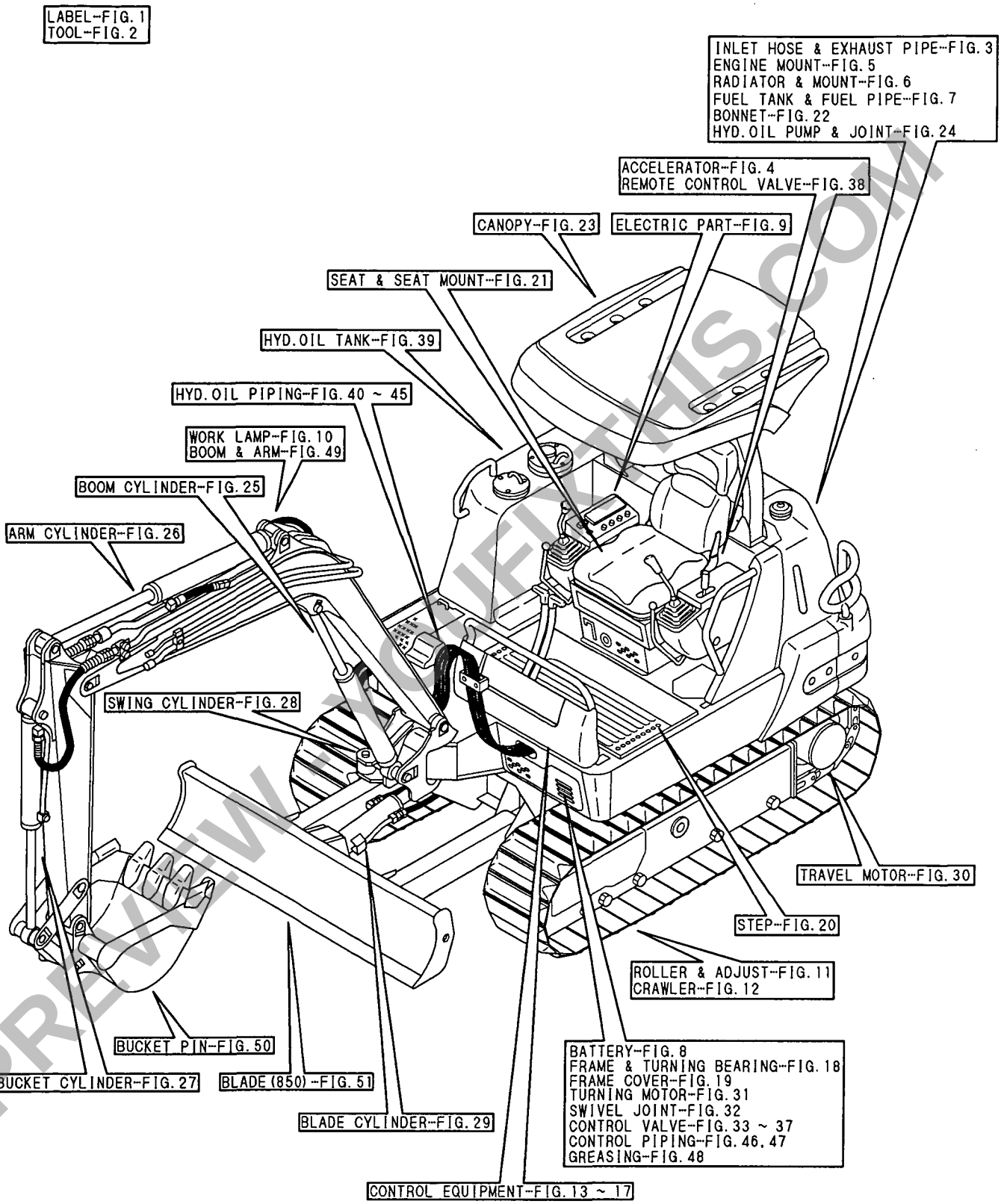

PREVIEW YOUFIXTHIS.COM

Download full manual at youfixthis.com

```
1,1,,172171-13300,,"MOUNT(R), RADIATOR",1,,,,,,,,,,,,,,,,,
2,1,,172122-13310,,"MOUNT, RADIATOR",4,,,,,,,,,,,,,,,,,
3,1,,172171-13330,,"PLATE, RADIATOR",1,,,,,,,,,,,,,,,,,
4,1,,172171-13340,,"MOUNT L CMP,RADIATOR",1,,,,,,,,,,,,,,,,,,
5,1,,172171-13410,,BRACKET,1,,,,,,,,,,,,,,,,,
6,1,,172124-14650,,"HOSE L=1100, FUEL",1,,,,,,,,,,,,,,,,,
7,1,,172171-13461,,"HOSE 7.5X13",1,,,,,,,,,,,,,,,,,
8,1,,121468-44510,,"SUB-TANK ASSY",1,,,,,,,,,,,,,,,,,
9,2,,121470-44521,,"BODY,SUB-TANK",1,,,,,,,,,,,,,,,,,
10,2,,121450-44531,,CAP,1,,,,,,,,,,,,,,,,,
11,2,,121468-44540,,"PLUG, SUB-TANK",1,,,,,,,,,,,,,,,,,
12,2,,124450-44560,,CLAMP,1,,,,,,,,,,,,,,,,,
13,2,,121470-44581,,GASKET,1,,,,,,,,,,,,,,,,,
14,2,,23065-070130,,"PIPE  7X 130",1,,,,,,,,,,,,,,,,,
15,1,,121470-44540,,"LABEL, SUB-TANK",1,,,,,,,,,,,,,,,,,
16,1,,119831-44551,,RADIATOR,1,,,,,,,,,,,,,,,,,
17,2,,124450-44590,,"CAP, RADIATOR",1,,,,,,,,,,,,,,,,,
18,1,,119831-44571,,"NET, WIRE",1,,,,,,,,,,,,,,,,,
19,1,,119831-49010,,"PIPE (A), C. WATER",1,,,,,,,,,,,,,,,,,
20,1,,119831-49020,,PIPE(B)C.WATER,1,,,,,,,,,,,,,,,,,
21,1,,121450-49110,,"COCK ASSY, 3-WAY",1,,,,,,,,,,,,,,,,,
23,2,,121250-49121,,PLUG,1,,,,,,,,,,,,,,,,,
24,2,,24311-000160,,"O-RING 1A P-16.0",1,,,,,,,,,,,,,,,,,
25,1,,124766-59050,,"CLAMP 12",4,,,,,,,,,,,,,,,,,
26,1,,22137-060000,,"WASHER 6, POLISHED",2,,,,,,,,,,,,,,,,,
27,1,,22137-080000,,"WASHER 8, POLISHED",2,,,,,,,,,,,,,,,,,
28,1,,23010-038000,,"CLAMP 38",4,,,,,,,,,,,,,,,,,
29,1,,26013-060202,,"BOLT M 6X 20",2,,,,,,,,,,,,,,,,,
30,1,,26013-080162,,"BOLT W/WASHER M8X16",4,,,,,,,,,,,,,,,,,
31,1,,26013-080162,,"BOLT W/WASHER M8X16",2,,,,,,,,,,,,,,,,,
32,1,,26013-100202,,"BOLT W/WASHER M10X20",4,,,,,,,,,,,,,,,,,,
33,1,,26013-080162,,"BOLT W/WASHER M8X16",2,,,,,,,,,,,,,,,,,
34,1,,26051-080002,,"NUT M 8",8,,,,,,,,,,,,,,,,,
35,1,,933168-55770,,"BAND 146",1,,,,,,,,,,,,,,,,,
36,1,,121250-44590,,CLAMP,2,,,,,,,,,,,,,,,,,
37,1,,1A1380-58050,,"GROMMET 16X20X4.5",2,,,,,,,,,,,,,,,,,
38,1,,933152-09280,,"BAND 170",1,,,,,,,,,,,,,,,,,
```

PREVIEW - YOUFIXTHIS.COM

Download full manual at youfixthis.com

```
1,1,,1A1040-45890,,"WASHER 10 36 4.5",1,,,,,,,,,,,,,,,,,
2,1,,172124-46200,,"O-RING 27X5.7",2,,,,,,,,,,,,,,,,,
3,1,,172165-46301,,"LINK W/BUSH",1,,,,,,,,,,,,,,,,,
5,2,,172141-41360,,"BUSH 1415",2,,,,,,,,,,,,,,,,,
6,1,,172165-46350,,"BRACKET, PEDAL",1,,,,,,,,,,,,,,,,,
7,1,,172146-41910,,"PIN 14-100",1,,,,,,,,,,,,,,,,,
8,1,,172168-46800,,"LINK W/BUSH, SWING",1,,,,,,,,,,,,,,,,,
10,2,,172141-41370,,"BUSH 2015",2,,,,,,,,,,,,,,,,,
11,1,,172168-46820,,SHAFT,1,,,,,,,,,,,,,,,,,
12,1,,24311-000210,,"O-RING 1A P-21.0",2,,,,,,,,,,,,,,,,,
13,1,,24761-020000,,"NIPPLE PT1/8,GREASE",1,,,,,,,,,,,,,,,,,
14,1,,24761-050000,,"NIPPLE C,GREASE",1,,,,,,,,,,,,,,,,,
15,1,,26051-080002,,"NUT M 8",7,,,,,,,,,,,,,,,,,
16,1,,26013-100202,,"BOLT W/WASHER M10X20",2,,,,,,,,,,,,,,,,,
17,1,,26013-100252,,"BOLT W/WASHER M10X25",2,,,,,,,,,,,,,,,,,
18,1,,26116-100202,,"BOLT M10X 20 PLATED",1,,,,,,,,,,,,,,,,,
19,1,,172068-28490,,"SPRING  8",4,,,,,,,,,,,,,,,,,
20,1,,172157-45990,,"BOOTS, PEDAL",1,,,,,,,,,,,,,,,,,
21,1,,172165-46230,,"SHAFT, SWING",2,,,,,,,,,,,,,,,,,
22,1,,172165-46261,,"COVER, PEDAL",2,,,,,,,,,,,,,,,,,
23,1,,172165-46281,,"PEDAL ASSY, SWING",1,,,,,,,,,,,,,,,,,
24,1,,172165-46340,,BOLT,2,,,,,,,,,,,,,,,,,
25,1,,22137-080000,,"WASHER 8, POLISHED",2,,,,,,,,,,,,,,,,,
26,1,,22351-040020,,"SPRING PIN 4X20",2,,,,,,,,,,,,,,,,,
27,1,,26116-080304,,"BOLT M8 X 30 PLATED",2,,,,,,,,,,,,,,,,,
28,1,,26716-080002,,"NUT M 8",2,,,,,,,,,,,,,,,,,
29,1,,26716-080002,,"NUT M 8",4,,,,,,,,,,,,,,,,,
30,1,,172122-46590,,"ELBALL 8",3,,,,,,,,,,,,,,,,,
31,1,,172168-46840,,"ROD 240",1,,,,,,,,,,,,,,,,,
32,1,,172168-46860,,"ROD 100",1,,,,,,,,,,,,,,,,,
33,1,,172122-47250,,"BALL 8, LINK",1,,,,,,,,,,,,,,,,,
34,1,,22137-080000,,"WASHER 8, POLISHED",4,,,,,,,,,,,,,,,,,
35,1,,22217-100000,,"SPRING WASHER 10",1,,,,,,,,,,,,,,,,,
36,1,,22351-040032,,"SPRING PIN 4X32",1,,,,,,,,,,,,,,,,,
```

PREVIEW - YOUFIXTHIS.COM

Download full manual at youfixthis.com

```
1,1,,172168-71101,,"COVER,FLYWHEEL",1,,,,,,,,,,,,,,,,,
2,1,,26013-100302,,"BOLT M10X 30",8,,,,,,,,,,,,,,,,,
3,1,,172165-71200,,COUPLING,1,,,,,,,,,,,,,,,,,
4,1,,26450-120402,,"BOLT M12X 40",3,,,,,,,,,,,,,,,,,
5,1,,172164-73110,,VALVE,1,,,,,,,,,,,,,,,,,
6,1,,26013-120352,,"BOLT M12X 35",2,,,,,,,,,,,,,,,,,
7,1,,172171-73212,,"PUMP ASSY, 4-THROW",1,,,,,,,,,,,,,,,,,
8,2,,172168-71200,,"SHAFT ASSY, ROCKER",1,,,,,,,,,,,,,,,,,
9,3,,172168-71310,,SHAFT,1,,,,,,,,,,,,,,,,,
10,3,,172168-71320,,"SEAL CASE",1,,,,,,,,,,,,,,,,,
11,3,,172168-71330,,BEARING,1,,,,,,,,,,,,,,,,,
12,3,,172164-73170,,"SEAL ASSY",1,,,,,,,,,,,,,,,,,
15,3,,22242-000250,,"CIRCLIP 25S",2,,,,,,,,,,,,,,,,,
16,3,,22252-000620,,"CIRCLIP 62(H)",1,,,,,,,,,,,,,,,,,
21,2,,172168-71340,,O-RING,1,,,,,,,,,,,,,,,,,
22,2,,172168-71550,,COVER,1,,,,,,,,,,,,,,,,,
23,2,,26450-060162,,"BOLT M 6X 16",4,,,,,,,,,,,,,,,,,
24,2,,172175-73111,,"ROTARY COMP.",1,,,,,,,,,,,,,,,,,
25,2,,172164-73410,,"COVER, AIR CLEANER",1,,,,,,,,,,,,,,,,,
27,3,,172175-73150,,"PLATE, CONTROL",1,,,,,,,,,,,,,,,,,
28,3,,22312-060140,,"PARALLEL PIN 6X14",2,,,,,,,,,,,,,,,,,
29,3,,26450-100302,,"BOLT M10X 30",3,,,,,,,,,,,,,,,,,
31,3,,172165-73580,,ORIFICE,3,,,,,,,,,,,,,,,,,
32,3,,172168-71560,,BEARING,1,,,,,,,,,,,,,,,,,
33,3,,172142-74650,,"PLUG 1/8",4,,,,,,,,,,,,,,,,,
34,3,,24315-000080,,"O-RING 1B P-8.0",5,,,,,,,,,,,,,,,,,
35,3,,172168-71360,,"GASKET, BONNET",1,,,,,,,,,,,,,,,,,
36,3,,172164-73660,,FILTER,1,,,,,,,,,,,,,,,,,
37,3,,172164-73670,,CIRCLIP,1,,,,,,,,,,,,,,,,,
38,3,,26450-100502,,"BOLT 10X 50",1,,,,,,,,,,,,,,,,,
39,3,,26450-100552,,"BOLT M10X 55",1,,,,,,,,,,,,,,,,,
41,2,,172168-73220,,SPRING,1,,,,,,,,,,,,,,,,,
42,3,,172168-71380,,RETAINER,1,,,,,,,,,,,,,,,,,
43,3,,172168-71390,,RETAINER,1,,,,,,,,,,,,,,,,,
44,3,,172164-73720,,COVER,1,,,,,,,,,,,,,,,,,
45,3,,172165-73640,,"ADJUST SCREW",1,,,,,,,,,,,,,,,,,
46,3,,172175-73450,,SPRING,1,,,,,,,,,,,,,,,,,
47,3,,172168-73230,,SPRING,1,,,,,,,,,,,,,,,,,
48,3,,172168-71430,,O-RING,1,,,,,,,,,,,,,,,,,
49,3,,26450-080302,,"BOLT M 8X 30",2,,,,,,,,,,,,,,,,,
50,3,,172165-73670,,"NUT M 6",1,,,,,,,,,,,,,,,,,
51,3,,172168-71440,,SHIM,2,,,,,,,,,,,,,,,,,
52,3,,172168-71450,,SHIM,2,,,,,,,,,,,,,,,,,
53,3,,172168-71460,,SHIM,2,,,,,,,,,,,,,,,,,
54,2,,172171-73230,,"PISTON ASSY, CONTROL",1,,,,,,,,,,,,,,,,,
55,3,,172168-71470,,CYLINDER,1,,,,,,,,,,,,,,,,,
56,3,,172171-73270,,PISTON,1,,,,,,,,,,,,,,,,,
57,3,,172168-71490,,"PARALLEL PIN",2,,,,,,,,,,,,,,,,,
58,3,,172168-71500,,"PARALLEL PIN",1,,,,,,,,,,,,,,,,,
59,3,,172164-73220,,"O-RING ASSY",1,,,,,,,,,,,,,,,,,
63,3,,172168-71520,,"CONICAL SPRING",4,,,,,,,,,,,,,,,,,
64,3,,172168-71530,,RETAINER,1,,,,,,,,,,,,,,,,,
65,3,,26450-080252,,"BOLT M 8X 25",2,,,,,,,,,,,,,,,,,
66,2,,172175-73440,,"PUMP ASSY, GEAR",1,,,,,,,,,,,,,,,,,
73,3,,172141-71550,,O-RING,2,,,,,,,,,,,,,,,,,
74,3,,172141-71560,,RING,2,,,,,,,,,,,,,,,,,
76,3,,172141-73210,,CIRCLIP,1,,,,,,,,,,,,,,,,,
77,3,,172141-73220,,PLATE,3,,,,,,,,,,,,,,,,,
78,3,,172141-73230,,GUIDE,2,,,,,,,,,,,,,,,,,
79,3,,172141-73240,,"PIN, PARALLEL",4,,,,,,,,,,,,,,,,,
80,3,,172147-73650,,O-RING,2,,,,,,,,,,,,,,,,,
82,3,,172141-73240,,"PIN, PARALLEL",1,,,,,,,,,,,,,,,,,
83,3,,26450-080402,,"BOLT 8X40",4,,,,,,,,,,,,,,,,,
```

PREVIEW - YOUFIXTHIS.COM

Download full manual at youfixthis.com

```
1,1,,172168-45400,,"PLATE ASSY, LINK",1,,,,,,,,,,,,,,,,,
2,1,,172165-45490,,CUSHION,5,,,,,,,,,,,,,,,,,
3,1,,22252-000280,,"CIRCLIP   28",5,,,,,,,,,,,,,,,,,
4,1,,26106-100352,,"BOLT M10X 35 PLATED",5,,,,,,,,,,,,,,,,,
5,1,,26013-100302,,"BOLT M10X 30",3,,,,,,,,,,,,,,,,,
6,1,,26716-100002,,"NUT 10",1,,,,,,,,,,,,,,,,,
7,1,,172171-74101,,"VALVE,CONTROL",1,,,,,,,1,,,,,,,,,,
8,2,,172168-72620,,"SECTION ASSY.,SPACER",1,,,,,,,,,,,,,,,,,
9,3,,172122-73430,,PLUG,1,,,,,,,,,,,,,,,,,
10,3,,172142-74900,,SPACER,1,,,,,,,,,,,,,,,,,
11,2,,172171-72630,,"VALVE 175/25,RELIEF",2,,,,,,,,,,,,,,,,,
12,3,,172116-74150,,O-RING,2,,,,,,,,,,,,,,,,,
13,2,,172171-72640,,"VALVE 160/24,RELIEF",1,,,,,,,,,,,,,,,,,
14,3,,172116-74150,,O-RING,1,,,,,,,,,,,,,,,,,
15,2,,172168-72740,,"PLUG ASSY",1,,,,,,,,,,,,,,,,,
16,2,,172151-74110,,TIE-ROD,2,,,,,,,,,,,,,,,,,
17,2,,172151-74120,,TIE-ROD,1,,,,,,,,,,,,,,,,,
18,2,,172175-74270,,"PLUG ASSY",3,,,,,,,,,,,,,,,,,
19,3,,172112-06480,,PLUG,3,,,,,,,,,,,,,,,,,
20,3,,172112-06490,,O-RING,3,,,,,,,,,,,,,,,,,
21,2,,172175-74350,,"PLUG ASSY",3,,,,,,,,,,,,,,,,,
22,3,,172116-74150,,O-RING,3,,,,,,,,,,,,,,,,,
23,3,,172116-74320,,PLUG,3,,,,,,,,,,,,,,,,,
24,2,,172122-74520,,"SECTION, INLET",2,,,,,,,,,,,,,,,,,
25,3,,172823-74270,,"INLET HOUSING",2,,,,,,,,,,,,,,,,,
26,3,,933171-80590,,O-RING,2,,,,,,,,,,,,,,,,,
27,2,,172146-74680,,"SECTION ASSY, SPACER",1,,,,,,,,,,,,,,,,,
28,3,,172122-73430,,PLUG,1,,,,,,,,,,,,,,,,,
29,3,,172146-74750,,SPACER,1,,,,,,,,,,,,,,,,,
30,3,,23871-030000,,"PLUG PT3/8,SCREW",1,,,,,,,,,,,,,,,,,
31,3,,933171-80590,,O-RING,1,,,,,,,,,,,,,,,,,
32,2,,26716-080002,,"NUT M 8",4,,,,,,,,,,,,,,,,,
33,2,,26716-100002,,"NUT 10",2,,,,,,,,,,,,,,,,,
```

PREVIEW - YOUFIXTHIS.COM

Download full manual at youfixthis.com

```
1,1,,172168-76130,,"CONNECTOR UN3/4PF3/8",2,,,,,,,,,,,,,,,,,,
2,2,,933152-24120,,"O-RING (B)",2,,,,,,,,,,,,,,,,,,
3,1,,172312-76220,,"CONNECTOR 1/4-3/4UN",3,,,,,,,,,,,,,,,,,,
4,1,,23391-020000,,"JOINT RGI1/4",2,,,,,,,,,,,,,,,,,,
5,1,,23393-020000,,"JOINT 90RGI1/4",2,,,,,,,,,,,,,,,,,,
6,1,,23393-030000,,"JOINT 90RGI 3/8",4,,,,,,,,,,,,,,,,,,
7,1,,933152-24120,,"O-RING (B)",2,,,,,,,,,,,,,,,,,,
8,1,,933152-24120,,"O-RING (B)",3,,,,,,,,,,,,,,,,,,
9,1,,933155-08481,,"CONNECTOR (A)",2,,,,,,,,,,,,,,,,,,
10,1,,172434-78190,,HOSE,1,,,,,,,,,,,,,,,,,,
11,1,,172434-78100,,HOSE,1,,,,,,,,,,,,,,,,,,
12,1,,172434-78120,,HOSE,1,,,,,,,,,,,,,,,,,,
13,1,,172434-78180,,HOSE,2,,,,,,,,,,,,,,,,,,
14,1,,172434-78130,,HOSE,1,,,,,,,,,,,,,,,,,,
15,1,,172434-78140,,HOSE,1,,,,,,,,,,,,,,,,,,
16,1,,172434-78160,,HOSE,1,,,,,,,,,,,,,,,,,,
17,1,,172168-76140,,"CONNECTOR UN3/4PF1/4",1,,,,,,,,,,,,,,,,,,
18,2,,933152-24120,,"O-RING (B)",1,,,,,,,,,,,,,,,,,,
```

PREVIEW - YOUFIXTHIS.COM

Download full manual at youfixthis.com

PREVIEW ONLY

You're viewing 12 of 118 pages

The full manual includes:

- All 118 pages, complete
- Searchable PDF (find any keyword)
- No watermarks
- Instant download
- Print-ready quality

GET FULL MANUAL NOW

Yanmar B22-2B, 3TNE78A - B1 Parts Catalog

Scan or click anywhere
youfixthis.com

Click anywhere on this page to get the full manual