YANMAR

PARTS CATALOG

PREVIEW - YOUFIXTHIS.COM

0CS10-M52103EN

Last update Dec., 2017

Download full manual at youfixthis.com

Contents

Fig. No. Fig. Name

LABEL & ACCESSORY

1. LABEL(VARIABLE LEG : LINK TYPE)(TO MAF000)
82. (1A)LABEL(VARIABLE LEG : LINK TYPE)(FROM MAF001)
77. (1B)LABEL(VARIABLE LEG : SLIDE TYPE)(TO MAF000)
83. (1C)LABEL(VARIABLE LEG : SLIDE TYPE)(FROM MAF001)
2. LABEL(KR)(TO MAF000)
84. (2A)LABEL(KR)(FROM MAF001)
3. LABEL(SAFETY)
4. ACCESSORY

ENGINE RELATED

5. MUFFLER & AIR CLEANER
6. ACCELERATOR
7. ENGINE MOUNT(US, AS : TO M18847, KR : TO M14655)
68. (7A)ENGINE MOUNT(US, AS : FROM M18848, KR : FROM M14656)
8. RADIATOR & MOUNT
9. FUEL TANK
10. FUEL PIPING

ELECTRICAL PARTS

11. BATTERY
12. WIRING
13. EQUIPMENT

Fig. No. Fig. Name

TRAVELING

14. SPROCKET & TRACK ROLLER(Y SPEC.)
75. (14A)TRACK ROLLER(S SPEC.)
15. IDLER, CRAWLER ADJUST & CRAWLER

CONTROL EQUIPMENT

16. LINK STAND
17. STOPPER
18. OPERATION LEVER(RIGHT)
19. OPERATION LEVER(RIGHT)(KR)
20. OPERATION LEVER(LEFT)
21. OPERATION LEVER(LEFT)(KR)
22. TRAVEL LEVER & BLADE LEVER
23. TRAVEL LEVER & BLADE LEVER(KR)
24. LINK
25. SWING PEDAL
26. P.T.O. PEDAL
27. VARIABLE LEG LEVER

FRAME

28. TRAVEL FRAME(VARIABLE LEG : LINK TYPE)
29. TRAVEL FRAME(VARIABLE LEG : SLIDE TYPE)(KR)
78. (29A)TRAVEL FRAME(VARIABLE LEG : SLIDE TYPE)(AS, NZ)
30. TURNING FRAME & TURNING BEARING

PREVIEW - YOUFIXTHIS.COM

Download full manual at youfixthis.com

PREFACE

1. This Parts Catalog carries Yanmar excavator (crawler back-hoe) SV08-1A for U.S.A., Australia, Korea, New Zealand, South Africa & Hong Kong.
(M/# 14001～)

2. Parts catalog history

		Model	Published	Remarks
1st edition	Vehicle	SV08-1A(US,AS,KR)	Feb.,2008	Disuse old edition
	Engine	2TE67L-BV3		
1st revised	Vehicle	SV08-1A(US,AS,KR)	Jul.,2014	Disuse old edition
	Engine	2TE67L-BV3		
2nd revised	Vehicle	SV08-1A(US,AS,KR,NZ)	Mar.,2016	Disuse old edition
	Engine	2TE67L-BV3		
3rd revised	Vehicle	SV08-1A(US,AS,KR,NZ,SA,HK)	Dec.,2017	
	Engine	2TE67L-BV3		

3. Your understanding is asking that this parts catalog is not a technical data manual setting forth as servicing procedures, This parts catalog is using simplified illustration.
Be sure to use Yanmar Genuine Parts in your maintenance servicing of Yanmar products.
Be careful not to use the simple parts available in the market, otherwise their use in repairing causes such as an early breakage, for instance.

PREVIEW - YOUFIXTHIS.COM

Download full manual at youfixthis.com

Fig.1. LABEL(VARIABLE LEG : LINK TYPE)(TO MAF000)

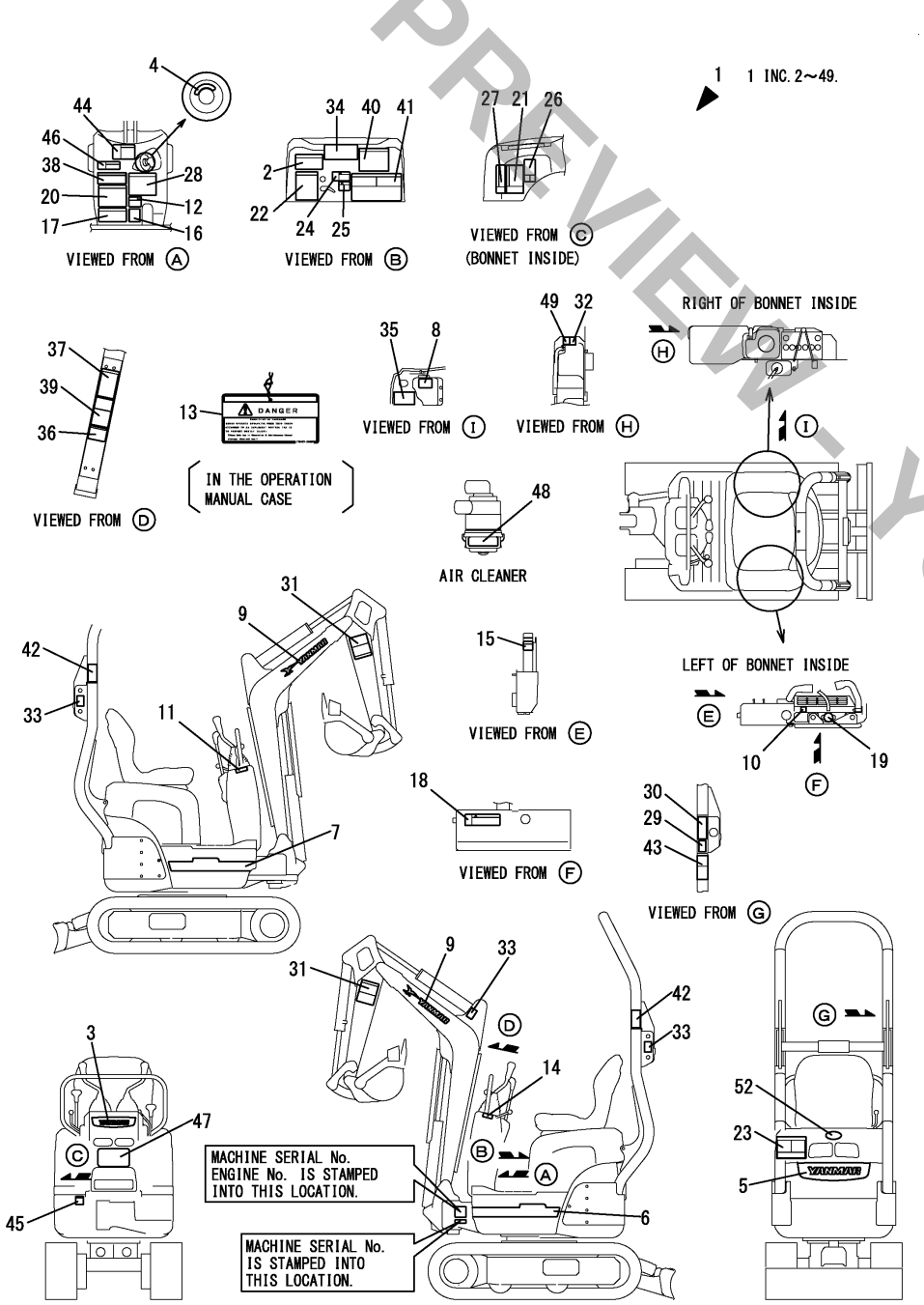

(A)=SV08-1A(US) (D)=SV08-1A(NZ)
(B)=SV08-1A(AS) (E)=SV08-1A(SA)
(C)=SV08-1A(KR) (F)=SV08-1A(HK)

No.	Lev.	Parts No.	Description	Q'ty (A)	(B)	(C)	(D)	(E)	(F)	I	R
1	1	172A82-03060	SET,LABEL SV08-1A US	1	1						
1-1	1	172A82-03061	LABEL KIT,SV08-1A UY	1	1		1			S	
	(A=M17001)	(B=M17001)									
2	2	172472-03141	LABEL, SUPPORT	1	1		1				
3	2	172446-03160	LABEL	1	1						
3-1	2	172A82-03160	LABEL,FRONT EMBLEM	1	1		1			S	
	(A=M17001)	(B=M17001)									
4	2	172A64-03700	LABEL, START SWITCH	1	1		1				
5	2	172446-03170	LABEL	1	1						
5-1	2	172A82-03170	LABEL,REAR EMBLEM	1	1		1			S	
	(A=M17001)	(B=M17001)									
6	2	172A29-03180	LABEL,S.STRIPE L	1	1						
6-1	2	172A82-03180	LABEL,SIDE L	1	1		1			S	
	(A=M17001)	(B=M17001)									
7	2	172A29-03190	LABEL,S.STRIPE R	1	1						
7-1	2	172A82-03190	LABEL,SIDE R	1	1		1			S	
	(A=M17001)	(B=M17001)									
8	2	172A38-03201	LABEL, SUB TANK	1	1		1				
9	2	172A55-03310	LABEL, BRAND 450	2	2						
9-1	2	172A86-03310	LABEL,YANMAR	2	2		2			S	
	(A=M17001)	(B=M17001)									
10	2	172A38-03211	LABEL, ANTI-FREEZING	1	1		1				
11	2	172446-03240	LABEL	1	1		1				
12	2	172433-03251	LABEL, SWING LOCK US	1	1		1				
13	2	172437-03252	TAG ASSY, CAUTION	1	1		1				
14	2	172183-03280	LABEL, LOCK	1	1		1				
15	2	172463-03290	LABEL, HYD.OIL	1	1		1				
16	2	172137-03300	LABEL, TURNING LOCK	1	1		1				
17	2	172437-03312	LABEL, SLOPE	1	1		1				
18	2	172437-03322	LABEL, RESERVOIR US	1	1		1				
19	2	172462-03320	LABEL, RADIATOR	1	1		1				
20	2	172437-03343	LABEL, TRANSPORT	1	1		1				
21	2	172437-03361	LABEL, BATTERY	1	1		1				
22	2	172437-03372	LABEL, NEUTRAL	1	1		1				
23	2	172437-03381	LABEL, SWING AREA	1	1						
23-1	2	172A64-03380	LABEL,SWING AREA US	1	1		1			N	
	(A=M15145)	(B=M15145)									
24	2	172437-03391	LABEL, RADIATOR	1	1		1				
25	2	172437-03402	LABEL, ENGINE COVER	1	1		1				
26	2	172A36-03411	LABEL, ENGINE ROOM	1	1		1				
27	2	172437-03422	LABEL, SILENCER	1	1		1				
28	2	172437-03432	LABEL, STEERING	1	1		1				
29	2	172437-03441	LABEL, ROPS	1	1		1				
30	2	172437-03451	LABEL, SEAT BELT	1	1		1				
31	2	172437-03461	LABEL, BOOM	2	2		2				
32	2	172437-03501	LABEL, FUEL	1	1		1				
33	2	172437-03511	LABEL, HOOK	3	3		3				
34	2	172437-03601	LABEL, 2-WAY US	1	1		1				
35	2	172446-03632	LABEL, HUSE US	1	1		1				
36	2	172446-03640	LABEL,GREASE E	1	1		1				
37	2	172446-03652	LABEL, VARIABLE US	1	1		1				

N:Old ⇔ New, Q:Old ⇔ New, R:Old ⇔ New, S:Old ⇔ New, W:Add, Z:Discontinued, F:Interchangeable by set, K:Q'ty Change

++ CONTINUE ++

Copyright (C) 2017 YANMAR CO., LTD. All RightsReserved.

PREVIEW - YOUFIXTHIS.COM

Download full manual at youfixthis.com

Fig.5. MUFFLER & AIR CLEANER

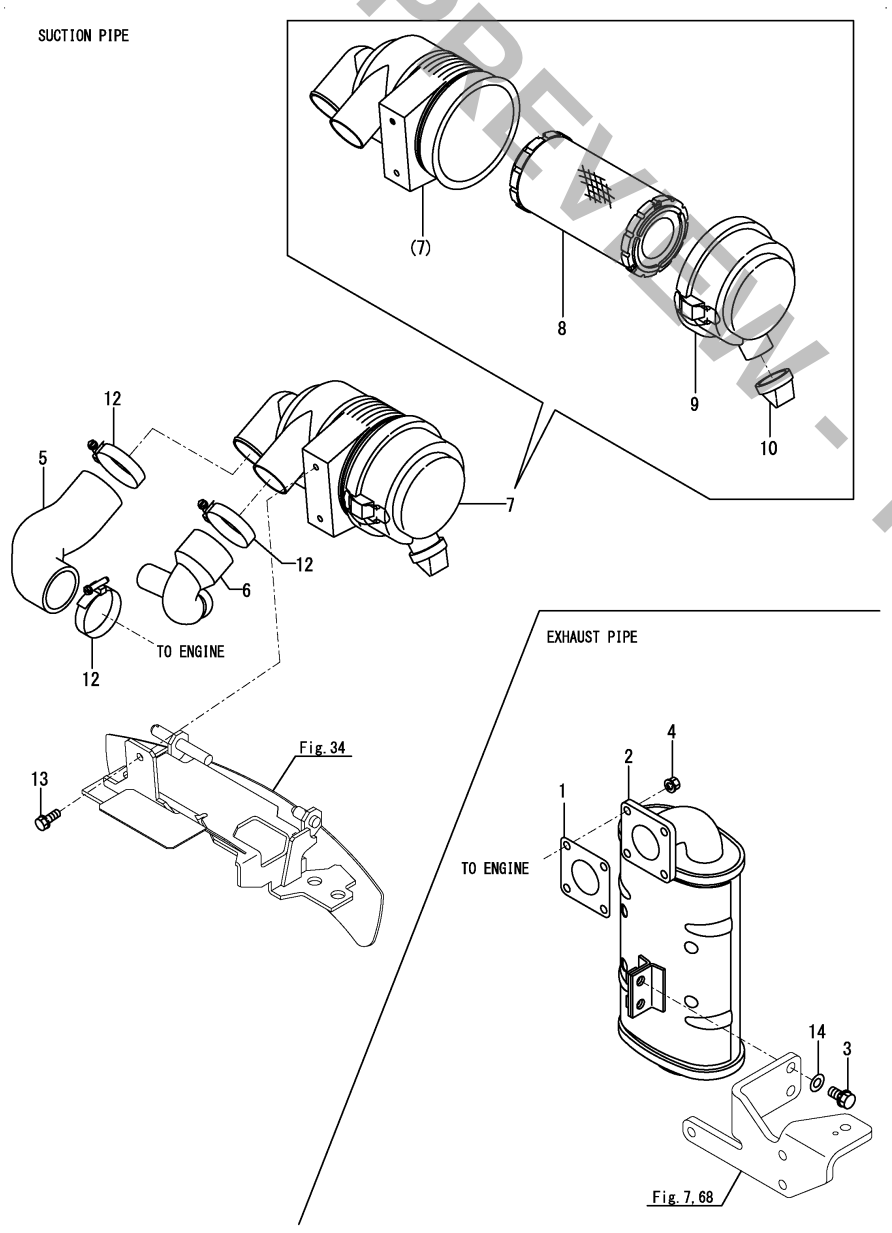

(A)=SV08-1A(US) (D)=SV08-1A(NZ)
(B)=SV08-1A(AS) (E)=SV08-1A(SA)
(C)=SV08-1A(KR) (F)=SV08-1A(HK)

No.	Lev.	Parts No.	Description	Q'ty (A)	(B)	(C)	(D)	(E)	(F)	I	R
1	1	172498-11330	GASKET	1	1	1	1	1	1		
2	1	172A20-11310	SILENCER ASSY	1	1	1	1	1	1		
3	1	26013-100352	BOLT, M10X 35	2	2	2	2	2	2		
4	1	26051-080002	NUT, M8	4	4	4	4	4	4		
5	1	172A20-11510	HOSE A, AIR CREANER	1	1	1	1	1	1		
6	1	172446-11510	HOSE-B,AIR CLEANER	1	1	1					
6-1	1	172446-11511	HOSE, AIR CLEANER B	1	1	1	1	1	1	N	
	(A=M18897)	(B=M18897)	(C=M18897)								
7	1	172A20-11550	CLEANER ASSY, AIR	1	1	1	1	1	1		
8	2	119515-12520	ELEMENT, AIR CLEANER	1	1	1					
8-1	2	119655-12560	ELEMENT	1	1	1	1	1	1	R	
	(A=M17834)	(B=M17834)	(C=M17834)								
9	2	119655-12570	COVER ASSY	1	1	1	1	1	1		1
10	2	119808-12540	VALVE, UNLOAD	1	1	1	1	1	1		
11A	1	172125-03951	LABEL, AIR CLEANER	1	1	1	1	1	1		2
12	1	23000-054000	CLAMP, 54	3	3	3	3	3	3		
13	1	26013-080162	BOLT, M8X 16	2	2	2	2	2	2		
14	1	172137-46042	SEAT, SPRING	2	2	2	2	2	2		

Remarks
(1)Attach the No.11A label to this part.
(2)Label is not illustrated.

N:Old $\overset{\text{Yes}}{\underset{\text{No}}{\leftrightarrows}}$ New, Q:Old $\overset{\text{No}}{\underset{\text{Yes}}{\leftrightarrows}}$ New, R:Old $\overset{\text{Yes}}{\underset{\text{Yes}}{\leftrightarrows}}$ New, S:Old $\overset{\text{No}}{\underset{\text{No}}{\leftrightarrows}}$ New, W:Add, Z:Discontinued, F:Interchangeable by set, K:Q'ty Change

Copyright (C) 2017 YANMAR CO., LTD. All RightsReserved.

PREVIEW - YOUFIXTHIS.COM

Download full manual at youfixthis.com

Fig.12. WIRING

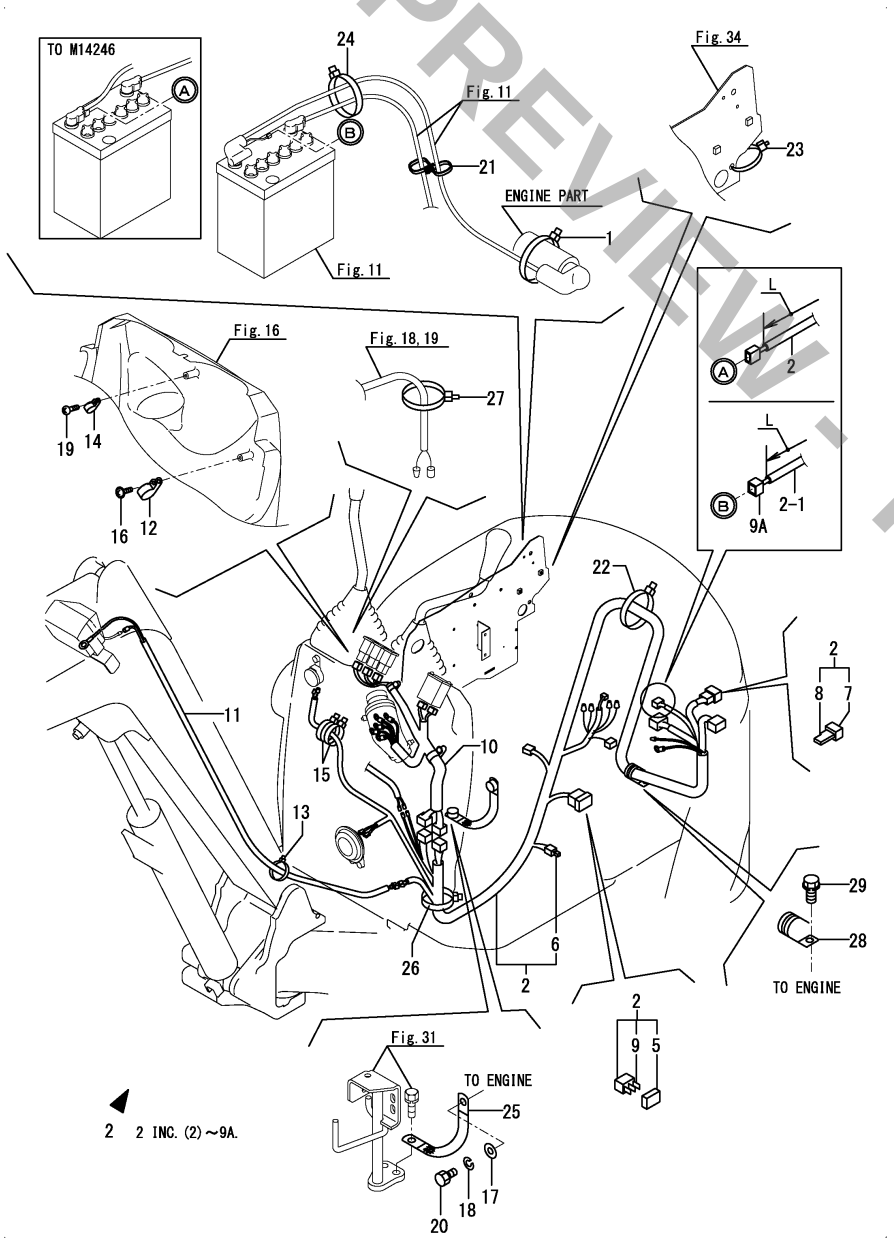

(A)=SV08-1A(US) (D)=SV08-1A(NZ)
(B)=SV08-1A(AS) (E)=SV08-1A(SA)
(C)=SV08-1A(KR) (F)=SV08-1A(HK)

No.	Lev.	Parts No.	Description	Q'ty (A)	(B)	(C)	(D)	(E)	(F)	I	R
1	1	172122-79930	CLAMP, HOSE	1	1	1					
1-1	1	172183-16560	CLIP, HOSE	1	1	1	1	1	1	N	
	(A=M15258)	(B=M15258)	(C=M15258)								
2	1	172A29-16500	WIRE HARNESS ASSY,A	1	1	1					
2-1	1	172A29-16501	WIRE HARNESS ASSY,A	1	1	1	1	1	1	S	1
	(A=M/#14247)	(B=M/#14247)	(C=M/#14247)								
5	2	172183-16590	COVER	1	1	1	1	1	1		
6	2	172648-16600	DIODE, 1.5-2P	1	1	1	1	1	1		
7	2	172447-17140	HOUSING	1	1	1	1	1	1		
8	2	172447-17150	FUSE 40A	1	1	1	1	1	1		
9	2	29420-100000	FUSE, B 10A	3	3	3	3	3	3		
9A	2	172498-16520	HOUSING	1	1	1	1	1	1	W	
	(A=M/#14247)	(B=M/#14247)	(C=M/#14247)								
10	1	172446-16511	HARNESS, STAND	1	1	1	1	1	1		
11	1	172186-16541	HARNESS, WORK LAMP	1	1	1	1	1	1		
12	1	172446-16550	CLAMP	1	1	1	1	1	1		
13	1	172137-16560	BAND	1	1	1	1	1	1		
14	1	172446-16560	CLAMP	1	1	1	1	1	1		
15	1	1A1380-55310	CLAMP, WIRE	2	2	2					
15-1	1	194202-56460	BAND, 200	2	2	2	2	2	2	N	
	(A=M15258)	(B=M15258)	(C=M15258)								
16	1	194940-61790	SCREW, TAPPING M5X16	1	1	1	1	1	1		
17	1	22137-100000	WASHER, 10	1	1	1	1	1	1		
18	1	22217-100000	WASHER, SPRING 10	1	1	1	1	1	1		
19	1	22857-400120	SCREW, 4X12	1	1	1	1	1	1		
20	1	26116-100162	BOLT, M10X 16 PLATED	1	1	1	1	1	1		
21	1	172137-16560	BAND	1	1	1	1	1	1		
22	1	1A1380-55310	CLAMP, WIRE	1	1	1	1	1	1		
23	1	1A1380-55310	CLAMP, WIRE	1	1	1					
23-1	1	194202-56460	BAND, 200	1	1	1	1	1	1	N	
	(A=M15258)	(B=M15258)	(C=M15258)								
24	1	1A1380-55310	CLAMP, WIRE	1	1	1					
24-1	1	194202-56460	BAND, 200	1	1	1	1	1	1	N	
	(A=M15258)	(B=M15258)	(C=M15258)								
25	1	933171-15801	CORD, ENGINE EARTH	1	1	1	1	1	1		
26	1	172122-79920	CLIP, HOSE	1	1	1					
26-1	1	194202-56460	BAND, 200	1	1	1	1	1	1	N	
	(A=M15258)	(B=M15258)	(C=M15258)								
27	1	933168-55770	BAND	1	1	1	1	1	1	W	
	(A=M15258)	(B=M15258)	(C=M15258)								
28	1	1A1686-57850	CLAMP, 80	1	1	1	1	1	1	W	
	(A=M14001)	(B=M14001)	(C=M14001) (D=M14001)								
29	1	26013-080162	BOLT, M8X 16	1	1	1	1	1	1	W	
	(A=M14001)	(B=M14001)	(C=M14001) (D=M14001)								

Remarks
(1)Interchangeable by simultaneous replacement with Fig.11 No.2-1.
L=No.2 : 250mm, No.2-1 : 90mm.

N:Old $\overset{\text{Yes}}{\underset{\text{No}}{\leftrightarrows}}$ New, Q:Old $\overset{\text{No}}{\underset{\text{Yes}}{\leftrightarrows}}$ New, R:Old $\overset{\text{Yes}}{\underset{\text{Yes}}{\leftrightarrows}}$ New, S:Old $\overset{\text{No}}{\underset{\text{No}}{\leftrightarrows}}$ New, W:Add, Z:Discontinued, F:Interchangeable by set, K:Q'ty Change

Copyright (C) 2017 YANMAR CO., LTD. All RightsReserved.

PREVIEW - YOUFIXTHIS.COM
Download full manual at youfixthis.com

Fig.14. SPROCKET & TRACK ROLLER(Y SPEC.)

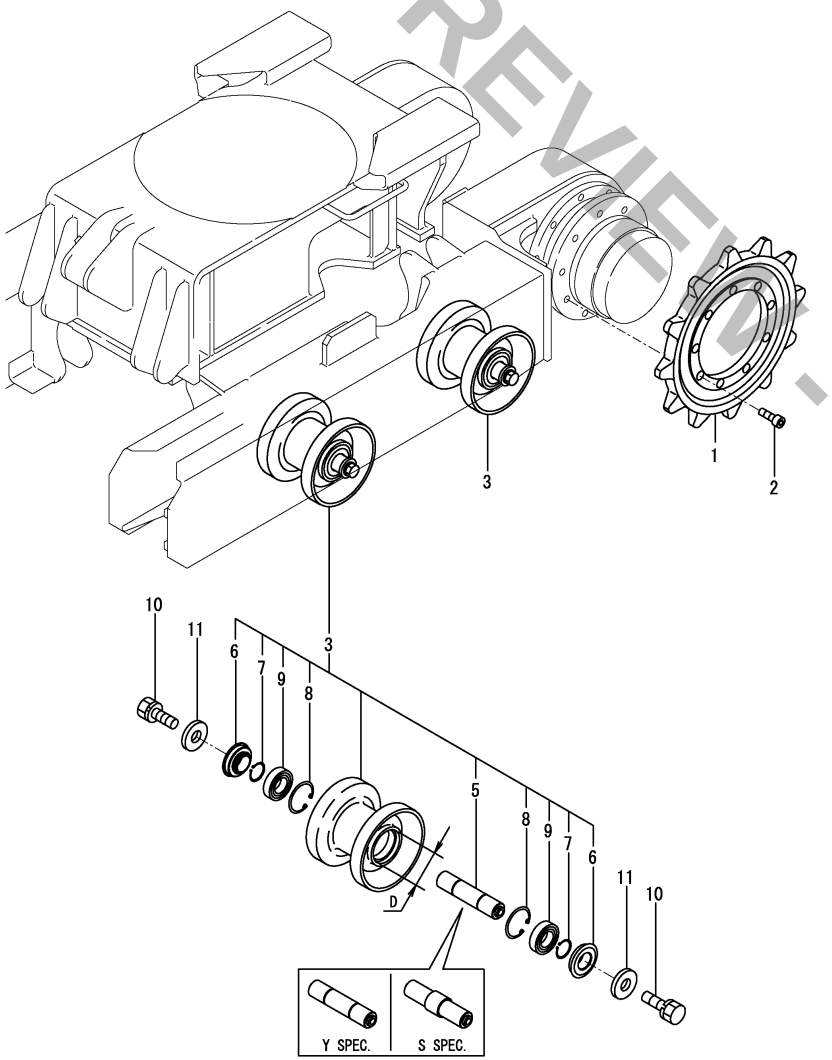

(A)=SV08-1A(US) (D)=SV08-1A(NZ)
(B)=SV08-1A(AS) (E)=SV08-1A(SA)
(C)=SV08-1A(KR) (F)=SV08-1A(HK)

No.	Lev.	Parts No.	Description	Q'ty (A)	(B)	(C)	(D)	(E)	(F)	I	R
1	1	172446-29101-1	SPROCKET	2	2	2	2	2	2		
2	1	26450-100252	BOLT, M10X 25	18	18	18	18	18	18		
3	1	172446-30200	ROLLER, TRACK	4	4	4				Z	1
	(A=M1A087)	(B=M1A087)	(C=M1A087)								
5	2	172155-37310	SHAFT, ROLLER	4	4	4					
6	2	172137-37360	SEAL, TW254716	8	8	8					
7	2	22242-000250	RING, 25	8	8	8					
8	2	22252-000470	RING, 47	8	8	8					
9	2	24101-060054	BEARING, BALL 6005	8	8	8					
10	1	26013-120252	BOLT, M12X 25	8	8	8					
11	1	933152-03700	WASHER, CLUTCH	8	8	8					

Remarks
* Y specification D=53.5mm, S specification D=62mm.
(1)Compatibility by assembly exchang with parts of Fig.75(14A) No.1.
The inner parts are not compatible.

N:Old $\overset{\text{Yes}}{\underset{\text{No}}{\leftrightarrows}}$ New, Q:Old $\overset{\text{No}}{\underset{\text{Yes}}{\leftrightarrows}}$ New, R:Old $\overset{\text{Yes}}{\underset{\text{Yes}}{\leftrightarrows}}$ New, S:Old $\overset{\text{No}}{\underset{\text{No}}{\leftrightarrows}}$ New, W:Add, Z:Discontinued, F:Interchangeable by set, K:Q'ty Change

Copyright (C) 2017 YANMAR CO., LTD. All RightsReserved.

PREVIEW - YOUFIXTHIS.COM

Download full manual at youfixthis.com

Fig.32. SEAT & SEAT MOUNT

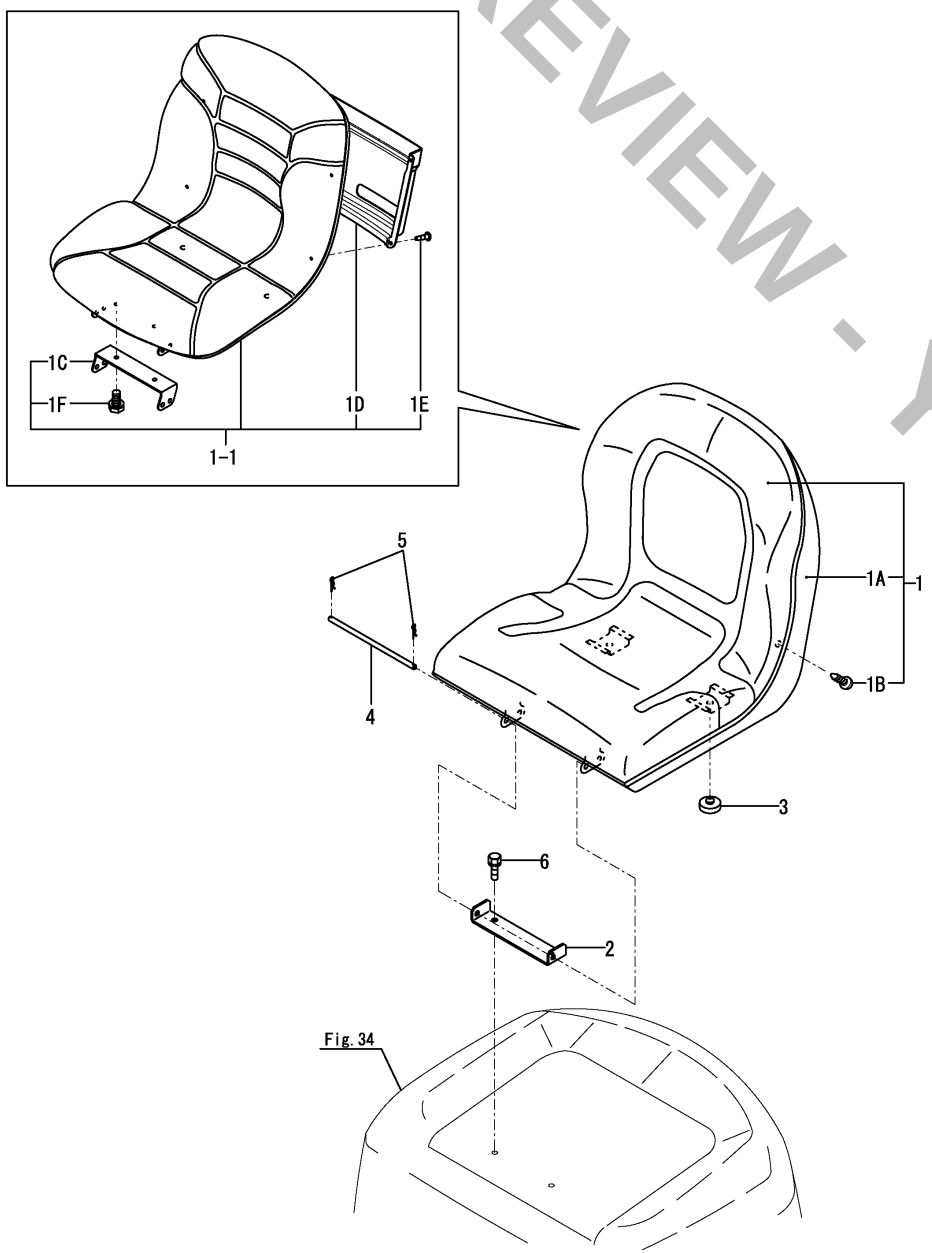

(A)=SV08-1A(US) (D)=SV08-1A(NZ)
(B)=SV08-1A(AS) (E)=SV08-1A(SA)
(C)=SV08-1A(KR) (F)=SV08-1A(HK)

No.	Lev.	Parts No.	Description	Q'ty (A)	(B)	(C)	(D)	(E)	(F)	I	R
1	1	172A54-64100	SEAT ASSY, OPERATOR	1	1	1					
1-1	1	172A64-64010	SEATASSY, OPERATOR	1	1	1				N	
	(A=M15879)	(B=M15879)	(C=M15879)								
1-2	1	172A64-64011	SEAT ASSY	1	1	1	1	1	1	R	
	(A=MAF376)	(B=MAF376)	(C=MAF376) (D=MAF376)								
1A	2	172A54-64110	COVER	1	1	1	1			Z	
	(A=M15879)	(B=M15879)	(C=M15879)								
1B	2	172A54-64120	SCREW, M5X16	4	4	4	4			Z	
	(A=M15879)	(B=M15879)	(C=M15879)								
1C	2	172A64-64020	STAY, SEAT	1	1	1	1	1	1	W	
	(A=M15879)	(B=M15879)	(C=M15879)								
1D	2	172A64-64030	CASE, LETTER	1	1	1	1	1	1	W	
	(A=M15879)	(B=M15879)	(C=M15879)								
1E	2	172A64-64050	SCREW,TAPPING 6.0X16	4	4	4	4	4	4	W	
	(A=M15879)	(B=M15879)	(C=M15879)								
1F	2	26013-080202	BOLT, M8X 20	2	2	2	2			W	
	(A=M15879)	(B=M15879)	(C=M15879)								
1F-1	2	26106-080202	BOLT, M8X 20 PLATED	2	2	2	2	2	2	R	
	(A=MAF376)	(B=MAF376)	(C=MAF376) (D=MAF376)								
2	1	172446-64200	BRACKET, SEAT	1	1	1	1	1	1		
3	1	172141-64370	CUSHION, SEAT	2	2	2	2	2	2		
4	1	172156-64420	PIN	1	1	1	1	1	1		
5	1	22372-080000	PIN, SNAP 8	2	2	2	2	2	2		
6	1	26013-080162	BOLT, M8X 16	2	2	2	2	2	2		

N:Old $\overset{\text{Yes}}{\underset{\text{No}}{\rightleftarrows}}$ New, Q:Old $\overset{\text{No}}{\underset{\text{Yes}}{\rightleftarrows}}$ New, R:Old $\overset{\text{Yes}}{\underset{\text{Yes}}{\rightleftarrows}}$ New, S:Old $\overset{\text{No}}{\underset{\text{No}}{\rightleftarrows}}$ New, W:Add, Z:Discontinued, F:Interchangeable by set, K:Q'ty Change

Copyright (C) 2017 YANMAR CO., LTD. All RightsReserved.

PREVIEW - YOUFIXTHIS.COM

Download full manual at youfixthis.com

Fig.35. HYDRAULIC PUMP & JOINT

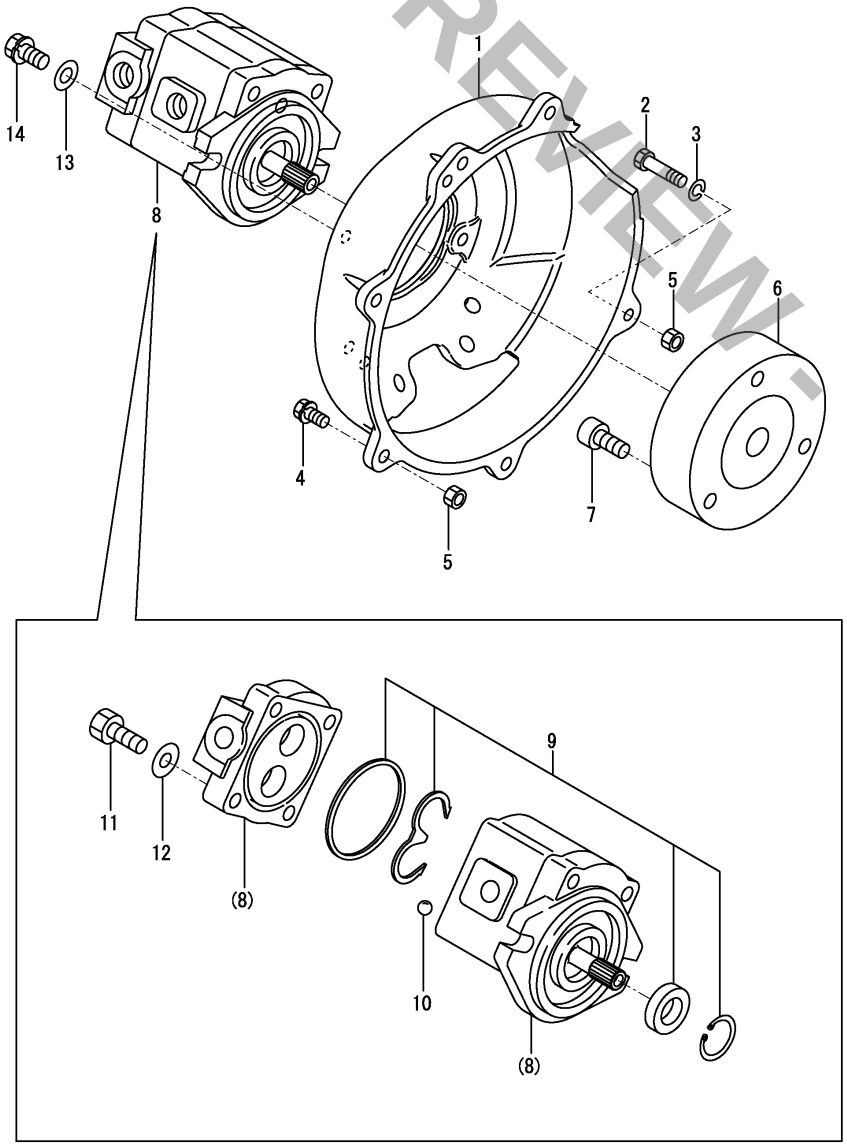

(A)=SV08-1A(US)
(B)=SV08-1A(AS)
(C)=SV08-1A(KR)
(D)=SV08-1A(NZ)
(E)=SV08-1A(SA)
(F)=SV08-1A(HK)

No.	Lev.	Parts No.	Description	Q'ty (A)	(B)	(C)	(D)	(E)	(F)	I	R
1	1	172A20-71100	MOUNT, PUMP	1	1	1	1	1	1		
2	1	172498-71130	REAMER BOLT,8X32	1	1	1	1	1	1		
3	1	22217-080000	WASHER, SPRING 8	1	1	1	1	1	1		
4	1	26013-080302	BOLT, M8X 30	5	5	5	5	5	5		
5	1	26716-080002	NUT, M8	4	4	4	4	4	4		
6	1	172A20-71200	COUPLING	1	1	1	1	1	1		
7	1	26450-100352	BOLT, M10X 35	3	3	3	3	3	3		
8	1	172446-73100	PUMP	1	1	1					
8-1	1	172446-73101	PUMP	1	1	1	1	1	1	R	
	(A=M/# 14342)		(B=M/# 14342) (C=M/# 14342)								
9	2	172446-73120	SEAL SET	1	1	1	1	1	1		
10	2	172446-73130	STEEL BALL	4	4	4	4	4	4		
11	2	172446-73140	BOLT M10	4	4	4	4	4	4		
12	2	172446-73150	WASHER	4	4	4	4	4	4		
13	1	22137-100000	WASHER, 10	2	2	2	2	2	2		
14	1	26013-100252	BOLT, M10X 25	2	2	2	2	2	2		

N:Old $\overset{\text{Yes}}{\underset{\text{No}}{\leftrightarrows}}$ New, Q:Old $\overset{\text{No}}{\underset{\text{Yes}}{\leftrightarrows}}$ New, R:Old $\overset{\text{Yes}}{\underset{\text{Yes}}{\leftrightarrows}}$ New, S:Old $\overset{\text{No}}{\underset{\text{No}}{\leftrightarrows}}$ New, W:Add, Z:Discontinued, F:Interchangeable by set, K:Q'ty Change

Copyright (C) 2017 YANMAR CO., LTD. All RightsReserved.

PREVIEW - YOUFIXTHIS.COM

Download full manual at youfixthis.com

Fig.47. CONTROL VALVE(1/3)(VARIABLE LEG : LINK TYPE)

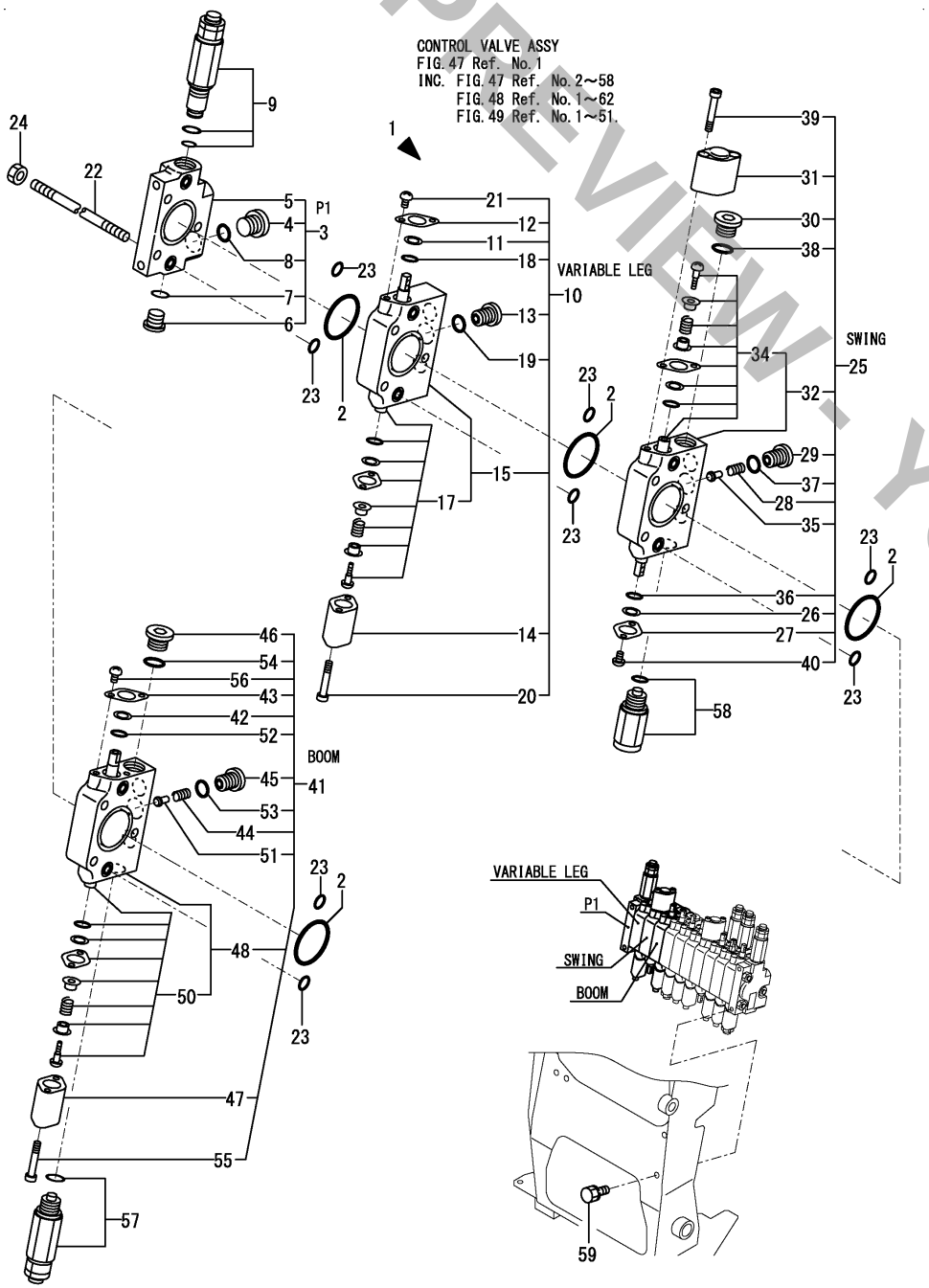

(A)=SV08-1A(US) (B)=SV08-1A(AS) (C)=SV08-1A(KR) (D)=SV08-1A(NZ) (E)=SV08-1A(SA) (F)=SV08-1A(HK)

No.	Lev.	Parts No.	Description	Q'ty (A)	(B)	(C)	(D)	(E)	(F)	I	R
1	1	172A29-74210	VALVE, CONTROL	1	1		1	1	1		
2	2	172157-70710	O-RING	4	4		4	4	4		
3	2	172446-74120	SECTION ASSY	1	1		1	1	1		
4	3	172157-70720	PLUG PF3/8	1	1		1	1	1		
5	3	172447-74250	SECTION	1	1		1	1	1		
6	3	172183-74350	PLUG	1	1		1	1	1		
7	3	24315-000110	O-RING, 1BP11.0	1	1		1	1	1		
8	3	24315-000140	O-RING, 1BP14.0	1	1		1	1	1		
9	2	172A29-74350	MAIN RELIEF VALVE	1	1		1	1	1		
10	2	172446-74550	SECTION ASSY, OPTION	1	1		1	1	1		
11	3	172157-70630	BAC UP RING	1	1		1	1	1		
12	3	172157-70640	PLATE, O-RING	1	1		1	1	1		
13	3	172157-70700	STAY, VALVE	1	1		1	1	1		
14	3	172157-70820	CAP, SPRING	1	1		1	1	1		
15	3	172446-74580	SECTION, OPTION	1	1		1	1	1		
17	4	172446-74570	SPOOL ASSY,OPTIONAL	1	1		1	1	1		
18	3	24311-240100	O-RING, 1AP10A	1	1		1	1	1		
19	3	24315-000110	O-RING, 1BP11.0	1	1		1	1	1		
20	3	26450-050452	BOLT, M5X 45	2	2		2	2	2		
21	3	26557-050102	SCREW, M5X10	2	2		2	2	2		
22	2	172446-74560	BOLT	3	3		3	3	3		
23	2	24315-000100	O-RING, 1BP10.0	8	8		8	8	8		
24	2	26716-080002	NUT, M8	6	6		6	6	6		
25	2	172446-74130	SECTION ASSY, SWING	1	1		1	1	1		
26	3	172157-70630	BAC UP RING	1	1		1	1	1		
27	3	172157-70640	PLATE, O-RING	1	1		1	1	1		
28	3	172157-70690	SPRING, VALVE	1	1		1	1	1		
29	3	172157-70700	STAY, VALVE	1	1		1	1	1		
30	3	172157-70720	PLUG PF3/8	1	1		1	1	1		
31	3	172157-70820	CAP, SPRING	1	1		1	1	1		
32	3	172446-74410	SECTION, SWING	1	1		1	1	1		
34	4	172446-74260	SPOOL ASSY, SWING	1	1		1	1	1		
35	3	172137-74520	VALVE, CHECK	1	1		1	1	1		
36	3	24311-240100	O-RING, 1AP10A	1	1		1	1	1		
37	3	24315-000110	O-RING, 1BP11.0	1	1		1	1	1		
38	3	24315-000140	O-RING, 1BP14.0	1	1		1	1	1		
39	3	26450-050452	BOLT, M5X 45	2	2		2	2	2		
40	3	26557-050102	SCREW, M5X10	2	2		2	2	2		
41	2	172446-74140	SECTION ASSY, BOOM	1	1		1	1	1		
42	3	172157-70630	BAC UP RING	1	1		1	1	1		
43	3	172157-70640	PLATE, O-RING	1	1		1	1	1		
44	3	172157-70690	SPRING, VALVE	1	1		1	1	1		
45	3	172157-70700	STAY, VALVE	1	1		1	1	1		
46	3	172157-70720	PLUG PF3/8	1	1		1	1	1		
47	3	172157-70820	CAP, SPRING	1	1		1	1	1		
48	3	172446-74420	SECTION, BOOM	1	1		1	1	1		
50	4	172446-74280	SPOOL ASSY, BOOM	1	1		1	1	1		
51	3	172137-74520	VALVE, CHECK	1	1		1	1	1		
52	3	24311-240100	O-RING, 1AP10A	1	1		1	1	1		
53	3	24315-000110	O-RING, 1BP11.0	1	1		1	1	1		
54	3	24315-000140	O-RING, 1BP14.0	1	1		1	1	1		

N:Old ⇔ New, Q:Old ⇔ New, R:Old ⇔ New, S:Old ⇔ New, W:Add, Z:Discontinued, F:Interchangeable by set, K:Q'ty Change

++ CONTINUE ++

Copyright (C) 2017 YANMAR CO., LTD. All RightsReserved.

PREVIEW - YOUFIXTHIS.COM

Download full manual at youfixthis.com

Fig.63. BOOM & BOOM BRACKET

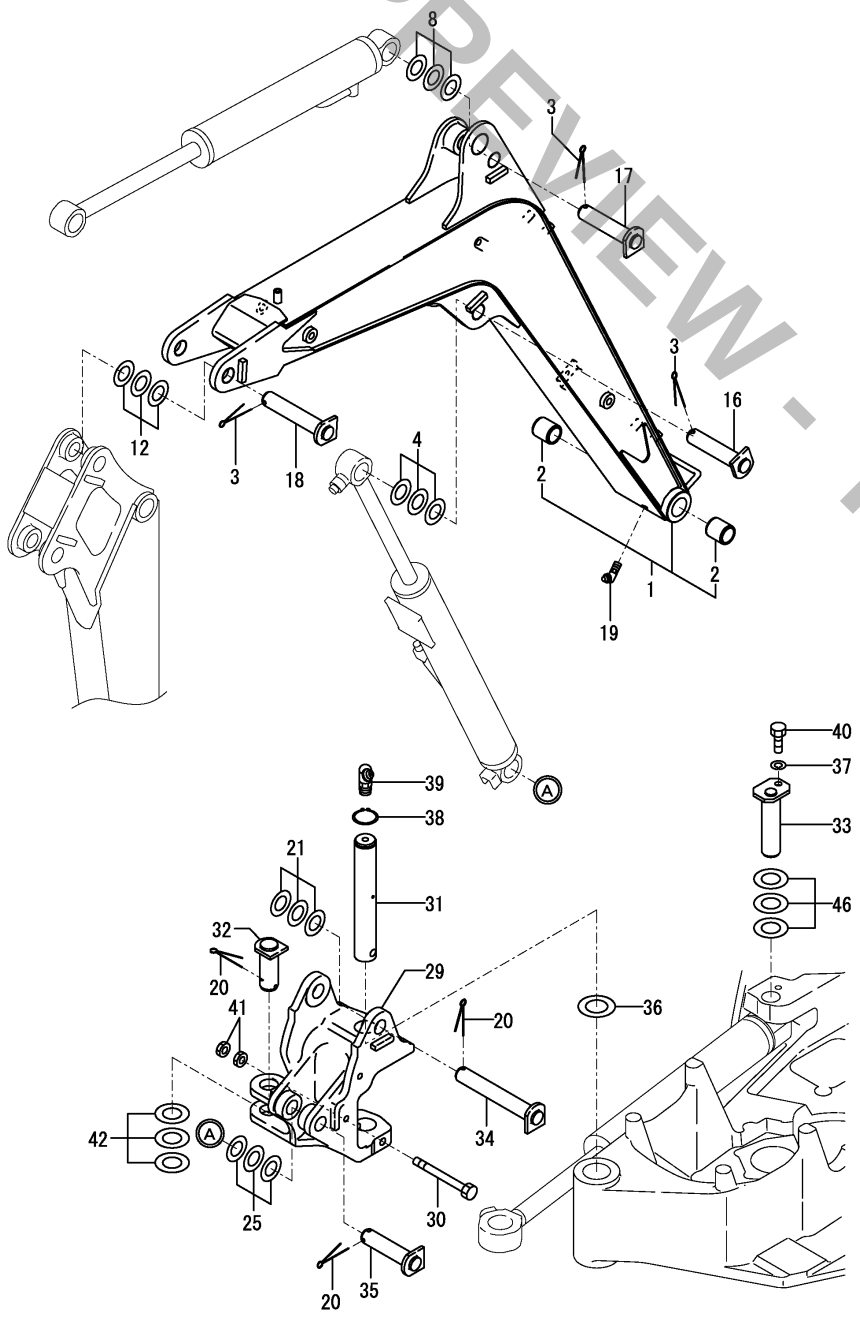

(A)=SV08-1A(US) (D)=SV08-1A(NZ)
(B)=SV08-1A(AS) (E)=SV08-1A(SA)
(C)=SV08-1A(KR) (F)=SV08-1A(HK)

No.	Lev.	Parts No.	Description	Q'ty (A)	(B)	(C)	(D)	(E)	(F)	I	R
1	1	172446-81090-1	BOOM ASSY	1	1	1					
1-1	1	172446-81090-Y	BOOM ASSY	1	1	1	1	1	1	S	
	(A=M17001)	(B=M17001)	(C=M17001)								
2	2	172156-72410	BUSH, PIN 25 35 A	2	2	2	2	2	2		
3	1	172155-81390	COTTER PIN 6X 35	3	3	3	3	3	3		
4	1	172156-81400	SHIM ASSY	1	1	1	1	1	1		
8	1	172156-81400	SHIM ASSY	1	1	1	1	1	1		
12	1	172156-81400	SHIM ASSY	1	1	1	1	1	1		
16	1	172A29-81400	PIN 25X106	1	1	1	1	1	1		
17	1	172A29-81400	PIN 25X106	1	1	1	1	1	1		
18	1	172498-81320	PIN ASSY, 25X124	1	1	1	1	1	1		
19	1	24761-050000	NIPPLE, GREASE C	1	1	1	1	1	1		
20	1	172155-81390	COTTER PIN 6X 35	3	3	3	3	3	3		
21	1	172156-81400	SHIM ASSY	1	1	1	1	1	1		
25	1	172156-81400	SHIM ASSY	1	1	1	1	1	1		
29	1	172446-82300-1	BRACKET, BOOM	1	1	1					
29-1	1	172446-82300-Y	BRACKET,BOOM	1	1	1	1	1	1	S	
	(A=M17001)	(B=M17001)	(C=M17001)								
30	1	172157-82340	BOLT, 12X95	1	1	1	1	1	1		
31	1	172A29-82350	PIN 35X233	1	1	1	1	1	1		
32	1	172A29-82370	PIN 30X 67	1	1	1	1	1	1		
33	1	172A29-82400	PIN 30X112	1	1	1	1	1	1		
34	1	172A29-82450	PIN 25X161	1	1	1	1	1	1		
35	1	172498-82320	PIN ASSY, 25X98	1	1	1	1	1	1		
36	1	172141-84630	SHIM	1	1	1	1	1	1		
37	1	22217-100000	WASHER, SPRING 10	1	1	1	1	1	1		
38	1	22242-000350	RING, 35	1	1	1	1	1	1		
39	1	24761-050000	NIPPLE, GREASE C	1	1	1	1	1	1		
40	1	26116-100202	BOLT, M10X 20 PLATED	1	1	1	1	1	1		
41	1	26756-120002	NUT, LOCK M12	2	2	2	2	2	2		
42	1	933160-06711	SHIM ASSY	1	1	1	1	1	1		
46	1	933160-06711	SHIM ASSY	1	1	1	1	1	1		

N:Old $\overset{\text{Yes}}{\underset{\text{No}}{\leftrightarrows}}$ New, Q:Old $\overset{\text{No}}{\underset{\text{Yes}}{\leftrightarrows}}$ New, R:Old $\overset{\text{Yes}}{\underset{\text{Yes}}{\leftrightarrows}}$ New, S:Old $\overset{\text{No}}{\underset{\text{No}}{\leftrightarrows}}$ New, W:Add, Z:Discontinued, F:Interchangeable by set, K:Q'ty Change

Copyright (C) 2017 YANMAR CO., LTD. All RightsReserved.

PREVIEW - YOUFIXTHIS.COM

Download full manual at youfixthis.com

VEHICLE PAINTED COLOR(2)(FROM M17001 TO MAF000)

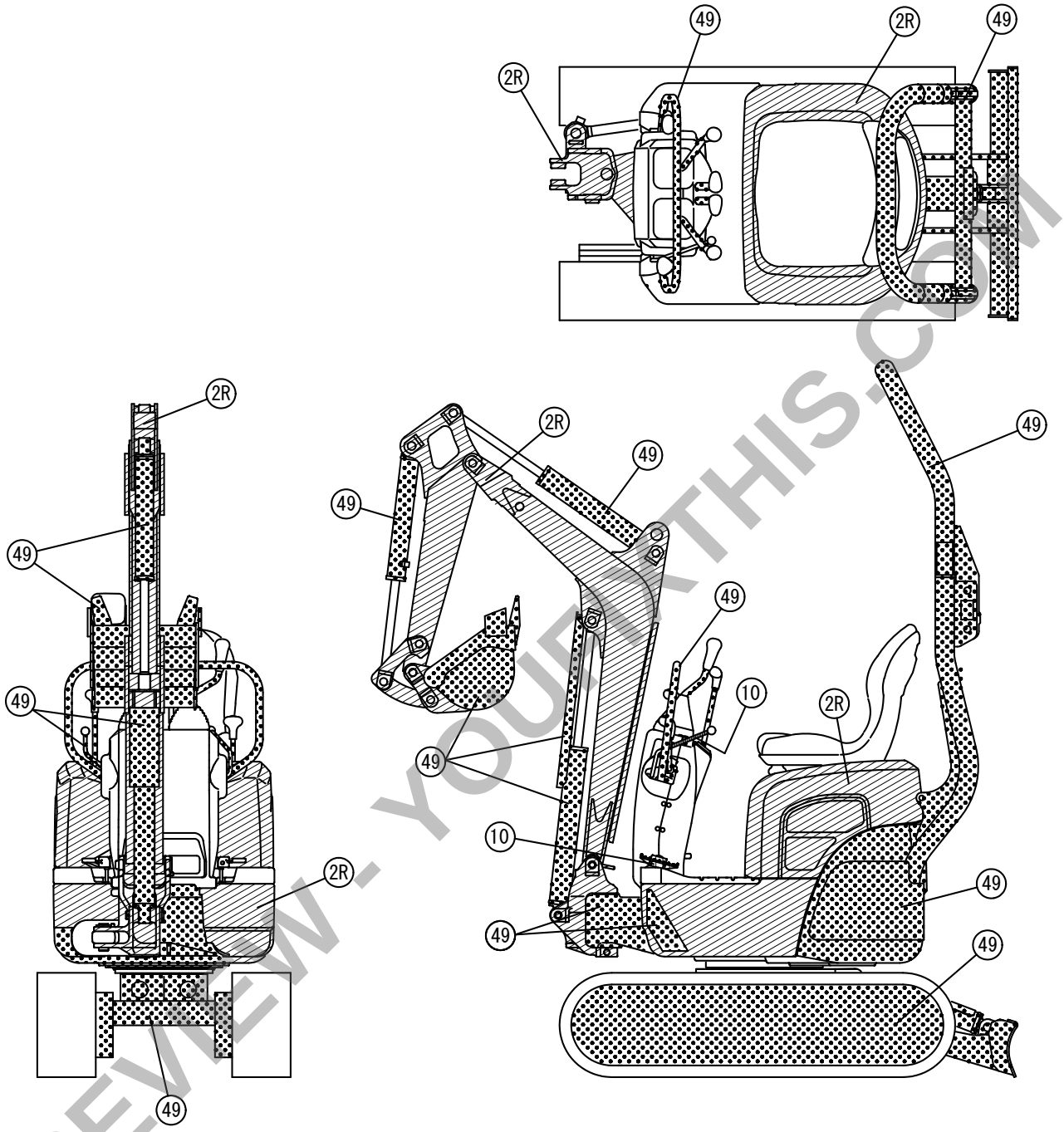

Color Code	Desc-ription	Painted Color	Paint Part No.		
			16L Can	4L Can	SPRAY
2R		YANMAR Turmeric Yellow	-------	977620-41001	977620-41002
49		YANMAR Navy Gray	-------	TOR-91390001	TOR-94800491
10		YANMAR Red 2	-------	TOR-91000002	TOR-90000004

PREVIEW - YOUFIXTHIS.COM
Download full manual at youfixthis.com

PREVIEW ONLY

You're viewing 12 of 121 pages

The full manual includes:

- All 121 pages, complete
- Searchable PDF (find any keyword)
- No watermarks
- Instant download
- Print-ready quality

GET FULL MANUAL NOW

Yanmar SV08-1A Parts Catalog

Scan or click anywhere
youfixthis.com

Click anywhere on this page to get the full manual