7.5 Disassembly of radiator

1. Take off the radiator cover
   1) Slacken off the cap.
   2) Take off the radiator cover.
   3) Take off the screen duct and front covers on the right and left.

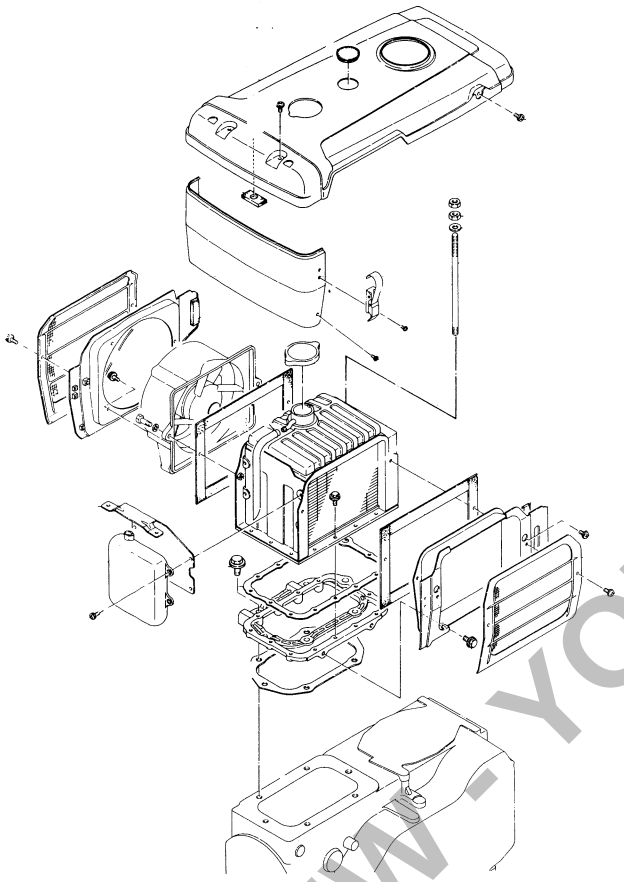

(Model: TS190R)

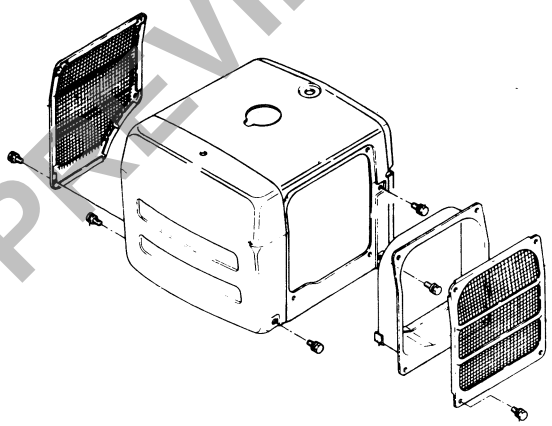

(Model: TS230R)

2. Dismount the fuel tank.
   1) Slacken off the pipe coupling bolt on the fuel tank outlet.
   2) Slacken off the fuel tank clamp bolt. Remove the self-locking nut.
   3) Remove the fuel tank.

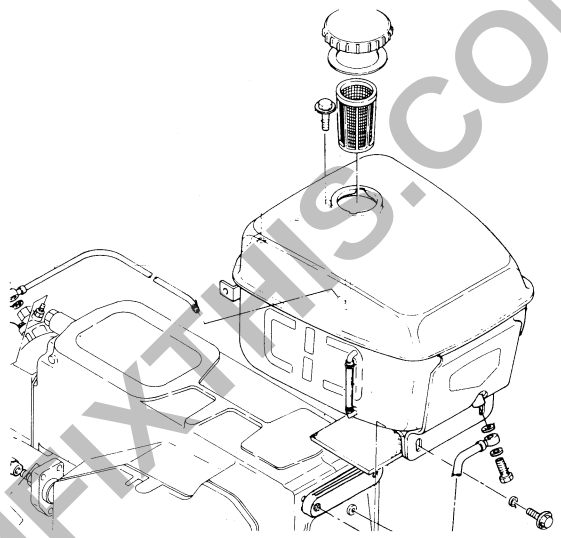

Dismount the fuel tank

3. Detach the fan case assembly.
   1) Take off the belt.
   2) Slacken off the tension pulley bolt.
   3) Remove the fan case by slackening off the four bolts.

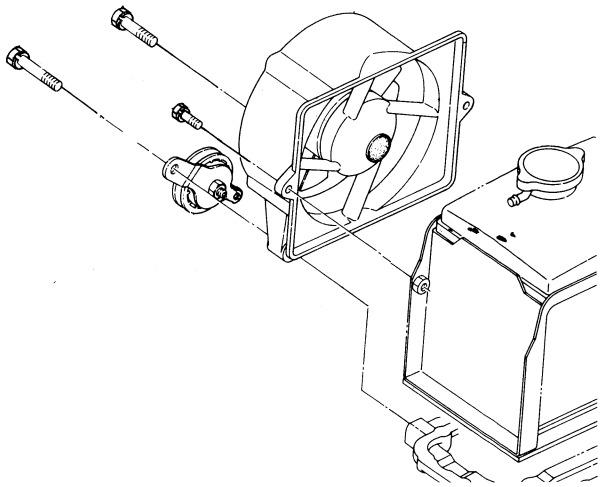

Remove the fan case

PREVIEW - YOUFIXTHIS.COM

Download full manual at youfixthis.com

7. Disassembly and Reassembly

7.1 Preparation for Disassembly

Make the following preparations prior to disassembling the engine.

1) Selection of work area

Select a clean area — well organised, and free of dirt and rubbish.

2) Preparation of parts storage area and parts containers

Prepare a suitable area and containers to ensure that the parts will not be stained or damaged.

3) Preparation of cleaner or cleaning can

Prepare a parts washing cleaner. Otherwise, make use of half of an 18-liter can, prepared by cutting the can vertically.

4) Preparation and check of tools and instruments

The following listings show the tools and instruments required for disassembling and reassembling engines. Suitable items should be used selectively according to the complexity and sections of the engine to be disassembled.

7.2 Disassembling/assembling tools

Note: The tools for both TS190(R) and TS230(R), the model name is not given.

Unit: mm

Tool (Yanmar code No.)	Size	Illustration
Piston insertion tool (optional) (TS190: 105890-92140) (TS230: 105990-92140)	<table><tr><td></td><td>A</td><td>B</td><td>C</td></tr><tr><td>TS190</td><td>110</td><td>20</td><td>30</td></tr><tr><td>TS230</td><td>112</td><td>20</td><td>30</td></tr></table>	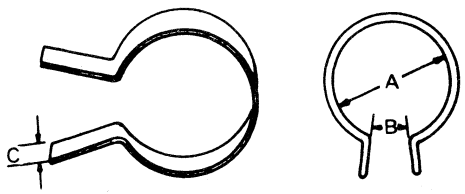
Flywheel puller (optional) Base plate-A (104300-92120) Base plate-B (104300-92110) Pulling bolt (104200-92130)	<table><tr><td>A</td><td>40</td></tr><tr><td>B</td><td>90</td></tr><tr><td>C</td><td>ϕ52 Pulling bolt M36 x 2</td></tr><tr><td>D</td><td>42</td></tr><tr><td>E</td><td>72</td></tr><tr><td>F</td><td>77</td></tr><tr><td>G</td><td>65</td></tr></table>	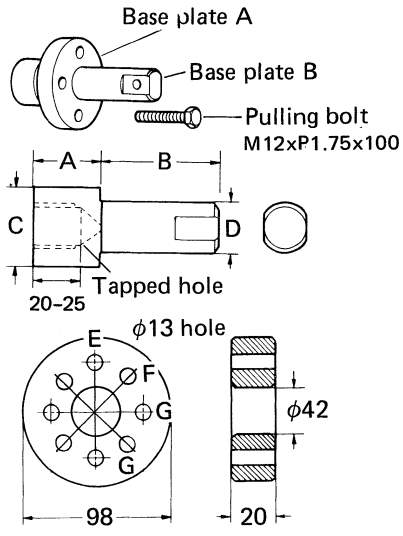
End nut wrench (optional) (103338-92100)	A 57	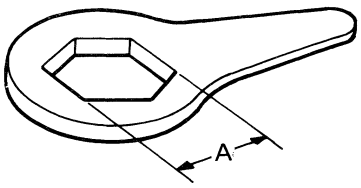

PREVIEW - YOUFIXTHIS.COM

Download full manual at youfixthis.com

10. Service Standards

Division	Component	Item		TS190(R) Standard	TS190(R) Limit	TS230(R) Standard	TS230(R) Limit	Action
Cylinder Head	Cylinder head	Combustion surface		For 100 mm cylinder head	0.05	←	0.05	Replace if distorted or cracked. page 28
		Intake/exhaust valve stem diameter		φ8.945 – φ8.960	φ8.85		φ8.85	If beyond the limit, replace both valve and vale guide. Page 29
		Valve guide inner diameter bore	Intake	φ9 – φ9.015	φ9.1	←	←	
			Exhaust					
		Valve stem-to-guide clearance	Intake	0.04 – 0.07	0.15	←	0.15	Page 29
			Exhaust					
		Valve seat width	Intake	1.73	—	←	—	Repair seat. If appreciably worn or damaged, replace cylinder head. Page 29
			Exhaust	2.47	—	←	—	
		Top clearance		0.8 – 1.0	0.85–1.05	←	←	Measure with fuse diameter φ1.5 – φ2.0 Page 30
	Intake/exhaust valve	Intake/exhaust valve sinkage	Intake	0.25 – 0.55	1.4	←	1.4	If beyond the limit, replace or recondition. Page 29
			Exhaust	0.65 – 0.95	1.8	←	1.8	
		Valve head thickness	Intake	1.8 – 2.2	1.5	←	1.5	Page 28
			Exhaust	1.3 – 1.7	1.0	←	1.0	
	Valve spring	Free length		53	—	←	—	Replace if badly damped or inclined. Page 30
		Mounted length		48	—	←	—	
		Spring load		12.9 kg	—	←	—	
		Squareness		———	1.5	←	1.5	
	Intake/exhaust valve rocker arm	Intake/exhaust valve rocker arm shaft outer diameter		φ19.959 – φ19.980	–0.1	←	–0.1	Replace if beyond limit. Page 30
		Rocker arm bushing inside diameter		φ20 – φ20.021	+0.1	←	–0.1	
		Shaft-to-bore clearance		0.02 – 0.062	0.15	←	0.15	
	Intake/exhaust valve head clearance			0.2	—	←	—	Measure and adjust, in cool state. Page 31
	Decompression lift			0.6 – 1.0	—	0.8 – 1.2	—	If associated parts are disassembled, check and adjust the lift when the parts are reassembled. Page 31
Piston and Piston Rings	Piston maximum diameter (at skirt)			φ109.94 – φ109.835	–0.4	φ111.82–φ109.835	–0.4	Replace if beyond limit (as measured perpendicular to pin). Page 33
	Piston ring	Piston ring end gaps	No. 1	0.3 – 0.5	1.8	←	1.8	Replace if beyond limit.
			No. 2	0.3 – 0.5	1.8	←	1.8	
			No. 3	0.3 – 0.5	1.8	←	1.8	
			Oil ring	0.3 – 0.5	1.8	←	1.8	
		Ring-to-groove clearance	No. 1	0.095 – 0.130	0.30	←	0.30	If ring is beyond limit, replace ring. If both piston and ring are beyond their limits, replace them as a unit. Page 34
			No. 2	0.05 – 0.085	0.25	←	0.25	
			No. 3	0.05 – 0.085	0.25	←	0.25	
			Oil ring	0.02 – 0.055	0.20	←	0.20	
	Piston pin	Piston pin diameter		φ35,989 – φ36	–0.05	←	–0.05	Replace if beyond limit. When pin is pulled out and inserted, do it by warming oil. Page 34
		Piston-to-piston pin clearance		0 – 0.022	—	←	—	
		Pin inserting temperature		50 – 60°C	—	←	—	
Connecting Rod	Connecting rod	Bent or twisted connecting rod		0.03	0.05	←	0.05	Replace if beyond limit.
		Thrust clearance of connecting rod		0.2 – 0.4	0.5	←	0.5	Replace if beyond limit.
		Piston pin bearing metal inside diameter		φ36,025 – φ36,040	0.12	←	0.12	Page 38
		Piston pin-to-bearing clearance		0.025 – 0.051	0.15	←	0.15	
		Crankpin bearing surface		—	—	—	—	Replace if flaked, damaged, or discolored.
		Crankpin bearing inside diameter		φ58 – φ58,045	0.1	φ60 – φ60,045	0.1	Replace if beyond limit.
		Crankpin-to-bearing clearance		0.022 – 0.092	0.1	←	0.1	Page 39
Cylinder Liner	Cylinder liner	Cylinder liner inside diameter		φ110 – φ110,035	0.25	112 – 112,035	0.25	Replace if beyond limit.
		Cylinder liner out-of-roundness		0.015	0.1	←	0.1	Re-fit if beyond limit. Page 32
		Cylinder liner projection		0.03 – 0.10	—	———	—	

PREVIEW - YOUFIXTHIS.COM

Download full manual at youfixthis.com

12. Troubleshooting

Trouble and possible cause	Remedy
Insufficient output	
1. Reduction in compression pressure	
(1) Improper intake/exhaust valve head clearance	Adjust to the proper clearance (0.2 mm)
(2) Pressure leak at valve seat	Remove cylinder head, and re-fit valve and seat.
(3) Valve stem seizing	Repair or replace valve stem

PREVIEW - YOUFIXTHIS.COM

Blurred on purpose. The manual you buy has this page in full quality.

Download full manual at youfixthis.com

CONTENTS

Blurred on purpose. The manual you buy has this page in full quality.

PREVIEW - YOUFIXTHIS.COM

Download full manual at youfixthis.com

7.7 Reassembling procedure

Note: Tightening torque and dimensions indicate the specifications for both TS290(R) and TS230(R), the model name is not given.

Before starting assembly

- Thoroughly wash and inspect all the parts to be assembled.
- Apply fresh engine oil to rubbing or rotating surfaces before assembly.
- Replace gaskets and O-rings with new ones.
- Apply, if necessary, liquid sealant to prevent water or oil leakage.
- Assemble parts after inspecting oil clearances and thrust clearances.
- Assemble parts with matching marks so that the marks align correctly. Take care that the matching pairs are correctly assembled.
- Do not use wrong bolts, nuts, and washers. Tighten standard bolts and nuts to the specified tightening torques. Take special care when assembling aluminum-alloy parts.
- Apply engine oil to the thread and seat of principal bolts before tightening them.

1. Insert the liner.

1) After cleaning the O-ring grooves inside the body, put the O-rings into the grooves. Care should be taken to avoid twisting of the O-rings. (The liner may be positioned in either direction.)

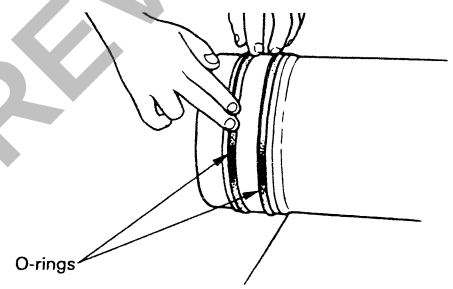

Put the O-rings into the grooves

2. Put the tappet into place.

1) Apply a coating of lubricating oil.
2) With the tappet in place, check if they move smoothly.

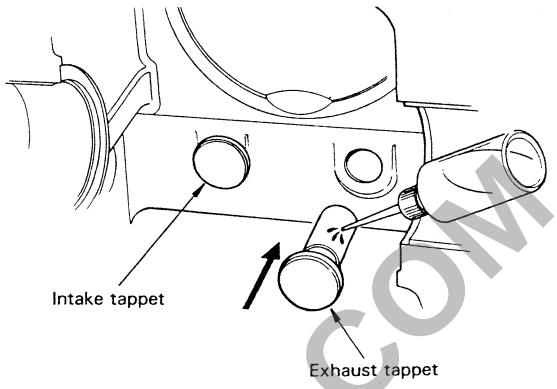

Assemble the tappet

3. Assemble the camshaft assembly into place.

1) Coat the shaft bearing with lubricating oil.
2) Install the camshaft bearing set bolt. (Do not knock the camshaft directly.)

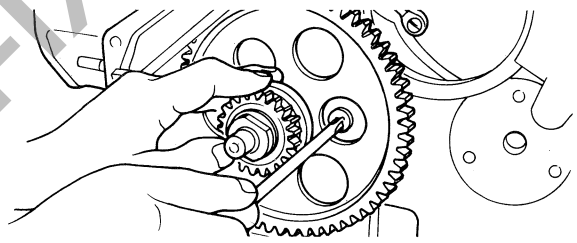

Bearing set Bolt Tightening Torque

150 kg-cm

Assemble the camshaft assembly

4. Install the lubricating oil pump.

1) With packing placed around the body, assemble the pump into place by properly positioning the groove the camshaft end. The camshaft must be able to turn lightly.
2) Check the pump body bolt to ensure it contains copper packing.

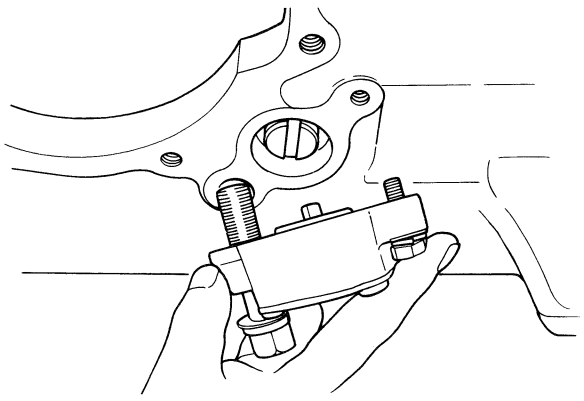

Assemble the lubricating oil pump

PREVIEW - YOUFIXTHIS.COM

Download full manual at youfixthis.com

(Unit: mm)

	Standard dimension	Limit
Camshaft outside diameter	ϕ35.95 – ϕ35.925	0.1
Cylinder body bore diameter	ϕ36.0 – ϕ36.025	0.15
Shaft-to-bore clearance	0.05 – 0.1	0.2

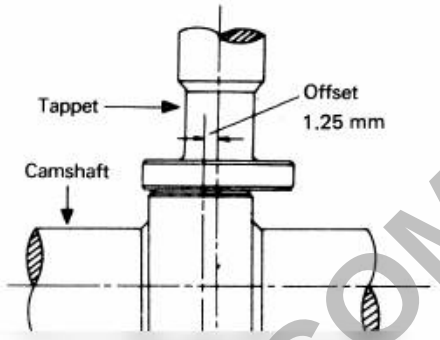

PREVIEW - YOUFIXTHIS.COM

Blurred on purpose. The manual you buy has this page in full quality.

Download full manual at youfixthis.com

PREVIEW ONLY

You're viewing 7 of 68 pages

The full manual includes:

- All 68 pages, complete
- Searchable PDF (find any keyword)
- No watermarks
- Instant download
- Print-ready quality

GET FULL MANUAL NOW

Yanmar TS190(R), TS230(R) Service Manual

Scan or click anywhere
youfixthis.com

Click anywhere on this page to get the full manual