YANMAR
EXCAVATOR

OPERATION & MAINTENANCE MANUAL

⚠ WARNING

- Never attempt to operate or service this Excavator until you have first read and understood all of the applicable Safety Instructions that are set forth in this Manual.

  The failure to comply with all relevant Safety Instructions could result in bodily injury.

- To assure that this Manual will be conveniently available to future users, always return it to its storage compartment, when it is not being used.

LGBVIO20.0(EP)230603

MODEL ViO20 (EP)

S/N 25501 & Above

PREVIEW - YOUFIXTHIS.COM

Download full manual at youfixthis.com

6. Contents

1. Introduction 0-1
2. Safety Information 0-2
3. Product Overview 0-3
  3-1. Intended uses 0-3
  3-2. Break in period 0-3
4. Operation License 0-4
5. Ordering Replacement Parts and Service Call 0-5
  5-1. Location of machine serial number plate 0-5
  5-2. Location of engine serial number plate 0-5
  5-3. Ordering replacement parts and service calls 0-5
6. Contents 0-6

SAFETY

7. Basic Precautions 1-2
8. Operating Precautions 1-6
  8-1. Precautions before starting the engine 1-6
  8-2. Precautions for starting the engine, working and parking 1-8
  8-3. Precautions for transportation 1-13
  8-4. Precautions for the battery 1-14
  8-5. Precautions for towing 1-15
  8-6. Precautions for hooked bucket 1-16
9. Precautions for Servicing 1-19
  9-1. Precautions before servicing 1-19
  9-2. Precautions during servicing 1-21
10. Safety Messages (Warning Labels) 1-25
  10-1. Location of warning labels 1-25

OPERATION

11. Identification of Important Parts 2-2
  11-1. Overview of the machine 2-2
  11-2. Controls and switches 2-3
12. Description of Control Devices 2-4
  12-1. Monitor 2-4
  12-2. Switch 2-7
  12-3. Control levers and pedals 2-10
  12-4. Engine hood rear cover 2-14
  12-5. Storage space for the operation & maintenance manual 2-14
  12-6. Operator's seat 2-15
  12-7. Headlight 2-16
  12-8. Fuse 2-17

PREVIEW - YOUFIXTHIS.COM

Download full manual at youfixthis.com

SAFETY

⚠ WARNING

Never attempt to operate or service this Excavator until you have first read and understood all of the applicable Safety Instructions that are set forth in this Manual.

The failure to comply with all relevant Safety Instructions could result in bodily injury.

PREVIEW - YOUFIXTHIS.COM

Download full manual at youfixthis.com

OPERATION

PREVIEW - YOUFIXTHIS.COM

Download full manual at youfixthis.com

11-2. Controls and switches

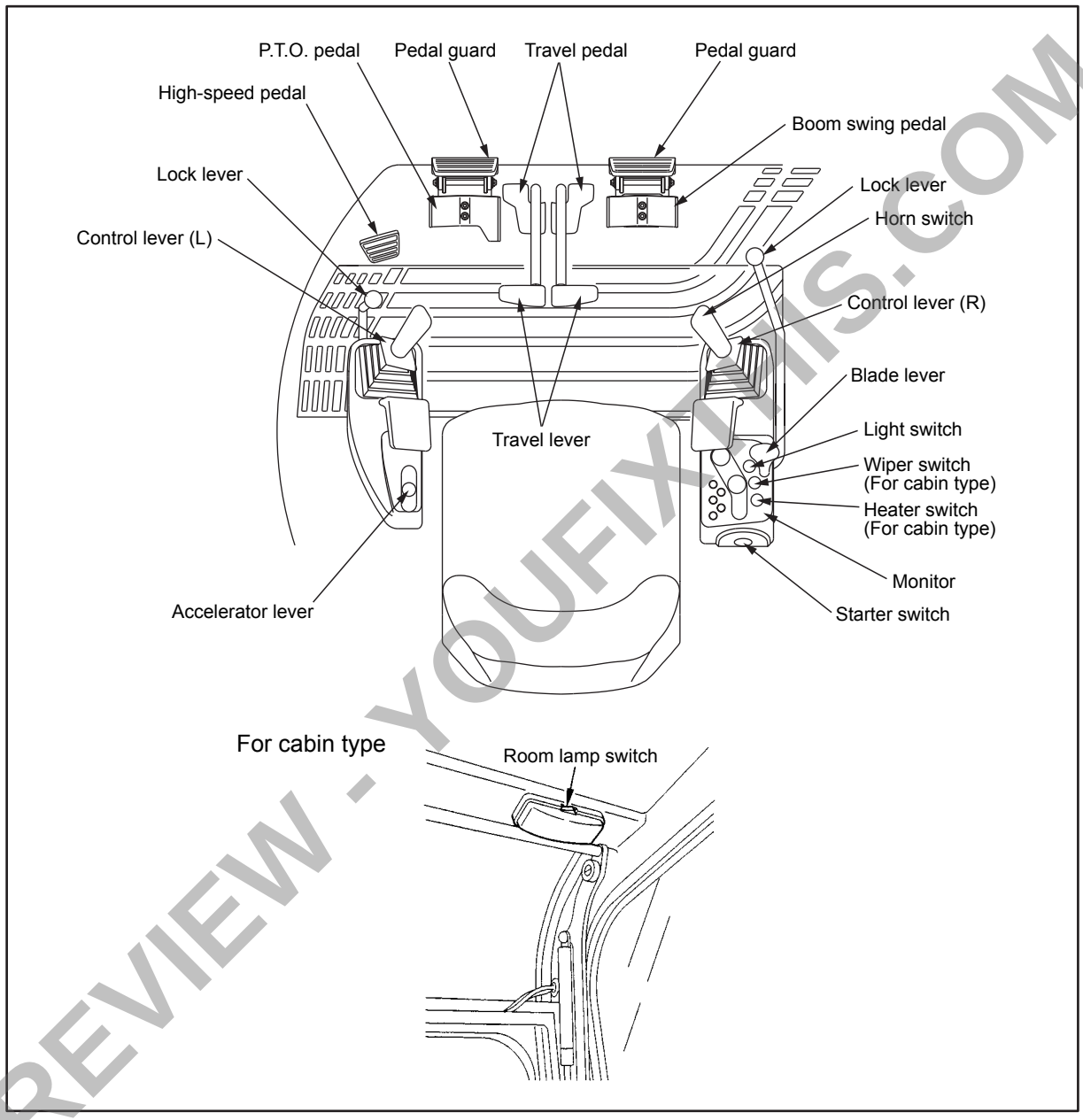

PREVIEW - YOUFIXTHIS.COM

Download full manual at youfixthis.com

11. Identification of Important Parts

11-1. Overview of the machine

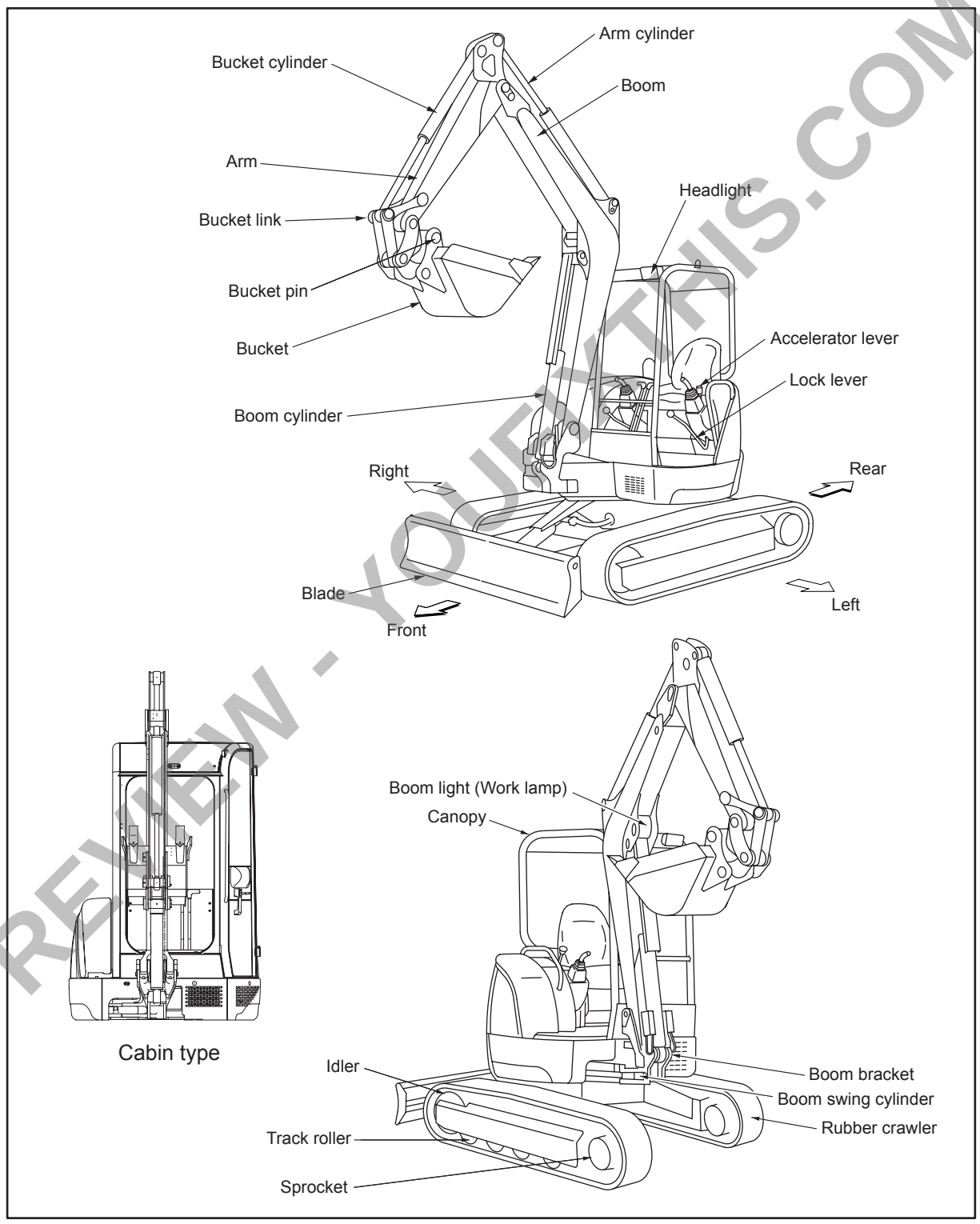

PREVIEW - YOUFIXTHIS.COM

Download full manual at youfixthis.com

20. Consumables

Periodically replace consumable parts such as filter element and bucket teeth.
Periodic replacement prevents malfunction of the machine. When you replace a part, be sure to use a Yanmar genuine part.
When ordering consumables, let us know the parts numbers given in the parts catalog.

List of consumables

The numbers of parts in ( ) represent those which must be replaced at the same time.

Item	Parts number	Name	Q'ty	Replacing time interval
Engine oil filter	119305-35150	Oil filter	1	Every 200 service hours (At first 50 service hours)
Hydraulic oil tank return filter	172175-73710	Filter element	1	Every 500 service hours (At first 250 service hours)
Fuel filter	124550-55700 (24311-240100)	Fuel filter element (O-ring)	1 (1)	Every 400 service hours
Air cleaner	129619-12520	Cleaner element	1	Every 400 service hours
Bucket				-

PREVIEW - YOUFIXTHIS.COM

Download full manual at youfixthis.com

17-4. Troubleshooting

17-4-1. Engine and electrical equipment

- Contact your dealer about the measures shown in parentheses in the list below.
- If there is any abnormality or trouble whose cause is unknown other than those shown below, ask your dealer for repair.

Problem		Cause	Measure
Engine	Steam comes out of top of radiator.	• Shortage of cooling water	• Check cooling water level. Refill, if necessary. (Check cooling water for leak from water port.)
	Water temp alarm lamp lights.	• Loose fan belt	• Adjust belt tension.
		• Buildup of dust and water scale on cooling system	• Replace cooling water. Clean inside of cooling water system.
		• Defective thermostat	• Replace thermostat.
		• Clogged radiator fin or inclined fin	• Clean or repair fin.
		• Defective electrical system	• Check or replace electrical system.
	Turning on starter motor does not start engine.	• Shortage of fuel	• Refill fuel tank.
		• Air mixed in fuel system	• Repair air leak. Release air from fuel system.
		• Defective fuel injection pump or deteriorated nozzle performance	(• Replace pump or nozzle.)
		• Improper compression	(• Check and repair.)
		• Blown out fusible link	• Replace fusible link.
		• Damaged key stop solenoid. Link disengagement	(• Check and repair.)
	Dark fumes come out of machine.	• Clogged air cleaner element	• Clean or repair element.
		• Deteriorated nozzle performance	(• Check and repair.)
		• Improper compression	(• Check and repair.)
	Exhaust color is white or bluish white.	• Too much oil in oil pan	• Drain oil from oil pan to specified level.
		• Improper fuel	• Replace fuel with recommended one.
		• Worn cylinder or piston ring	(• Repair.)
Electrical equipment	Turning starter switch to "START" dose not start starter motor.	• Defective wiring system	• Check and repair wiring system.
		• Defective starter switch	• Replace starter switch.
		• Insufficiently charged battery	• Recharge battery.
		• Defective starter motor	(• Check and repair.)
	Maximum engine speed does not provide enough brightness of lamps.	• Defective wiring system	• Check terminals for looseness and disconnection. Repair terminal, if necessary.
		• Defective generator or regulator	(• Check and repair.)
	During engine operation, lamp is extremely bright, and frequently burns out.	• Defective regulator	(• Replace regulator.)
	Electrolyte leaks from battery.		(• Repair.)
	Speed of starter motor is too low.	• Defective wiring system	• Check and repair wiring system.
		• Insufficiently charged battery	• Recharge battery.
		• Defective starter motor	(• Check and repair.)

PREVIEW - YOUFIXTHIS.COM

Download full manual at youfixthis.com

26. Specifications and Dimensional Diagrams

■ Specifications

Items \ Type	ViO20	
	Rubber crawler	
	Canopy	Cabin

• Weight (in compliance with SAE standards)

Operating mass	lbs. (kg)	4884 (2215)	5116 (2320)
Machine mass (without implement)	lbs. (kg)	3594 (1630)	3826 (1735)

• Working range and performance

Bucket capacity, standard	cu.ft (cu.m)	2.33 (0.066)	
Bucket width, standard	in. (mm)	19.3 (490)	
Maximum digging depth <at down the blade>	in. (mm)	98.6 (2505) <105.9 (2690)>	
Maximum vertical wall digging depth	in. (mm)	82.9 (2105)	
Maximum cutting height	in. (mm)	157.3 (3995)	
Maximum dumping height	in. (mm)	107.8 (2740)	
Maximum digging radius of the ground	in. (mm)	167.6 (4255)	
Front minimum swing radius <at swinging the boom>	in. (mm)	71.5 (1817) <69.8 (1772)>	
Boom swing angle : left / right	degrees	47 / 75	
Maximum digging force (bucket)	lbs. (k•N)	4189.5 (18.6)	
Travel speed : high / low	MPH (km / h)	2.6 (4.2) / 1.2 (2.0)	
Swing speed	rpm	9.5	
Average ground pressure, standard crawler	PSI (kPa)	5.4 (37.2)	5.7 (39.0)
Hydraulic pump displacement	GPM (L / min)	5.70 (21.6)×2 <Variable displacement pump> 5.57 (21.1)×1 <Gear pump>	
System relief set pressure	PSI (MPa)	2986 (20.6)×3, 2422 (16.7)×1	

• Engine

Type	-	Vertical three cycle water-cooled diesel engine
Model	-	3TNE74-ENVE
Rated output/revs	HP (kW) / rpm	17.85 (13.3) / 2400
Displacement	cu.in. (cu.cm)	61.4 (1006)
Compression pressure	PSI (MPa)	497.7 (3.4) at 250 RPM
Nozzle injection pressure	PSI (MPa)	1706 (11.8)
Fan belt (V-belt) size	-	FM35.5
Generator capacity	V / A	12 / 40

• **Battery type and capacity.....65B24L / 12V, 40Ah (5 hours rate capacity)**

PREVIEW - YOUFIXTHIS.COM

Download full manual at youfixthis.com

22-2. Torque table

Bolts or nuts in the metric system should be tightened at the torque described below unless specified otherwise.

Item		Thread size × pitch	Tightening torque ft•lbf (N•m)	Remarks
Hexagon bolt (7T) Nut	Coarse threads	M6 × 1	7.23 to 8.68 (9.8 to 11.8)	1) Apply 80% tightening torque when tightened to aluminum. 2) Apply 60% tightening torque for 4T bolt and lock nut. 3) Use fine thread screws for engine only.
		M8 × 1.25	16.6 to 21.0 (22.6 to 28.4)	
		M10 × 1.5	32.6 to 43.4 (44.1 to 58.8)	
		M12 × 1.75	57.9 to 72.3 (78.5 to 98.1)	
		M14 × 2	86.8 to 108.5 (117.7 to 147.1)	
		M16 × 2	123.0 to 151.9 (166.7 to 206.0)	
		M18 × 2.5	173.6 to 209.8 (235.4 to 284.4)	
		M20 × 2.5	238.7 to 296.6 (323.6 to 402.1)	
	Fine threads	M14 × 1.5	94.0 to 108.5 (127.5 to 147.1)	
		M16 × 1.5	155.5 to 177.2 (210.9 to 240.3)	
PT plug		1/8	7.2 (9.8)	
		1/4	14.5 (19.6)	
		3/8	21.7 (29.4)	
		1/2	43.4 (58.8)	
Pipe joint bolt		M8	9.4 to 12.3 (12.7 to 16.7)	
		M12	18.1 to 25.3 (24.5 to 34.3)	
		M14	28.9 to 36.2 (39.2 to 49.0)	
		M16	36.2 to 43.4 (49.0 to 58.8)	

IMPORTANT

If a part to be tightened is made of resin like a panel board, excessive tightening torque may damage the tightened part. Be careful when tightening.

PREVIEW - YOUFIXTHIS.COM

Download full manual at youfixthis.com

24. Maintenance Table

Daily and periodic inspection are important to keep the machine in its best condition. The following is a summary of inspection and servicing items by inspection interval. Periodic inspection intervals vary depending on the use, loads, fuels and lube oils used and handling conditions, and are hard to establish definitively. The following should be treated only as a general standard.
When the time for an inspection approaches, study the relevant pages in the Operation & Maintenance Manual. Keep a record of daily operation and the results of maintenance work.

24-1. Table of service time intervals

Check and service points	Page
■ **At first 50 hours (only once after the new machine has started to be used)**	
Replacing the engine oil and the engine oil filter element	3-22
Checking and adjusting the fan belt tension	3-22
■ **At first 100 hours (only once after the new machine has started to be used)**	
Checking and adjusting the intake/exhaust valve clearances	3-22
Retightening cylinder head bolts	3-22
Replacing the lube oil for the travel reduction gearbox	3-22
■ **At first 250 hours (only once after the new machine has started to be used)**	
Replacing the hydraulic oil return filter element	3-22
Cleaning the suction filter element in the hydraulic oil tank	3-22
■ **Nonperiodic servicing**	
Checking the rubber crawler (for rubber crawler type)	3-23
Checking and adjusting the rubber crawler tension (for rubber crawler type)	3-25
Replacing the rubber crawler (for rubber crawler type)	3-28
Replacing the bucket teeth	3-31
Cleaning the inside of the cooling system	3-33
■ **Checking before start-up**	
Checking and replenishing the cooling water	3-37
Checking and replenishing the engine oil	3-38
Checking and replenishing the fuel in the fuel tank	3-39
Checking and replenishing the hydraulic oil in the hydraulic oil tank	3-40
Checking and adjusting the fan belt tension	3-41
Checking and replenishing the battery electrolyte	3-41
Greasing	3-42
Checking the electrical equipment	3-43

PREVIEW - YOUFIXTHIS.COM

Download full manual at youfixthis.com

14. Transportation

14-1. Loading and unloading the machine

For safety in transporting the machine, comply with all applicable regulations and laws.

⚠ WARNING

- **Be careful when loading and unloading the machine, because it is a job of high hazard potential.**
- **Load or unload the machine on level, solid ground far away from the shoulder of the road.**
- **Load or unload the machine at a low engine speed.**
- **Use ramp plates of adequate strength having hooks. Check to see that the ramp plates are wide, long, and thick enough to safely sustain the machine so that you can load or unload safely. To prevent the ramp plates from bending too much, support them with blocks.**
- **Securely hook the ramp plates to the deck of the truck so that they will not come off.**
- **Remove mud, grease, and other slippery deposits from the track shoes, and grease, oil, and ice deposits from the ramp plates to prevent the machine from skidding.**
- **Never change the travel direction on the ramp plates. If you need to change the travel direction, go back down on the ramp plates, then do this.**
- **Swing slowly on the truck bed if necessary since the foothold is unstable.**
- **Make sure that the side door of the cabin is locked, whether in the open or closed position. Never open or close the side door on the ramp plates, to prevent it from swinging violently.**

To load or unload the machine, be sure to use the ramp plates and follow the procedure below:

PREVIEW - YOUFIXTHIS.COM

Download full manual at youfixthis.com

PREVIEW ONLY

You're viewing 12 of 222 pages

The full manual includes:

- All 222 pages, complete
- Searchable PDF (find any keyword)
- No watermarks
- Instant download
- Print-ready quality

GET FULL MANUAL NOW

Yanmar ViO20 Operator Manual

Scan or click anywhere
youfixthis.com

Click anywhere on this page to get the full manual