Contents

Fig. No. Fig. Name

LABEL & ACCESSORY

1. LABEL(CABIN)
2. LABEL(CANOPY)
3. LABEL(SAFETY)(CABIN)
4. LABEL(SAFETY)(CANOPY)

ENGINE RELATED

5. MUFFLER
6. AIR CLEANER
7. ACCELERATOR
8. ENGINE MOUNT
9. RADIATOR MOUNT
10. RADIATOR & SUB TANK
11. FUEL TANK
12. FUEL PIPING

ELECTRICAL PARTS

13. BATTERY
14. WIRING
15. EQUIPMENT
16. INSTRUMENT PANEL & STARTER SWITCH
17. QUICK COUPLER(SWITCH BOX)
18. TRAVEL ALARM
19. WORK LAMP & CANOPY LAMP

Fig. No. Fig. Name

AIR CONDITIONER & HEATER

20. HEATER
21. HEATER(PIPING)(TIM CABIN)

TRAVELING

23. SPROCKET & ROLLER
102. (23A)TRACK ROLLER(K SPEC.)
24. IDLER & ADJUST
25. CRAWLER

CONTROL EQUIPMENT

26. LOCK LEVER & STAND(RIGHT)
27. LOCK LEVER & STAND(LEFT)
28. TRAVEL LEVER
29. BLADE LEVER
30. SWING PEDAL
31. LOW-HIGH PEDAL
32. P.T.O. PEDAL
33. CONTROL VALVE PLATE

FRAME

34. TURNING FRAME
35. TRAVEL FRAME & TURNING BEARING

PREVIEW - YOUFIXTHIS.COM

Download full manual at youfixthis.com

Fig.1. LABEL(CABIN)

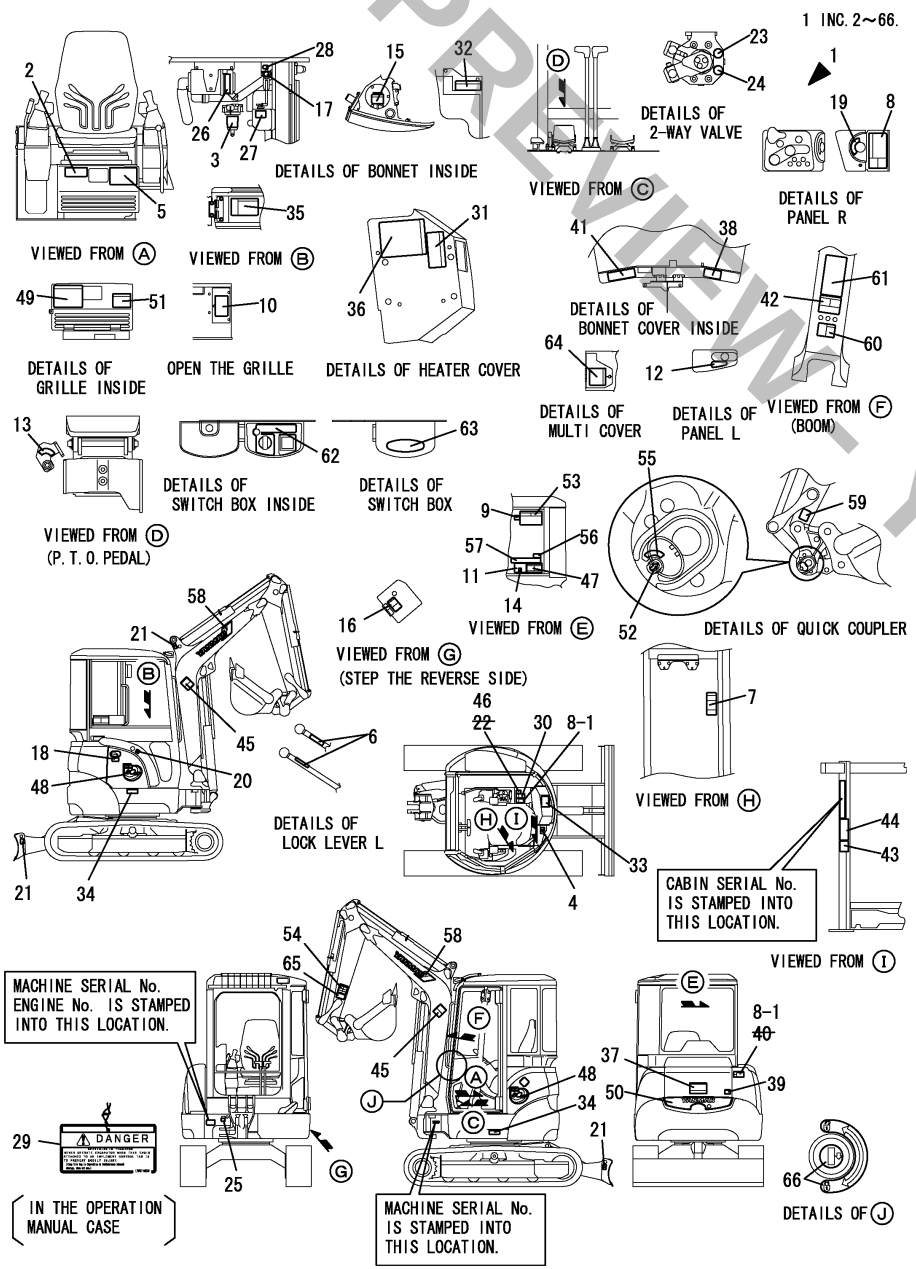

(A)=VIO27-3 C(US)
(B)=VIO27-3 P(US)
(C)=VIO27-3 C(AS)
(D)=VIO27-3 P(AS)
(E)=VIO27-3 C(NZ)
(F)=VIO27-3 P(NZ)

No.	Lev.	Parts No.	Description	Q'ty (A)	(B)	(C)	(D)	(E)	(F)	I	R
1	1	772A37-03120	LABEL SET C(V27-3 US	1		1		1			
2	2	172A37-03110	LABEL,SPECIFICATION	1		1		1			
2-1	2	172A37-03111	LABEL, SPECIFICATION	1		1		1			N
	(A=M/#30739)		(C=M/#30739)					(E=M/#30739)			
3	2	172A07-03160	LABEL	1		1		1			
4	2	172472-03180	LABEL,VENTILATION			1		1			
5	2	172472-03200	LABEL,SUPORT C US	1		1		1			
5-1	2	172472-03141	LABEL, SUPPORT	1		1		1			N
	(A=M/#30778)		(C=M/#30778)					(E=M/#30778)			
6	2	172183-03280	LABEL, LOCK	1		1		1			
7	2	172463-03320	LABEL,F/W LOWER US			1		1			
8	2	172A36-03410	LABEL, ENGINE ROOM	1		1		1			
8-1	2	172A36-03411	LABEL, ENGINE ROOM	2		2		2			K
	(A=M/#31031)		(C=M/#31031)					(E=M/#31031)			
9	2	172437-03550	LABEL,WINDOW	1		1		1			
9-1	2	172437-03551	LABEL, WINDOW US	1		1		1			N
	(A=M/#30778)		(C=M/#30778)					(E=M/#30778)			
10	2	172472-03171	LABEL,FUSE US	1		1		1			
11	2	172490-03200	LABEL, OPERATION	1		1		1			
12	2	172458-03220	LABEL, ACCELERATOR	1		1		1			
13	2	172458-03240	LABEL, LOCK	1		1		1			
14	2	172496-03250	LABEL, PTO	1		1		1			
15	2	172463-03290	LABEL, HYD.OIL	1		1		1			
16	2	172438-03300	LABEL, PTO SELECT	1		1		1			
17	2	172462-03320	LABEL, RADIATOR	1		1		1			
18	2	172463-03330	LABEL,COVER	1		1		1			
19	2	172141-03360	LABEL, START SWITCH	1		1		1			
20	2	172437-03500	LABEL, FUEL	1		1		1			
20-1	2	172437-03501	LABEL, FUEL	1		1		1			N
	(A=M/#30778)		(C=M/#30778)					(E=M/#30778)			
21	2	172437-03510	LABEL, HOOK	4		4		4			
21-1	2	172437-03511	LABEL, HOOK	4		4		4			N
	(A=M/#30778)		(C=M/#30778)					(E=M/#30778)			
21-2	2	172437-03511	LABEL, HOOK	3		3		3			K
	(A=M/#30501)		(C=M/#30501)					(E=M/#30501)			
22	2	172437-03530	LABEL,RE-START	1		1		1			Z
	(A=M/#30778)		(C=M/#30778)					(E=M/#30778)			
23	2	172437-03610	LABEL	1		1		1			
24	2	172437-03620	LABEL	1		1		1			
25	2	172157-03740	LABEL	1		1		1			
25-1	2	172157-03741	LABEL, GREASE US	1		1		1			N
	(A=M/#30778)		(C=M/#30778)					(E=M/#30778)			
26	2	172125-03950	LABEL, AIR CLEANER	1		1		1			
26-1	2	172125-03951	LABEL, AIR CLEANER	1		1		1			N
	(A=M/#30778)		(C=M/#30778)					(E=M/#30778)			
27	2	124764-44810	LABEL, SUB TANK	1		1		1			
27-1	2	172A38-03200	LABEL, SUB-TANK US	1		1		1			N
	(A=M/#30778)		(C=M/#30778)					(E=M/#30778)			
27-2	2	172A38-03201	LABEL, SUB TANK	1		1		1			N
	(A=M/#31282)		(C=M/#31282)					(E=M/#31282)			
28	2	124764-44920	LABEL, ANTI-FREEZING	1		1		1			

Remarks
(1)Rubber crawler specification.

N:Old ⇔(Yes/No) New, Q:Old ⇔(No/Yes) New, R:Old ⇔(Yes/Yes) New, S:Old ⇔(No/No) New, W:Add, Z:Discontinued, F:Interchangeable by set, K:Q'ty Change

++ CONTINUE ++

Copyright (C) YANMAR CO., LTD. All RightsReserved.

PREVIEW - YOUFIXTHIS.COM
Download full manual at youfixthis.com

Fig.31. LOW-HIGH PEDAL

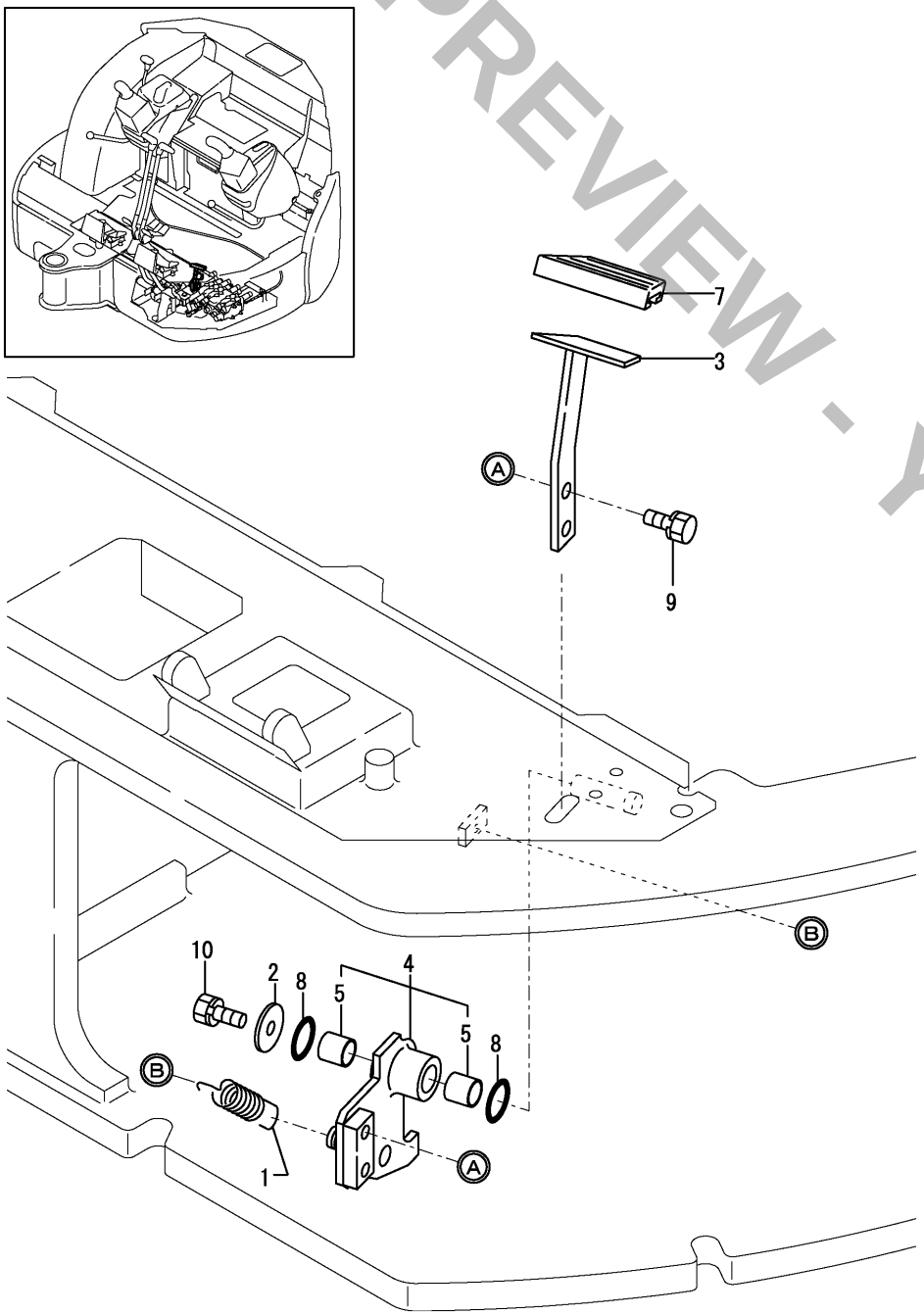

(A)=VIO27-3 C(US)
(B)=VIO27-3 P(US)
(C)=VIO27-3 C(AS)
(D)=VIO27-3 P(AS)
(E)=VIO27-3 C(NZ)
(F)=VIO27-3 P(NZ)

No.	Lev.	Parts No.	Description	Q'ty (A)	(B)	(C)	(D)	(E)	(F)	I	R
1	1	172162-12480	SPRING, RETURN	1	1	1	1	1	1		
2	1	1A1040-43900	WASHER, SPRING	1	1	1	1	1	1		
3	1	172487-45900	PEDAL, LO-HIGH	1	1	1	1	1	1		
4	1	172458-45920	BRACKET, PEDAL	1	1	1	1	1	1		
5	2	172141-41360	BUSH	2	2	2	2	2	2		
7	1	172458-45950	PAD, PEDAL	1	1	1	1	1	1		
8	1	24311-000210	O-RING, 1AP21.0	2	2	2	2	2	2		
9	1	26013-080162	BOLT, M8X 16	2	2	2	2	2	2		
10	1	26013-080202	BOLT, M8X 20	1	1	1	1	1	1		

N:Old $\overset{\text{Yes}}{\underset{\text{No}}{\leftrightarrows}}$ New, Q:Old $\overset{\text{No}}{\underset{\text{Yes}}{\leftrightarrows}}$ New, R:Old $\overset{\text{Yes}}{\underset{\text{Yes}}{\leftrightarrows}}$ New, S:Old $\overset{\text{No}}{\underset{\text{No}}{\leftrightarrows}}$ New, W:Add, Z:Discontinued, F:Interchangeable by set, K:Q'ty Change

Copyright (C) YANMAR CO., LTD. All RightsReserved.

PREVIEW - YOUFIXTHIS.COM

Download full manual at youfixthis.com

Fig.8. ENGINE MOUNT

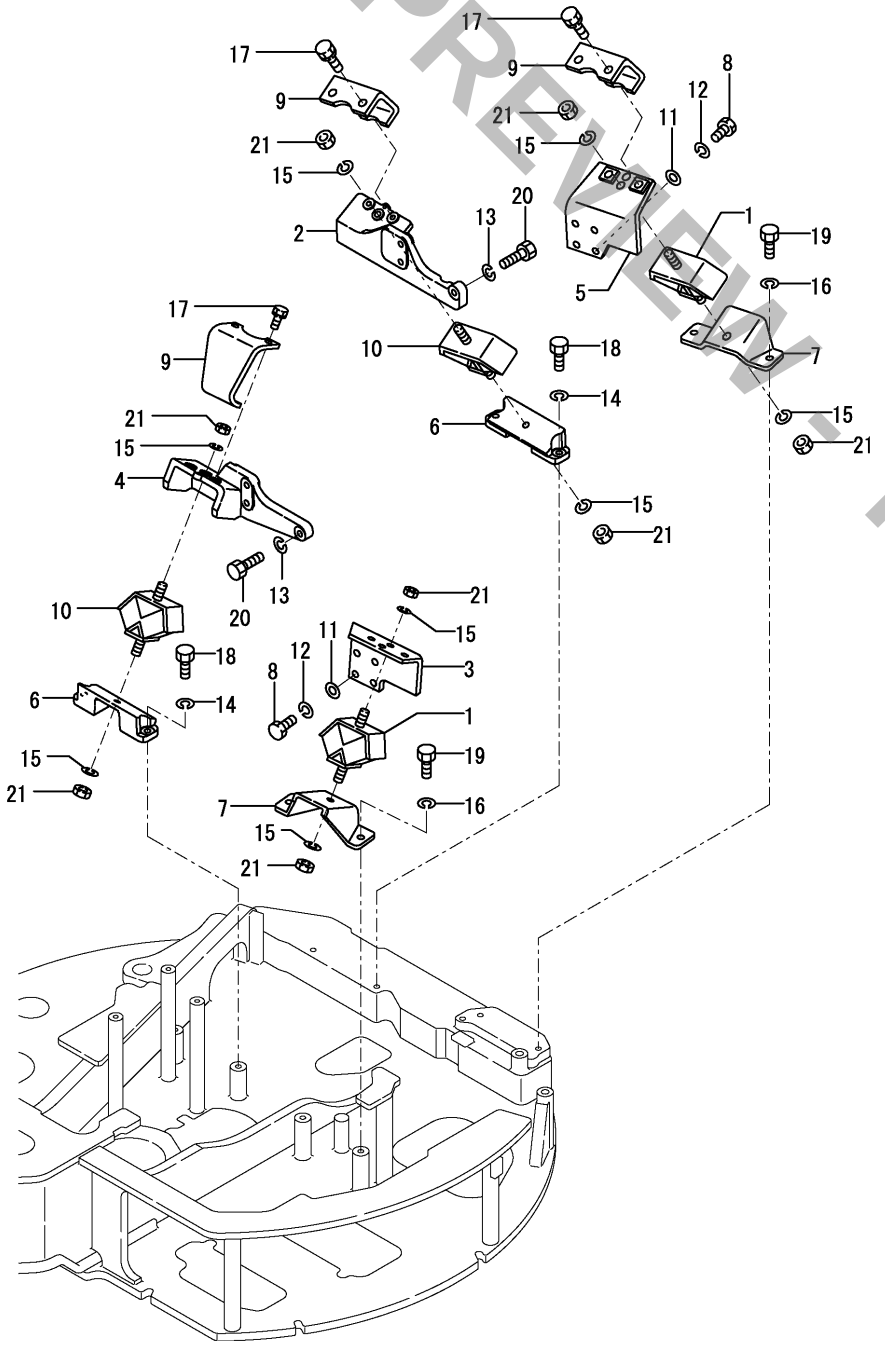

(A)=VIO27-3 C(US)
(B)=VIO27-3 P(US)
(C)=VIO27-3 C(AS)
(D)=VIO27-3 P(AS)
(E)=VIO27-3 C(NZ)
(F)=VIO27-3 P(NZ)

No.	Lev.	Parts No.	Description	Q'ty (A)	(B)	(C)	(D)	(E)	(F)	I	R
1	1	196420-02310	RUBBER, ABSORBER 230	2	2	2	2	2	2		
2	1	172458-13100	MOUNT, ENGINE	1	1	1	1	1	1		
3	1	172175-13110	PLATE	1	1	1	1	1	1		
4	1	172458-13110	MOUNT, ENGINE	1	1	1	1	1	1		
5	1	172490-13110	BRACKET	1	1	1	1	1	1		
6	1	172458-13120	BRACKET, ENGINE	2	2	2	2	2	2		
7	1	172490-13150	BRACKET, ENGINE	2	2	2	2	2	2		
8	1	172162-13200	BOLT	8	8	8	8	8	8		
9	1	172124-13230	STOPPER, ENGINE	3	3	3	3	3	3		
10	1	172168-13250	ABSORBER, SHOCK	2	2	2	2	2	2		
11	1	172137-46040	SEAT, SPRING	8	8	8	8	8	8		
11-1	1	172137-46041	SEAT, SPRING	8	8	8	8	8	8	N	
	(A=M/#35253)	(B=M/#35253)	(C=M/#35253)	(D=M/#35253)	(E=M/#35253)		(F=M/#35253)				
12	1	22217-100000	WASHER, SPRING 10	8	8	8	8	8	8		
13	1	22217-120000	WASHER, SPRING 12	6	6	6	6	6	6		
14	1	22217-120000	WASHER, SPRING 12	4	4	4	4	4	4		
15	1	22217-120000	WASHER, SPRING 12	8	8	8	8	8	8		
16	1	22217-120000	WASHER, SPRING 12	4	4	4	4	4	4		
17	1	26013-100252	BOLT, M10X 25	6	6	6	6	6	6		
18	1	26076-120352	BOLT, 10.912X 35	4	4	4	4	4	4		
19	1	26076-120352	BOLT, 10.912X 35	4	4	4	4	4	4		
20	1	26076-120402	BOLT, 10.912X 40	6	6	6	6	6	6		
21	1	26716-120002	NUT, M12	8	8	8	8	8	8		

N:Old $\overset{\text{Yes}}{\underset{\text{No}}{\leftrightarrows}}$ New, Q:Old $\overset{\text{No}}{\underset{\text{Yes}}{\leftrightarrows}}$ New, R:Old $\overset{\text{Yes}}{\underset{\text{Yes}}{\leftrightarrows}}$ New, S:Old $\overset{\text{No}}{\underset{\text{No}}{\leftrightarrows}}$ New, W:Add, Z:Discontinued, F:Interchangeable by set, K:Q'ty Change

Copyright (C) YANMAR CO., LTD. All RightsReserved.

PREVIEW - YOUFIXTHIS.COM

Download full manual at youfixthis.com

Fig.14. WIRING

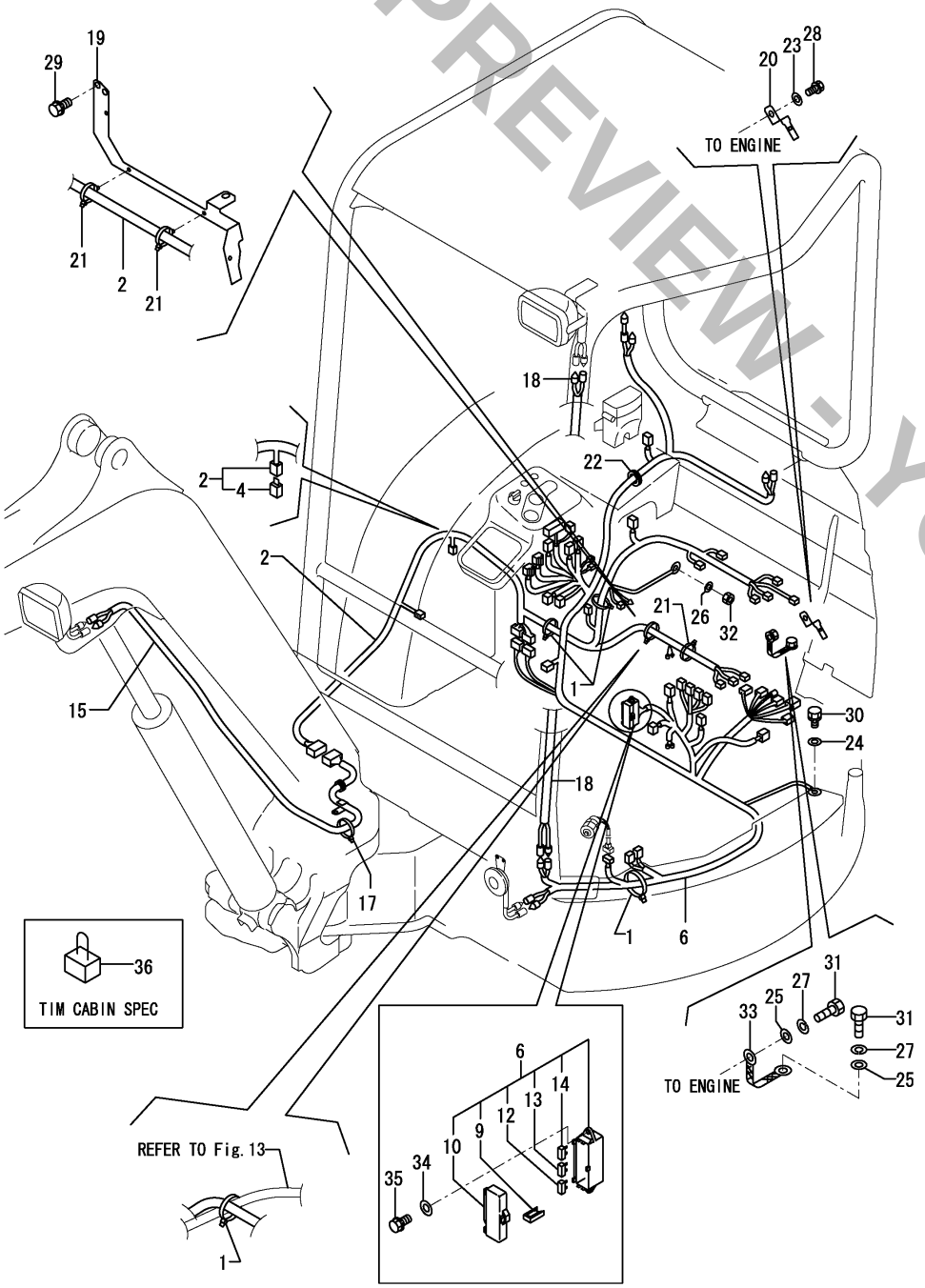

(A)=VIO27-3 C(US) (D)=VIO27-3 P(AS)
(B)=VIO27-3 P(US) (E)=VIO27-3 C(NZ)
(C)=VIO27-3 C(AS) (F)=VIO27-3 P(NZ)

No.	Lev.	Parts No.	Description	Q'ty (A)	(B)	(C)	(D)	(E)	(F)	I	R
1	1	172126-11510	BAND	4	4	4	4	4	4		
2	1	172A25-16500	HARNESS ASSY, WIRE	1	1	1	1	1	1		
4	2	172458-16550	FUSE, SLOWBLOW	1	1	1	1	1	1		
6	1	172A37-16520	HARNESS ASSY, WIRE	1	1	1	1	1	1		
9	2	172175-17120	PULLER	1	1	1	1	1	1		
10	2	172187-17220	COVER	1	1	1	1	1	1		
12	2	29420-050000	FUSE, B 5A	2	2	2	2	2	2		
13	2	29420-150000	FUSE, B 15A	6	6	6	6	6	6		
14	2	29420-300000	FUSE, B 30A	2	2	2	2	2	2		
15	1	172458-16531	HARNESS, LAMP	1	1	1	1	1	1		
17	1	172137-16560	BAND	2	2	2	2	2	2		
18	1	172458-16561	HARNESS,CANOPY LAMP				1		1		
18-1	1	172458-16562	HARNESS, LAMP				1		1	I	N
			(D=M/#30666)					(F=M/#30666)			
19	1	172A23-16600	SUPPORT ASSY	1	1	1	1	1	1		
20	1	172460-16700	STAY	1	1	1	1	1	1		
21	1	194680-51670	BAND, CLIP	4	4	4	4	4	4		
22	1	172958-64500	PLUG	1	1	1	1	1	1		
22-1	1	172458-64590	PLUG	1	1	1	1	1	1	I	N
	(A=M/#30901)		(B=M/#30901) (C=M/#30901) (D=M/#30901)	(E=M/#30901)				(F=M/#30901)			
23	1	22137-080000	WASHER, 8	1	1	1	1	1	1		
24	1	22137-100000	WASHER, 10	1	1	1	1	1	1		
25	1	22137-120000	WASHER, 12	2	2	2	2	2	2		
26	1	22217-060000	WASHER, SPRING 6	1	1	1	1	1	1		
27	1	22217-120000	WASHER, SPRING 12	2	2	2	2	2	2		
28	1	26013-080162	BOLT, M8X 16	1	1	1	1	1	1		
29	1	26013-100162	BOLT, M10X 16	2	2	2	2	2	2		
30	1	26013-100202	BOLT, M10X 20	1	1	1	1	1	1		
31	1	26116-120162	BOLT, M12X 16 PLATED	2	2	2	2	2	2		
32	1	26716-060002	NUT, M6	1	1	1	1	1	1		
33	1	933171-15801	CORD, ENGINE EARTH	1	1	1	1	1	1		
34	1	22137-060000	WASHER, 6	2	2	2	2	2	2		
35	1	26013-060202	BOLT, M6X 20	2	2	2	2	2	2		
36	1	172190-16500	HARNESS, WIRE	1							

N:Old $\overset{\text{Yes}}{\underset{\text{No}}{\leftrightarrows}}$ New, Q:Old $\overset{\text{No}}{\underset{\text{Yes}}{\leftrightarrows}}$ New, R:Old $\overset{\text{Yes}}{\underset{\text{Yes}}{\leftrightarrows}}$ New, S:Old $\overset{\text{No}}{\underset{\text{No}}{\leftrightarrows}}$ New, W:Add, Z:Discontinued, F:Interchangeable by set, K:Q'ty Change

Copyright (C) YANMAR CO., LTD. All RightsReserved.

PREVIEW - YOUFIXTHIS.COM

Download full manual at youfixthis.com

Fig.23. SPROCKET & ROLLER

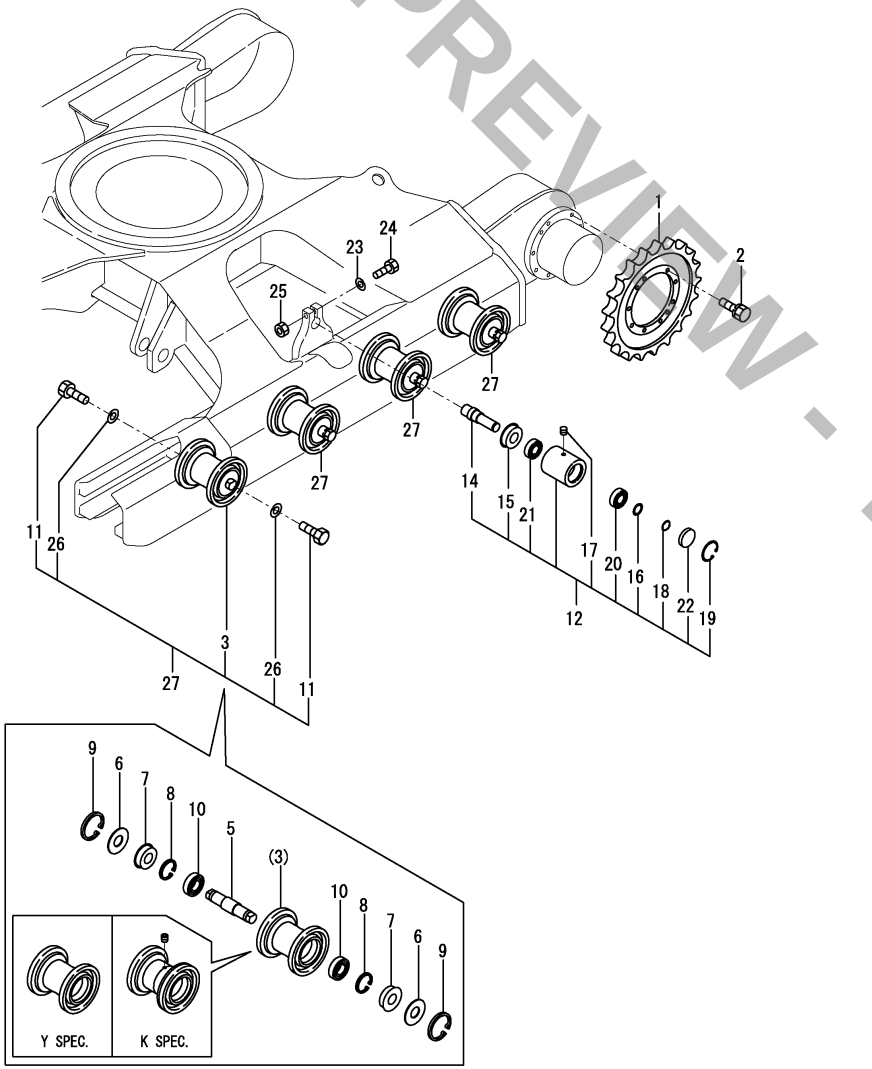

(A)=VIO27-3 C(US)
(B)=VIO27-3 P(US)
(C)=VIO27-3 C(AS)
(D)=VIO27-3 P(AS)
(E)=VIO27-3 C(NZ)
(F)=VIO27-3 P(NZ)

No.	Lev.	Parts No.	Description	Q'ty (A)	(B)	(C)	(D)	(E)	(F)	I	R
1	1	172457-29100-1	SPROCKET	2	2	2	2	2	2		
2	1	26013-100252	BOLT, M10X 25	24	24	24	24	24	24		
3	1	172441-37301-1	ROLLER, TRUCK	8	8	8	8	8	8		
3-1	1	172441-37302	ROLLER ASSY,TRACK	8					8	N	
	(A=MZZZZZ)							(F=MZZZZZ)			
3-2	1	172441-37302	ROLLER ASSY,TRACK	8	8	8	8	8	8	Z	3
	(A=*2014.05)	(B=*2014.05)	(C=*2014.05)	(D=*2014.05)				(E=*2014.05)	(F=*2014.05)		
5	2	172422-37310	SHAFT, ROLLER	8	8	8	8	8	8		
6	2	172141-37320	SPACER	16	16	16	16	16	16		
7	2	1A1030-48250	SEAL,OIL QLF30621218	16	16	16	16	16	16		
8	2	22252-000620	RING, 62	16	16	16	16	16	16		
9	2	22252-000750	RING, 75	16	16	16	16	16	16		
10	2	933111-73800	BEARING, BALL	16	16	16	16	16	16		
11	1	172490-37310	BOLT	16	16	16	16	16	16		
11-1	1	172490-37320	BOLT	16	16	16	16	16	16	F	1
	(A=M/#30718)	(B=M/#30718)	(C=M/#30718)	(D=M/#30718)				(E=M/#30718)	(F=M/#30718)		
12	1	172458-37500-1	ROLLER ASSY, CARRIER	2	2	2	2	2	2		
14	2	172458-37570	SHAFT	2	2	2	2	2	2		
15	2	172458-37580	SEAL, OIL	2	2	2	2	2	2		
16	2	172458-37590	COLLAR	2	2	2	2	2	2		
17	2	194630-42120	PLUG, PT1/8	2	2	2	2	2	2		
18	2	22242-000250	RING, 25	2	2	2	2	2	2		
19	2	22252-000521	RING, 52	2	2	2	2	2	2		
20	2	24101-062054	BEARING, BALL 6205	2	2	2	2	2	2		
21	2	24102-062054	BEARING, BALL 6205U	2	2	2	2	2	2		
22	2	27260-520000	PLUG, 52	2	2	2	2	2	2		
23	1	22217-140000	WASHER, SPRING 14	2	2	2	2	2	2		
24	1	26116-140652	BOLT, M14X 65 PLATED	2	2	2	2	2	2		
25	1	26716-140002	NUT, M14	2	2	2	2	2	2		
26	1	22217-160000	WASHER, SPRING 16	16	16	16	16	16	16	W	
	(A=M/#30718)	(B=M/#30718)	(C=M/#30718)	(D=M/#30718)				(E=M/#30718)	(F=M/#30718)		
27	1	772441-37300-1	ROLLER ASSY, TRUCK	8	8	8	8	8	8	W	2
	(A=M/#XXXXX)	(B=M/#XXXXX)	(C=M/#XXXXX)	(D=M/#XXXXX)				(E=M/#XXXXX)	(F=M/#XXXXX)		
27-1	1	772441-37300-1	ROLLER ASSY, TRUCK	8	8	8	8	8	8	Z	
	(A=*2014.05)	(B=*2014.05)	(C=*2014.05)	(D=*2014.05)				(E=*2014.05)	(F=*2014.05)		

Remarks
(1)Interchangeable by simultaneous replacement with No.26.
(2)Include No.3, 11-1 & 26.
(3)Y specification. Interchangeable with Fig.102(23A) No.1. The inner parts are not compatib

N:Old $\overset{\text{Yes}}{\underset{\text{No}}{\leftrightarrows}}$ New, Q:Old $\overset{\text{No}}{\underset{\text{Yes}}{\leftrightarrows}}$ New, R:Old $\overset{\text{Yes}}{\underset{\text{Yes}}{\leftrightarrows}}$ New, S:Old $\overset{\text{No}}{\underset{\text{No}}{\leftrightarrows}}$ New, W:Add, Z:Discontinued, F:Interchangeable by set, K:Q'ty Change

Copyright (C) YANMAR CO., LTD. All RightsReserved.

PREVIEW - YOUFIXTHIS.COM

Download full manual at youfixthis.com

Fig.44. SEAT & SEAT MOUNT(CANOPY)

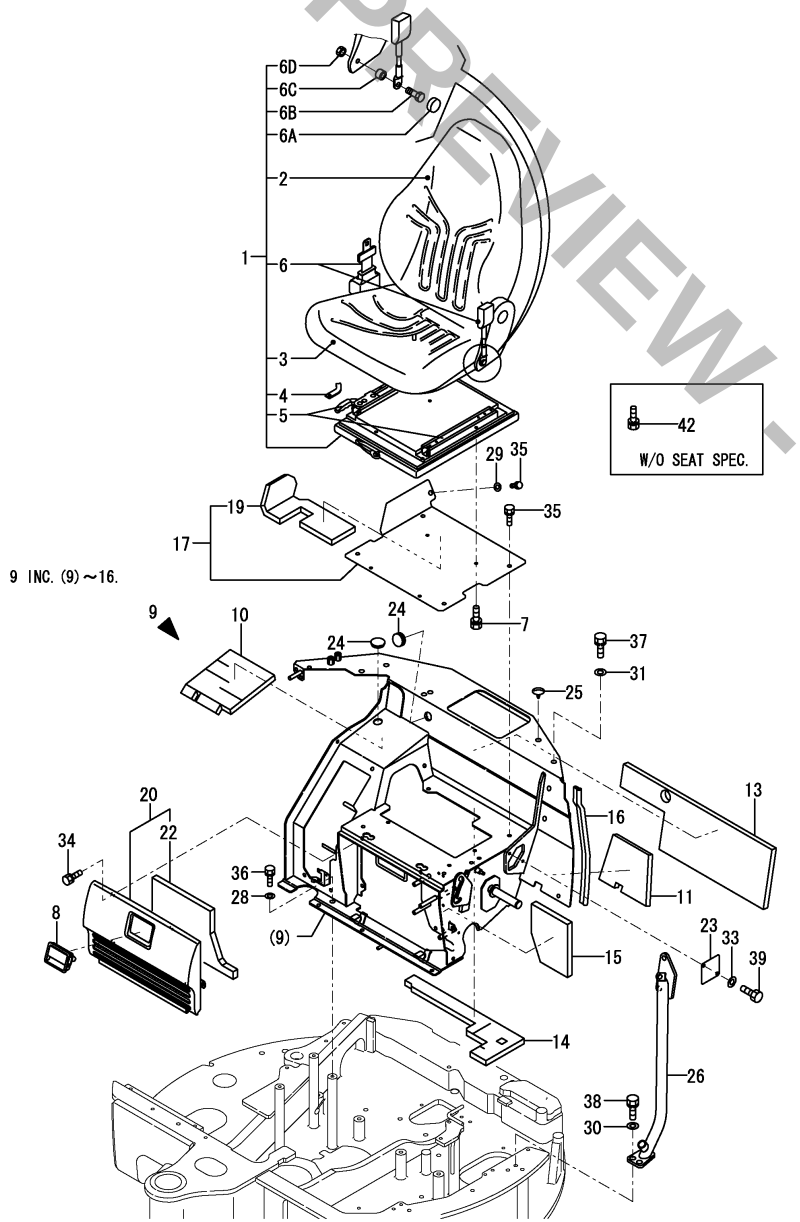

(A)=VIO27-3 C(US)
(B)=VIO27-3 P(US)
(C)=VIO27-3 C(AS)
(D)=VIO27-3 P(AS)
(E)=VIO27-3 C(NZ)
(F)=VIO27-3 P(NZ)

No.	Lev.	Parts No.	Description	Q'ty (A)	(B)	(C)	(D)	(E)	(F)	I	R
39	1	26116-080162	BOLT, M8X 16 PLATED		2		2		2		
42	1	26013-080162	BOLT, M8X 16		4						
43A	1	172472-03171	LABEL,FUSE US		1		1		1		3
43B	1	172437-03530	LABEL,RE-START		1		1		1	Z	3
		(B=M/#30778)	(D=M/#30778)						(F=M/#30778)		
43C	1	172437-03300	LABEL,MANUAL		1		1		1		3
43C-1	1	172437-03301	LABEL, MANUAL US		1		1		1	N	3
		(B=M/#30778)	(D=M/#30778)						(F=M/#30778)		
43C-2	1	172437-03302	LABEL, MANUAL		1		1		1	N	3
		(B=M/#31282)	(D=M/#31282)						(F=M/#31282)		
43D	1	172437-03470	LABEL,LEVER LOCK		1		1		1		3
43D-1	1	172437-03471	LABEL, LEVER LOCK		1		1		1	N	3
		(B=M/#30778)	(D=M/#30778)						(F=M/#30778)		
43E	1	172A36-03411	LABEL, ENGINE ROOM		1		1		1	W	3
		(B=M/#31031)	(D=M/#31031)						(F=M/#31031)		
44A	1	172A37-03110	LABEL,SPECIFICATION		1		1		1		3
44A-1	1	172A37-03111	LABEL, SPECIFICATION		1		1		1	N	3
		(B=M/#30739)	(D=M/#30739)						(F=M/#30739)		
44B	1	172472-03140	LABEL,SUPORT US		1		1		1		3
44B-1	1	172472-03141	LABEL, SUPPORT		1		1		1	N	3
		(B=M/#30778)	(D=M/#30778)						(F=M/#30778)		
44C	1	172472-03150	LABEL,OIL&WATER		1		1		1		3
44D	1	172472-03160	LABEL,GREASE		1		1		1		3

Remarks
(1)Attach the No.43A, 43B, 43C, 43D & 43E label to this part.
(2)Attach the No.44A, 44B, 44C & 44D label to this part.
(3)Label is not illustrated.

N:Old $\overset{\text{Yes}}{\underset{\text{No}}{\rightleftarrows}}$ New, Q:Old $\overset{\text{No}}{\underset{\text{Yes}}{\rightleftarrows}}$ New, R:Old $\overset{\text{Yes}}{\underset{\text{Yes}}{\rightleftarrows}}$ New, S:Old $\overset{\text{No}}{\underset{\text{No}}{\rightleftarrows}}$ New, W:Add, Z:Discontinued, F:Interchangeable by set, K:Q'ty Change

Copyright (C) YANMAR CO., LTD. All RightsReserved.

PREVIEW - YOUFIXTHIS.COM

Download full manual at youfixthis.com

Fig.71. TURNING MOTOR

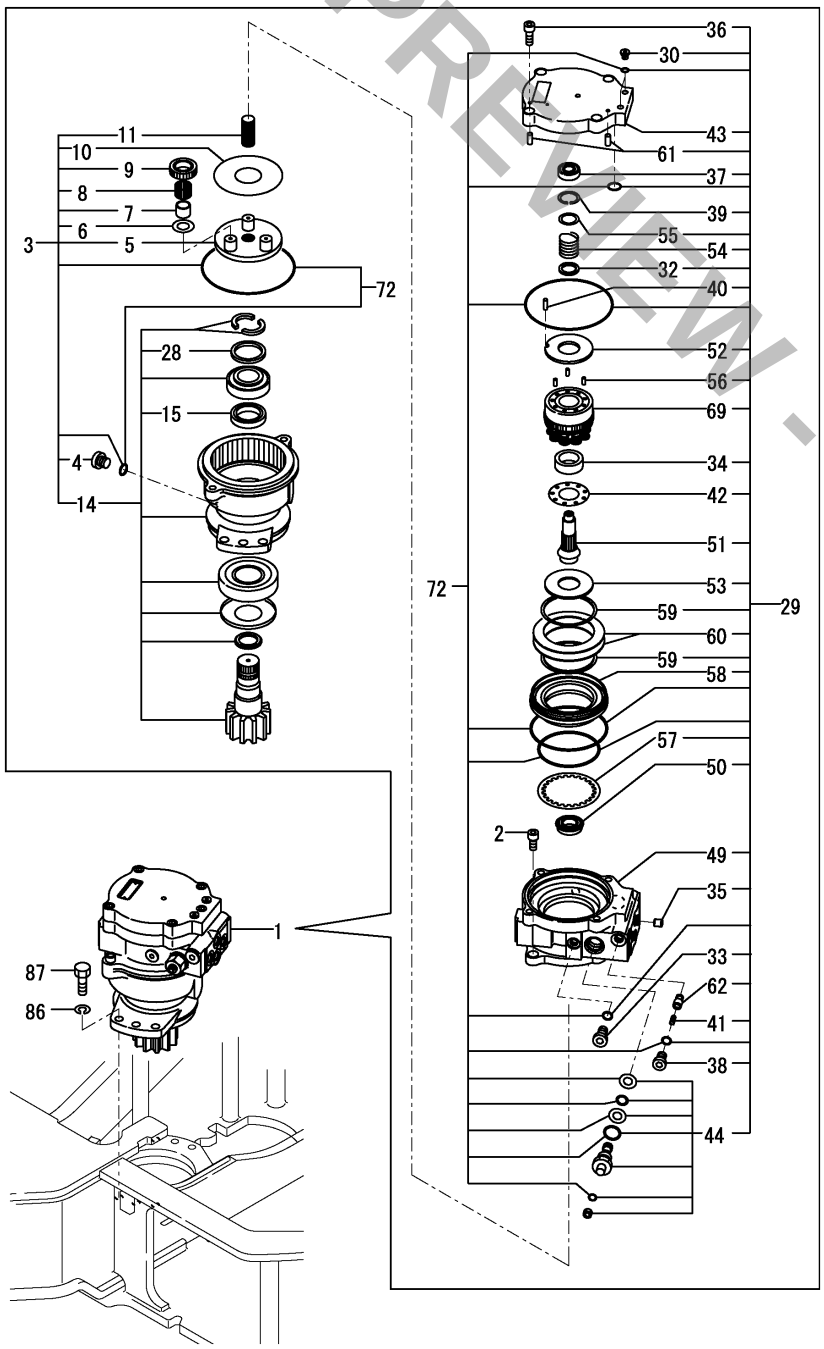

(A)=VIO27-3 C(US)
(B)=VIO27-3 P(US)
(C)=VIO27-3 C(AS)
(D)=VIO27-3 P(AS)
(E)=VIO27-3 C(NZ)
(F)=VIO27-3 P(NZ)

No.	Lev.	Parts No.	Description	Q'ty (A)	(B)	(C)	(D)	(E)	(F)	I	R
1	1	172457-73711	MOTOR ASSY, SWING	1	1	1	1	1	1		
2	2	172124-70390	BOLT, SOCKET	2	2	2	2	2	2		
3	2	172458-73400	GEAR ASSY, REDUCTION	1	1	1	1	1	1		
4	3	1A6240-37360	PLUG	1	1	1	1	1	1		
5	3	172450-73830	COLLAR	1	1	1	1	1	1		
6	3	172450-73850	WASHER, THRUST	3	3	3	3	3	3		
7	3	172450-73860	RACE, INNER	3	3	3	3	3	3		
8	3	172450-73870	BEARING, NEEDLE	3	3	3	3	3	3		
9	3	172458-73970	GEAR, PLANETARY	3	3	3	3	3	3		
10	3	172458-73980	PLATE,THRUST	1	1	1	1	1	1		
11	3	172458-73990	GEAR, DRIVE	1	1	1	1	1	1		
14	3	172458-74350	HOUSING ASSY	1	1	1	1	1	1		
15	4	172450-73750	SEAL, OIL	1	1	1	1	1	1		
28	4	172458-73960	COLLAR	1	1	1	1	1	1		
29	2	172457-73410	MOTOR ASSY, PISTON	1	1	1	1	1	1		
30	3	1A6240-37360	PLUG	2	2	2	2	2	2		
32	3	172147-70280	COLLAR	1	1	1	1	1	1		
33	3	172148-70301	PLUG	1	1	1	1	1	1		
34	3	172147-70330	HOLDER, RETAINER	1	1	1	1	1	1		
35	3	172124-70380	ORIFICE	1	1	1	1	1	1		
36	3	172124-70390	BOLT, SOCKET	5	5	5	5	5	5		
37	3	172147-70390	BEARING, BALL	1	1	1	1	1	1		
38	3	172147-70500	PLUG	2	2	2	2	2	2		
39	3	172122-70630	RING, SNAP	1	1	1	1	1	1		
40	3	172122-73470	PIN	1	1	1	1	1	1		
41	3	172638-73470	SPRING	2	2	2	2	2	2		
42	3	172423-73530	PLATE, RETAINER	1	1	1	1	1	1		
43	3	172459-73740	COVER	1	1	1	1	1	1		
44	3	172457-73780	VALVE ASSY, RELIEF	2	2	2	2	2	2		
49	3	172458-74300	CASE	1	1	1	1	1	1		
50	3	172458-74310	BALL BEARING	1	1	1	1	1	1		
51	3	172458-74320	SHAFT	1	1	1	1	1	1		
52	3	172458-74330	PLATE, VALVE	1	1	1	1	1	1		
53	3	172450-77050	PLATE, THRUST	1	1	1	1	1	1		
54	3	172450-77070	SPRING	1	1	1	1	1	1		
55	3	172450-77080	WASHER	1	1	1	1	1	1		
56	3	172450-77090	PIN	3	3	3	3	3	3		
57	3	172450-77110	DISK	1	1	1	1	1	1		
58	3	172450-77120	PISTON, BRAKE	1	1	1	1	1	1		
59	3	172450-77130	SEAT, SPRING	2	2	2	2	2	2		
60	3	172450-77140	SPRING ASSY, DISK	1	1	1	1	1	1		
61	3	172450-77170	PIN	2	2	2	2	2	2		
62	3	172450-77190	VALVE, CHECK	2	2	2	2	2	2		
69	3	172450-77220	BLOCK KIT, CYLINDER	1	1	1	1	1	1		
72	1	172458-74910	REPAIR KIT	1	1	1	1	1	1		
86	1	22217-140000	WASHER, SPRING 14	6	6	6	6	6	6		
87	1	26116-140452	BOLT, M14X 45 PLATED	6	6	6	6	6	6		

N:Old $\overset{\text{Yes}}{\underset{\text{No}}{\rightleftarrows}}$ New, Q:Old $\overset{\text{No}}{\underset{\text{Yes}}{\rightleftarrows}}$ New, R:Old $\overset{\text{Yes}}{\underset{\text{Yes}}{\rightleftarrows}}$ New, S:Old $\overset{\text{No}}{\underset{\text{No}}{\rightleftarrows}}$ New, W:Add, Z:Discontinued, F:Interchangeable by set, K:Q'ty Change

Copyright (C) YANMAR CO., LTD. All RightsReserved.

PREVIEW - YOUFIXTHIS.COM

Download full manual at youfixthis.com

Parts No. Index

Parts No.	Fig. No.	Ref. No.
104200-11920	11	17
106990-44660	11	26
119247-77100	15	5
119650-77910	15	7
119802-55710	12	18
119802-77200	15	6
119808-12520	6	5
119808-12540	6	6
120147-44810	22	14
121250-49121	10	6
121450-44531	10	20
121468-44510	10	18
121468-44540	10	21
121470-44581	10	23
124450-44560	10	22
124465-44950	20	20
	21	7
124764-44810	1	27
	2	24
	10	43 A
124764-44920	1	28
	2	25
	34	39 A
124766-59050	10	26
		41
	12	22
129100-55690	12	17
129107-44590	10	9
129211-77920	15	8
129457-44520	10	16 -1
129457-44530	10	41 -1
129612-12560	6	7
129612-52100	12	15
172020-10620	96	3
172068-28490	28	30
		38
	32	1
172110-36010	87	22
172110-45050	28	33
		41
172110-76170-1	91	8
172112-87860	101	2
172113-12522	7	5
172116-76381	85	10
172117-83970-6	95	19
172122-37830	24	14
		35
172122-37844	24	15
		36
172122-46590	28	24

Parts No.	Fig. No.	Ref. No.
172122-46590	30	30
	32	31
172122-57610	35	12
172122-57620	35	13
172122-57630	35	10
172122-57640	35	11
172122-70350	63	7
	70	53
		54
172122-70630	71	39
172122-73430	70	62
172122-73470	70	10
	71	40
172122-73480	63	28
		29
	70	11
172122-79930	7	8
	12	23
	89	17
	93	28
		29
172122-82290	98	8
172123-76121	84	4
	88	5
	91	1
	92	1
	93	1
		2
		3
172124-13230	8	9
172124-17640	20	15
	21	5
172124-46200	27	3
	28	16
	30	9
	32	30
	99	3
172124-65480	46	17
172124-70380	71	35
172124-70390	71	2
		36
172124-94310-2	101	9
172125-03950	1	26
	2	23
	6	19 A
172125-03951	1	26 -1
	2	23 -1
	6	19 A-1
172125-76900	90	10
172126-11510	14	1

Parts No.	Fig. No.	Ref. No.
172126-11510	20	1
		2
	61	1
	85	17
		18
	96	1
172126-16540	20	4
172137-12270	7	4
172137-16560	12	13
	14	17
172137-17631	20	13
	21	3
172137-46040	8	11
	65	1
	66	1
172137-46041	8	11 -1
	65	1 -1
	66	1 -1
172137-46210	17	9
172137-69850	41	19
		22
172137-73860	72	5
172137-76110	86	1
172137-76580	91	9
172141-03360	1	19
	2	16
	16	50 A
172141-13490	20	3
	21	1
172141-37320	23	6
	102	3
172141-41340	28	1
172141-41360	26	5
	30	5
	31	5
172141-41370	27	6
	28	3
		6
	30	2
	32	23
		26
172141-50762-2	36	1
172141-50763-4	36	1 -2
172141-70110	70	48
172141-70150	70	50
172141-70160	70	51
172141-70410	70	40
172141-70420	70	41
172141-70450	70	4
172141-70460	70	5

Parts No.	Fig. No.	Ref. No.
172141-70470	70	6
172141-72190	64	13
	65	14
	68	3
172141-72250	64	24
	66	13
	67	8
172141-72690	68	9
172141-73770	82	4
172141-76180	84	6
		8
	85	3
		5
	86	13
	88	8
	91	4
	92	2
	93	4
		11
172141-76220	86	17
172141-76920	85	11
172141-77800	94	1
172141-84601	99	19
172142-57610	35	9
172142-62300	37	11
172142-72260	67	9
172142-72510	66	14
172142-72560	66	21
172142-72951	67	20
172142-73800	72	7
172142-76181	85	7
172142-76270	87	13
172142-76280	87	15
172142-76940	90	11
172142-76950	90	12
172142-77040	87	14
172142-77050	87	16
172142-81620	97	3
172142-82310	95	10
172142-94241-W	101	8
172146-45610	30	28
172146-61370	37	5
	39	4
172146-73730	82	5
172146-82910	96	21
172147-70120	70	49
172147-70220	70	2
172147-70280	71	32
172147-70330	71	34
172147-70390	71	37

Download full manual at youfixthis.com

PREVIEW - YOUFIXTHIS.COM

VEHICLE PAINTED COLOR

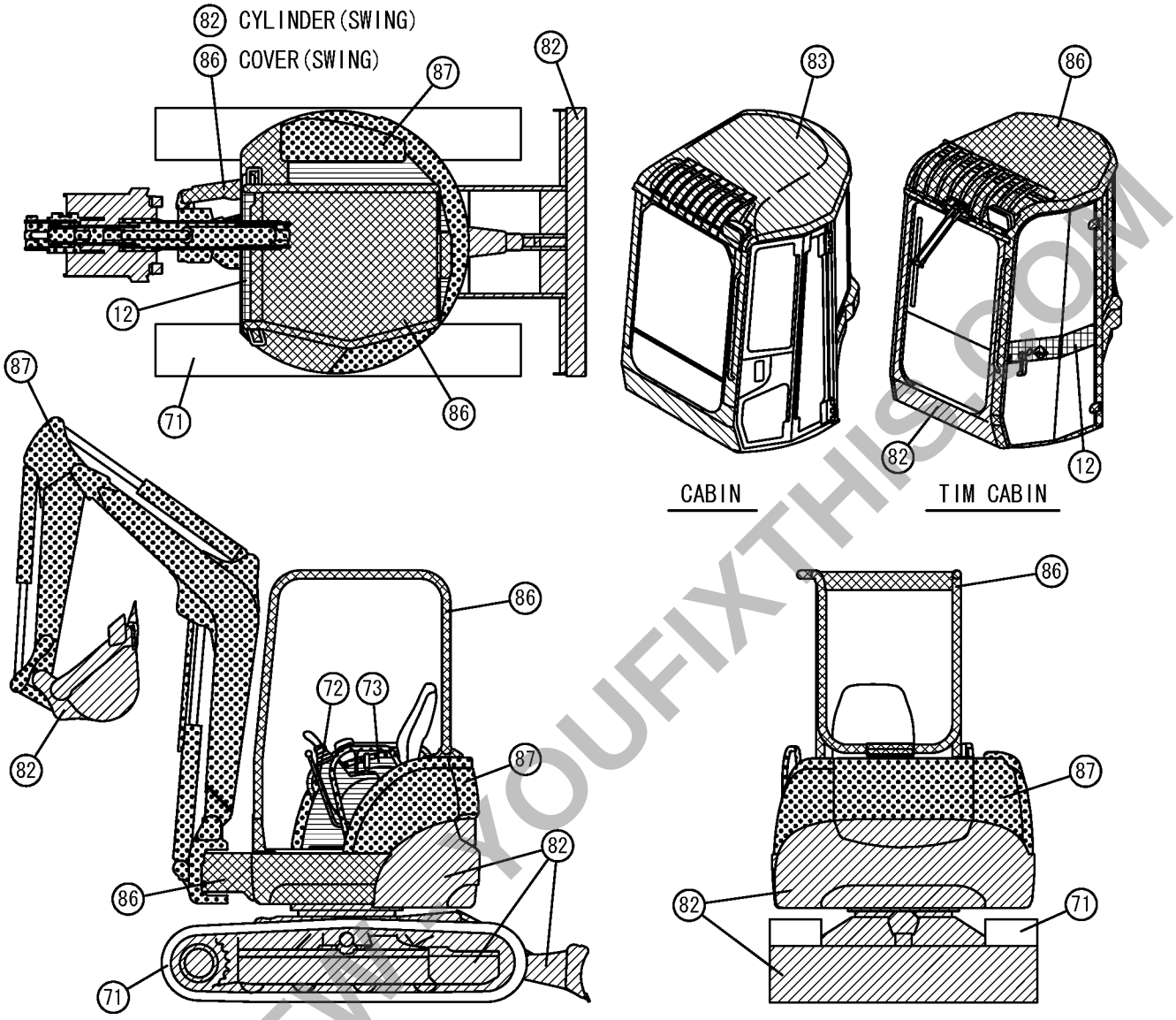

Color Code	Desc-ription	Painted Color	Munsel No.	Paint Part No.		
				16L Can	4L Can	SPRAY
82		YANMAR Deep Green	6.39BG2.13/1.73	981101-09517	977620-40820	977620-30N31
87		YANMAR New Permanent Yellow	5.15Y8.45/10.81	981101-09519	977620-40870	977620-30871
86		YANMAR New Grayish Green	2.62BG4.76/2.87	981101-09616	977620-40860	977620-30861
72		YANMAR Dark Olive Gray	7.21Y2.92/0.79	-------	977620-40720	TOR-90460003
73		YANMAR Warm Gray	5.52Y4.91/1.09	-------	-------	TOR-90450003
12		YANMAR Black	4.90PB0.08/0.41	-------	TOR-91220001	TOR-90220003
83		YANMAR Grayish Green	2.15G4.87/1.52	981101-09615	977620-40830	977620-30N41
71		YANMAR Charcoal Gray	N-1.80	981101-09516	977620-40710	977620-30371

PREVIEW - YOUFIXTHIS.COM
Download full manual at youfixthis.com

Fig.32. P.T.O. PEDAL

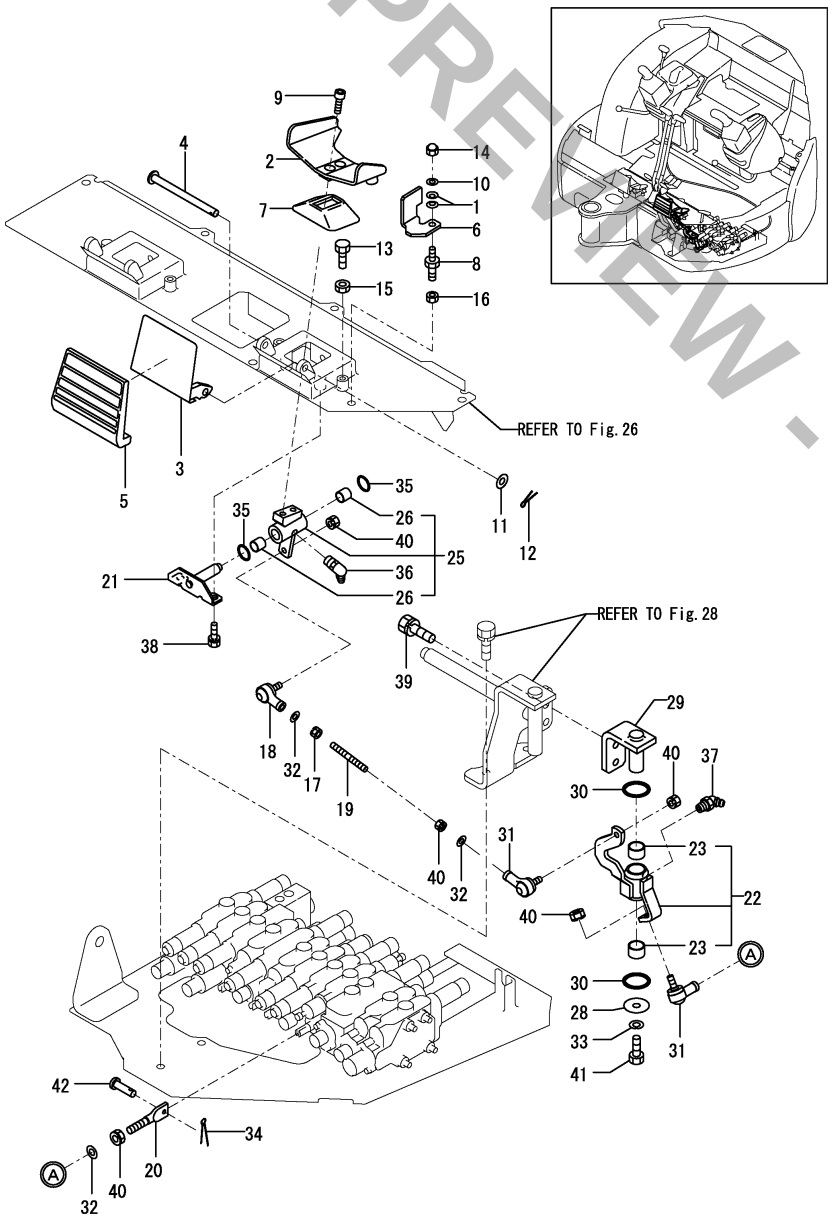

(A)=VIO27-3 C(US)
(B)=VIO27-3 P(US)
(C)=VIO27-3 C(AS)
(D)=VIO27-3 P(AS)
(E)=VIO27-3 C(NZ)
(F)=VIO27-3 P(NZ)

No.	Lev.	Parts No.	Description	Q'ty (A)	(B)	(C)	(D)	(E)	(F)	I	R
1	1	172068-28490	SPRING	2	2	2	2	2	2		
2	1	172472-45500	PEDAL, PTO	1	1	1	1	1	1		
3	1	172458-45540	COVER, PEDAL	1	1	1	1	1	1		1
4	1	172187-45651	SHAFT	1	1	1	1	1	1		
5	1	172187-45760	PAD	1	1	1	1	1	1		
6	1	172448-45800	PLATE, LOCK	1	1	1	1	1	1		2
7	1	172157-45990	BOOT, PEDAL	1	1	1	1	1	1		
8	1	172462-46230	BOLT	1	1	1	1	1	1		
9	1	172165-46340	BOLT	2	2	2	2	2	2		
10	1	22137-080000	WASHER, 8	1	1	1	1	1	1		
11	1	22137-100000	WASHER, 10	1	1	1	1	1	1		
12	1	22417-250200	PIN, COTTER 2.5X20	1	1	1	1	1	1		
13	1	26116-080254	BOLT, M8X 25 PLATED	2	2	2	2	2	2		
14	1	26347-080002	NUT, M8	1	1	1	1	1	1		
15	1	26716-080002	NUT, M8	2	2	2	2	2	2		
16	1	26757-100002	NUT, LOCK M10	1	1	1	1	1	1		
17	1	194200-37780	NUT, M8	1	1	1	1	1	1		
18	1	172734-41300	JOINT, BALL	1	1	1	1	1	1		
19	1	172732-42450	ROD	1	1	1	1	1	1		
20	1	172823-45000	ROD, SPOOL	1	1	1	1	1	1		
21	1	172458-45230	SHAFT, PEDAL	1	1	1	1	1	1		
22	1	172472-45300	LINK, PTO	1	1	1	1	1	1		
23	2	172141-41370	BUSH	2	2	2	2	2	2		
25	1	172472-45330	LINK ASSY, PTO	1	1	1	1	1	1		
26	2	172141-41370	BUSH	2	2	2	2	2	2		
28	1	1A1040-45890	WASHER, 10X36X4.5	1	1	1	1	1	1		
29	1	172458-46150	BRACKET, PTO	1	1	1	1	1	1		
30	1	172124-46200	O-RING	2	2	2	2	2	2		
31	1	172122-46590	ELBOW	2	2	2	2	2	2		
32	1	22117-080000	WASHER, 8	3	3	3	3	3	3		
33	1	22217-100000	WASHER, SPRING 10	1	1	1	1	1	1		
34	1	22417-160160	PIN, COTTER 1.6X16	1	1	1	1	1	1		
35	1	24311-000210	O-RING, 1AP21.0	2	2	2	2	2	2		
36	1	24761-040000	NIPPLE, GREASE B	1	1	1	1	1	1		
37	1	24761-050000	NIPPLE, GREASE C	1	1	1	1	1	1		
38	1	26013-080162	BOLT, M8X 16	2	2	2	2	2	2		
39	1	26013-100202	BOLT, M10X 20	2	2	2	2	2	2		
40	1	26051-080002	NUT, M8	5	5	5	5	5	5		
41	1	26116-100202	BOLT, M10X 20 PLATED	1	1	1	1	1	1		
42	1	933110-54100	PIN	1	1	1	1	1	1		
43A	1	172496-03250	LABEL, PTO		1		1		1		3
44A	1	172458-03240	LABEL, LOCK	1	1	1	1	1	1		3

Remarks
(1)Attach the No.43A label to this part.
(2)Attach the No.44A label to this part.
(3)Label is not illustrated.

N:Old $\overset{\text{Yes}}{\underset{\text{No}}{\rightleftarrows}}$ New, Q:Old $\overset{\text{No}}{\underset{\text{Yes}}{\rightleftarrows}}$ New, R:Old $\overset{\text{Yes}}{\underset{\text{Yes}}{\rightleftarrows}}$ New, S:Old $\overset{\text{No}}{\underset{\text{No}}{\rightleftarrows}}$ New, W:Add, Z:Discontinued, F:Interchangeable by set, K:Q'ty Change

Copyright (C) YANMAR CO., LTD. All RightsReserved.

PREVIEW - YOUFIXTHIS.COM

Download full manual at youfixthis.com

Fig.70. TRAVEL MOTOR

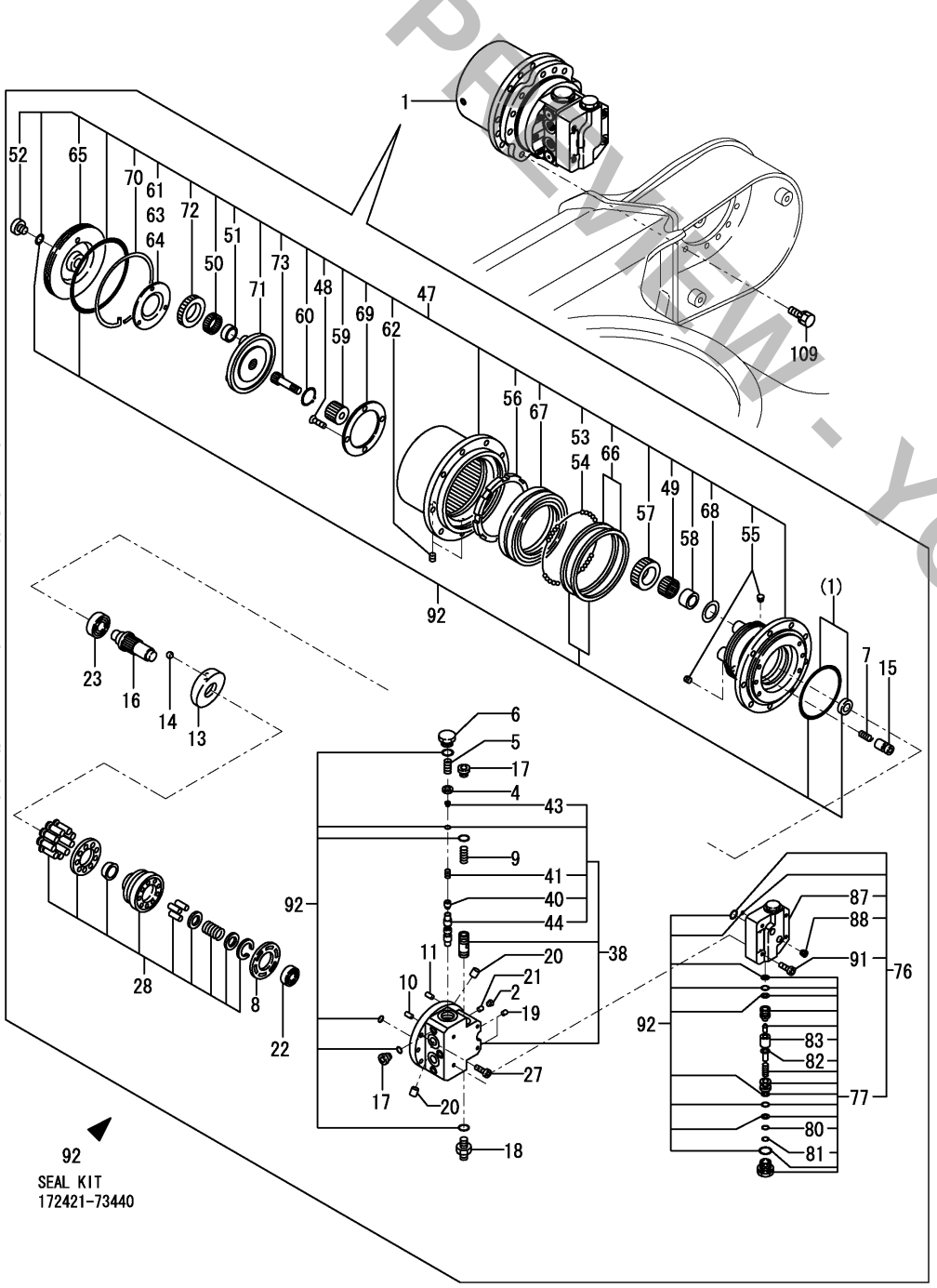

(A)=VIO27-3 C(US)
(B)=VIO27-3 P(US)
(C)=VIO27-3 C(AS)
(D)=VIO27-3 P(AS)
(E)=VIO27-3 C(NZ)
(F)=VIO27-3 P(NZ)

No.	Lev.	Parts No.	Description	Q'ty (A)	(B)	(C)	(D)	(E)	(F)	I	R
1	1	172457-73700-1	MOTOR ASSY, TRAVEL	2	2	2	2	2	2		
2	2	172147-70220	PLUG	4	4	4	4	4	4		
4	2	172141-70450	SEAT, SPRING	4	4	4	4	4	4		
5	2	172141-70460	SPRING	4	4	4	4	4	4		
6	2	172141-70470	CAP	4	4	4	4	4	4		
7	2	172168-71950	SPRING	4	4	4	4	4	4		
8	2	172638-73330	PLATE, VALVE	2	2	2	2	2	2		
9	2	172421-73400	SPRING	2	2	2	2	2	2		
10	2	172122-73470	PIN	2	2	2	2	2	2		
11	2	172122-73480	PIN	4	4	4	4	4	4		
13	2	172450-73500	PLATE, SWASH	2	2	2	2	2	2		
14	2	172450-73510	BALL, STEEL	4	4	4	4	4	4		
15	2	172450-73550	PISTON ASSY	4	4	4	4	4	4		
16	2	172183-73670	SHAFT	2	2	2	2	2	2		
17	2	172183-73770	PLUG	6	6	6	6	6	6		
18	2	172183-73780	PLUG	2	2	2	2	2	2		
19	2	172183-73870	PLUG	8	8	8	8	8	8		
20	2	172312-74790	ORIFICE	4	4	4	4	4	4		
21	2	172312-74790	ORIFICE	8	8	8	8	8	8		
22	2	24101-060024	BEARING, BALL 6002	2	2	2	2	2	2		
23	2	24101-060044	BEARING, BALL 6004	2	2	2	2	2	2		
27	2	26450-080202	BOLT, M8X 20	12	12	12	12	12	12		
28	2	172450-73620	BLOCK KIT, CYLINDER	2	2	2	2	2	2		
38	2	172421-73450	BASE PLATE ASSY	2	2	2	2	2	2		
40	4	172141-70410	VALVE, CHECK	4	4	4	4	4	4		
41	4	172141-70420	SPRING	4	4	4	4	4	4		
43	4	172421-73380	PLUG	4	4	4	4	4	4		
44	4	172183-73730	PLUNGER	2	2	2	2	2	2		
47	2	172457-73720	GEAR, REDUCTION	2	2	2	2	2	2		
48	3	172141-70110	SCREW	8	8	8	8	8	8		
49	3	172147-70120	GAUGE ASSY	8	8	8	8	8	8		
50	3	172141-70150	GAUGE, W/ROLLER	6	6	6	6	6	6		
51	3	172141-70160	RACE, INNER	6	6	6	6	6	6		
52	3	172148-70301	PLUG	4	4	4	4	4	4		
53	3	172122-70350	BALL, STEEL	198	198	198	198	198	198		
54	3	172122-70350	BALL, STEEL	20	20	20	20	20	20		
55	3	172450-73330	PLUG	4	4	4	4	4	4		
56	3	172456-73350	NUT, RING	2	2	2	2	2	2		
57	3	172456-73360	GEAR, PLANETARY	8	8	8	8	8	8		
58	3	172456-73370	INNER RACE	8	8	8	8	8	8		
59	3	172456-73380	GEAR, SUN	2	2	2	2	2	2		
60	3	172456-73390	SNAP RING	2	2	2	2	2	2		
61	3	172456-73420	THRUST PLATE	2	2	2	2	2	2		
62	3	172122-73430	PLUG	4	4	4	4	4	4		
63	3	172456-73430	THRUST PLATE	2	2	2	2	2	2		
64	3	172456-73440	THRUST PLATE	2	2	2	2	2	2		
65	3	172456-73450	COVER	2	2	2	2	2	2		
66	3	172183-73510	SEAL, FLOATING	2	2	2	2	2	2		
67	3	172183-73520	BEARING	2	2	2	2	2	2		
68	3	172183-73560	WASHER, THRUST	8	8	8	8	8	8		
69	3	172183-73570	PLATE, THRUST	2	2	2	2	2	2		

N:Old ⇔ New (Yes/No), Q:Old ⇔ New (No/Yes), R:Old ⇔ New (Yes/Yes), S:Old ⇔ New (No/No), W:Add, Z:Discontinued, F:Interchangeable by set, K:Q'ty Change

++ CONTINUE ++

Copyright (C) YANMAR CO., LTD. All RightsReserved.

PREVIEW - YOUFIXTHIS.COM

Download full manual at youfixthis.com

PREVIEW ONLY

You're viewing 12 of 142 pages

The full manual includes:

- All 142 pages, complete
- Searchable PDF (find any keyword)
- No watermarks
- Instant download
- Print-ready quality

GET FULL MANUAL NOW

Yanmar Vio27-3 C(US), Vio27-3 P(US), Vio27-3 C(AS), Vio27-3 P(AS), Vio27-3 C(NZ), Vio27-3 P(NZ) Parts Catalog

Scan or click anywhere
youfixthis.com

Click anywhere on this page to get the full manual