4. Anticorrosion Zinc

4-1 Principles

Anticorrosion zinc is installed to prevent electrolytic corrosion by sea water.

When different metals, i.e., iron and copper, are placed in an highly conductive liquid, such as sea water, the iron gradually rusts. The anticorrosion zinc provides protection against corrosion by corroding in place of the cylinder, cylinder liners and other iron parts.

Anticorrosion zinc is provided at the cylinder water jacket.

Replace the anticorrosion zinc after 50% corrosion.

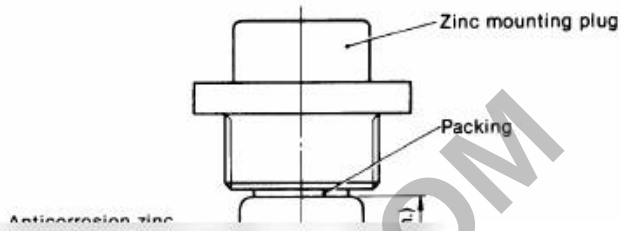

PREVIEW - YOUFIXTHIS.COM

Blurred on purpose. The manual you buy has this page in full quality.

Download full manual at youfixthis.com

6. Engine Cross-section



PREVIEW - YOUFIXTHIS.COM
Blurred on purpose. The manual you buy has this page in full quality.
Download full manual at youfixthis.com

1. Hold-down clamp Roller
   Check the roller surface for damage and wear. If it is seriously damaged or worn out, replace the roller. Make sure that the roller rotates smoothly.

mm (in.)

	YSM8-R YSM12-R YSM8-Y YSM12-Y	
	Standard dimensions	Wear limit dimension
Outside diameter of roller	15 (0.5906)	14.5 (0.5709)

2. Clearance between roller and hold-down clamp case.

mm (in.)

	Standard dimensions	Clearance at assembly	Wear limit

PREVIEW - YOUFIXTHIS.COM

Blurred on purpose. The manual you buy has this page in full quality.

Download full manual at youfixthis.com

CHAPTER 2

BASIC ENGINE

1. Cylinder Block 2-1
2. Cylinder Liner 2-3
3. Cylinder Head 2-6
4. Piston 2-17
5. Connecting Rod 2-22
6. Crankshaft 2-26
7. Camshaft 2-31
8. Timing gear 2-34

PREVIEW - YOUFIXTHIS.COM

Download full manual at youfixthis.com

1. Starting System Construction

Model	Standard specifications	special specifications
YSM8-R YSM12-R	Overdrive hand-operated starting system and electric starting system installed side by side	Chain-overdrive hand-operated starting system
YSM8-Y YSM12-Y	Overdrive hand-operated starting system	Chain-overdrive hand-operated starting system

PREVIEW - YOUFIXTHIS.COM

Blurred on purpose. The manual you buy has this page in full quality.

Download full manual at youfixthis.com

7. Exterior Views

7-1 YSM8-R

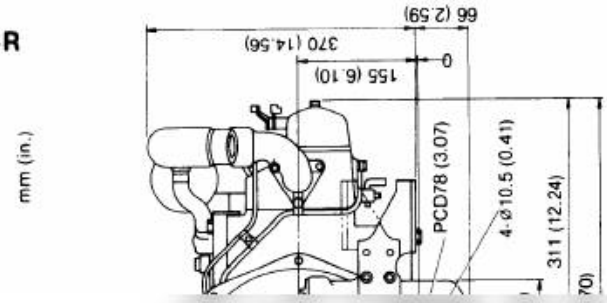

PREVIEW - YOUFIXTHIS.COM

Blurred on purpose. The manual you buy has this page in full quality.

Download full manual at youfixthis.com

CHAPTER 14

DISASSEMBLY AND REASSEMBLY

1. Disassembly and Reassembly Precautions 14-1
2. Disassembly and Reassembly Tools 14-2
3. Other 14-11
4. Disassembly 14-12
5. Reassembly 14-16
6. Tightening Torque 14-21
7. Packing Supptement and Adhesives 14-22

PREVIEW - YOUFIXTHIS.COM

Download full manual at youfixthis.com

CHAPTER 1

GENERAL

1. Exterior Views. 1-1
2. Specifications. 1-2
3. Principal Construction 1-3
4. Performance Curves 1-4
5. Features 1-6
6. Engine Cross-Section 1-7
7. Exterior Views 1-8
8. System Diagrams 1-12
9. Accessories 1-19

PREVIEW - YOUFIXTHIS.COM

Download full manual at youfixthis.com

6. Crankshaft

6-1 Crankshaft ass'y and bearing construction

The crankshaft is stamp-forged,and the crank pin and journal sections are high-frequency induction hardened and ground and polished to a high precision finish. Therefore, the contact surface with the bushing is excellent and durability is superb.

The crankshaft is supported by two types of main bearing, namely, the main bearing for the cylinder body and the main bearing for the mounting flange. On one end the flywheel is mounted and on the other end is the crankshaft gear. In order to effect the proper balance, a balancing weight is mounted on each crank arm by serration matching.

The oil passage for the crankshaft journal and pin is shaped (see the diagram) so that the crankshaft can withstand low and high-speed operations.

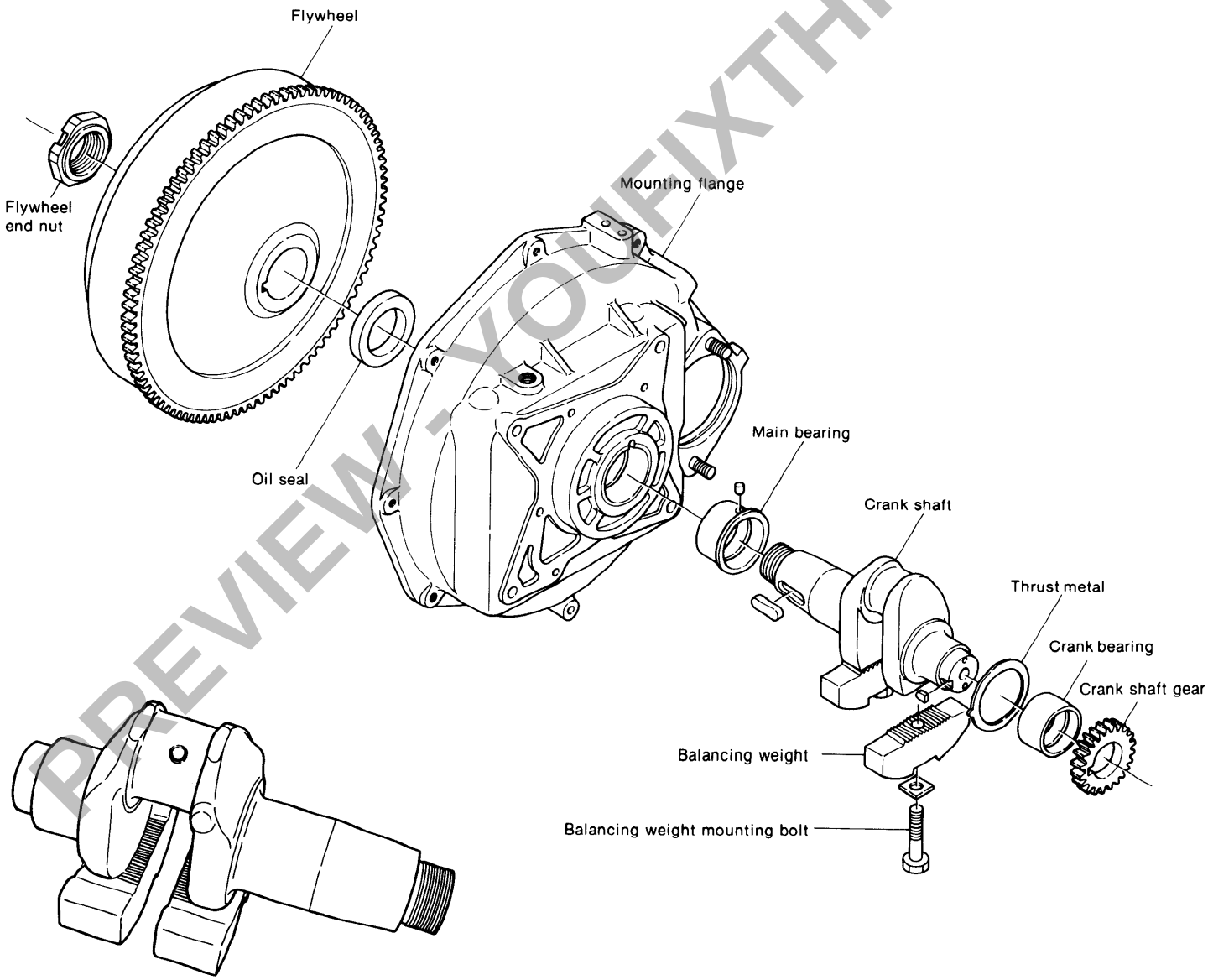

PREVIEW - YOUFIXTHIS.COM

Printed in Japan
A0A1001 8311

Download full manual at youfixthis.com

CHAPTER 6

LUBRICATION SYSTEM

1. Lubrication System 6-1
2. Oil Pump 6-3
3. Oil Filter 6-6
4. Oil Pressure Regulator Valve 6-7

PREVIEW - YOUFIXTHIS.COM

Download full manual at youfixthis.com

5. Fit the clutch housing B into place and tighten the clamp bolt.
   Align the mark on housing B with that on the V-lever.

kg-m (ft-lb)

Tightening torque	2.3 to 2.7 (16.63 ~ 19.52)

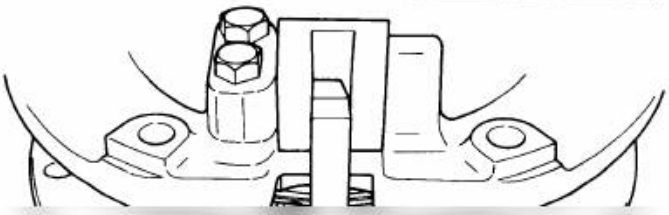

PREVIEW - YOUFIXTHIS.COM

Blurred on purpose. The manual you buy has this page in full quality.

Download full manual at youfixthis.com

4. Interior Piping and Wiring

4-1 Exhaust pipe

4-1.1 Exhaust silencer installation



(2) Precautions

1) Always use an exhaust elbow when the direction of the exhaust must be changed.
2) Clamp the pipe to the hull at suitable positions.
3) Decide the exhaust silencer installation position according to the structure of the hull, but since the silencer reaches a high temperature, it should protrude past the cabin.
4) When piping the exhaust, the prevention of heat

Blurred on purpose. The manual you buy has this page in full quality.

PREVIEW - YOUFIXTHIS.COM

Download full manual at youfixthis.com

PREVIEW ONLY

You're viewing 12 of 240 pages

The full manual includes:

- All 240 pages, complete
- Searchable PDF (find any keyword)
- No watermarks
- Instant download
- Print-ready quality

GET FULL MANUAL NOW

Yanmar YSM8-R, YSM8-Y, YSM12-R, YSM12-Y, YSM Service Manual

Scan or click anywhere
youfixthis.com

Click anywhere on this page to get the full manual