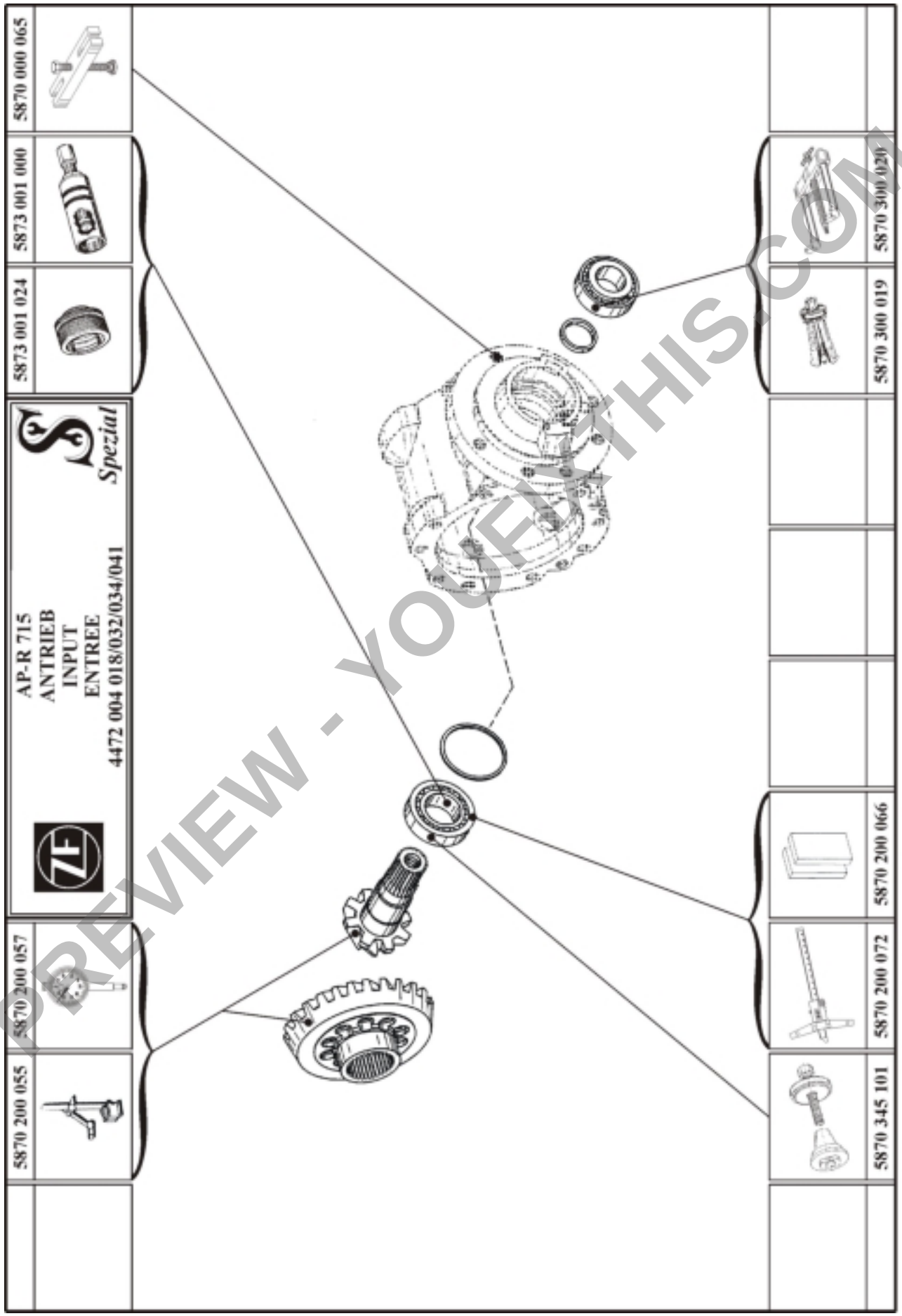

PREVIEW - YOUFIXTHIS.COM

Download full manual at youfixthis.com

TORQUE LIMITS FOR SCREWS (IN Nm) AS PER ZF-STANDARD 148

Friction coefficient: μ total = 0.12 for screws and nuts without aftertreatment as well as for phosphated nuts. Tightening by hand!

If not otherwise specified, tightening torques may be taken from the following list:

Metric ISO-standard thread DIN 13, sheet 13

Dimension	8.8		10.9		12.9
M4	2.8		4.1		4.8
M5	5.5		8,1		9,5
M6	9.5		14		16,5
M7	15		23		28
M8	23		34		40
M10	46		68		79
M12	79		115		135
M14	125		185		215
M16	195		280		330
M18	280		390		460
M20	390		560		650
M22	530		750		880
M24	670		960		1100
M27	1000		1400		1650
M30	1350		1900		2250
M33	1850		2600		3000
M36	2350		3300		3900
M39	3000		4300		5100

Metric ISO fine thread DIN 13, sheet 13

Dimension	8.8		10.9		12.9
M 8 x 1	24		36		43
M 9 x 1	36		53		62
M 10 x 1	52		76		89
M 10 x 1.25	49		72		84
M 12 x 1.25	87		125		150
M 12 x 1.5	83		120		145
M 14 x 1.5	135		200		235
M 16 x 1.5	205		300		360
M 18 x 1.5	310		440		520
M 18 x 2	290		420		490
M 20 x 1.5	430		620		720
M 22 x 1.5	580		820		960
M 24 x 1.5	760		1100		1250
M 24 x 2	730		1050		1200
M 27 x 1.5	1100		1600		1850
M 27 x 2	1050		1500		1800
M 30 x 1.5	1550		2200		2550
M 30 x 2	1500		2100		2500
M33 x 1.5	2050		2900		3400
M 33 x 2	2000		2800		3300
M 36 x 1.5	2700		3800		4450
M 36 x 3	2500		3500		4100
M 39 x 1.5	3450		4900		5700
M 39 x 3	3200		4600		5300

PREVIEW - YOUFIXTHIS.COM

Download full manual at youfixthis.com

DISASSEMBLY of the ZF-axle AP-R 715



Fig. 1

Mount axle onto assembly carriage.
(Illustration shows axle with flange brake)

(S) Assembly carriage	5870 350 000
(S) Supporting angle	5870 350 106

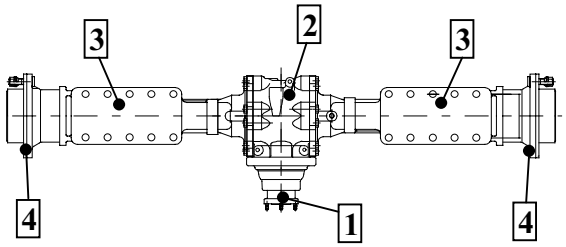

Fig. 2

1. AXLE VERSIONS
"without" flange brake or axle transmission case (standard),
"with" flange brake or "with" axle transmission case:

1.1 VERSION - STANDARD:
("without" flange brake or axle transmission case)

Legend to sketch:
1 = Input flange
2 = Axle drive housing
3 = Axle casing
4 = Output

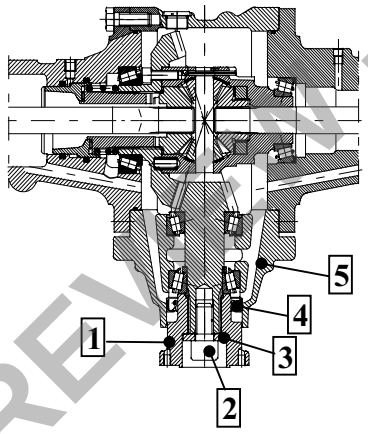

Fig. 3

Legend to sketch:

1 = Input flange
2 = Cylindrical bolt
3 = Disc
4 = Shaft sealing ring
5 = Axle drive housing

Loosen cylindrical bolt (2) and withdraw flange (1) with disc (3).

☞ The hexagon bolt is inserted with Loctite (if required, heat up – disassembly aid)!

☞ Then, the shaft sealing ring can be disassembled (see Fig.-No. 25/page 3/7).

(S) Clamping fork	5870 240 025
(S) Hot-air blower 230V	5870 221 500
(S) Hot-air blower 115V	5870 221 501

PREVIEW - YOUFIXTHIS.COM

Download full manual at youfixthis.com

TECHNICAL DATA AND SETTING OF THE ZF-PLANETARY AXLE "AP-R 715"

AXLE ARRANGEMENT – depending on version ..: Front- or rear axle
OUTPUT ..... : Planetary drive

DIFFERENTIAL - depending on version .: - Standard differential Type D 250
- Self-locking differential Type DZ 250 (45 %)
- DHK(100% lock)

(DHK = Differential – hydraulically engaged)

INPUT – depending on version .....: - Standard (without brake or axle transmission case)
- with flange brake (BHF-brake)
- with drum brake (Hydr. Simplex- or Servo brake)
- 1 axle transmission case-150 or 1 axle transmission case 185

OIL QUALITY .....: as per ZF-list of lubricants TE-ML 05

OIL FILLING VOLUME – depending on version : * Axle casing abt. 3.5 ..... 4.0 litres
* per planetary drive abt. 0.3 ..... 0.4 litres
* axle transmission case abt. 1.0 litre

REFERENCE TO *: **Binding is an oil level up to the marking or to the overflow at the filling- and control screws!**

ROLLING MOMENT - INPUT PINION SUPPORT (WITHOUT SHAFT SEALING RING)...: 1.5 ... 2.5 Nm

ROLLING MOMENT - DIFFERENTIAL SUPPORT) .....: 1.0 ... 4.0 Nm
For new roller bearing - aim at upper value!

BACKLASH (Pinion/Crown wheel) .....: 0.15 ... 0.27 Nm

TIGHTENING TORQUE at the input flange:
depending on version – cylindrical bolt or hexagon bolt (M 20x1.5/10.9) .....: 400 Nm

Decisive, however, is the bearing rolling moment of the input pinion support!

PREVIEW - YOUFIXTHIS.COM

Download full manual at youfixthis.com

LUBRICATION- AND MAINTENANCE INSTRUCTIONS

1. Oil quality

Only oils are permitted to be used which have the qualification according to the ZF-list of lubricants TE-ML 05!

The ZF lists of lubricants are updated every two years and can be obtained or studied as follows:

- in all ZF works
- in all ZF After-Sales Service Centres
- Intranet http://web.zfp.zf-group.de/ **("Menu" → ZF - deutsch/english - Information - Techn. Information)**
- Intranet http://www.zf-group.de/ **("Menu" → - deutsch/english – Information – Techn. Information)**

In the respective ZF lists of lubricants, you will find information on the following:

Oil specification	-	**Manufacturer**	-	**Product designation**
such as Transmission oils without and with Limited-Slip additives etc. .... Grease for lubricating points ...		.....		.....

2. Oil change

Drain oil with the axle at operating temperature and the vehicle in a horizontal position.
A further condition is the horizontal installation position – in either direction – of the axle.
All draining-, filling- and control screws must be thoroughly cleaned prior to opening.

2.1 Oil drain hole - output

To avoid injuries due to a possible pressure build-up in the oil circuit of the planet carrier, bring filling- or control screw (1) into the 'noon' clock position and carefully unscrew it.
Then, bring drain bore into the '6 o'clock' position and drain oil.

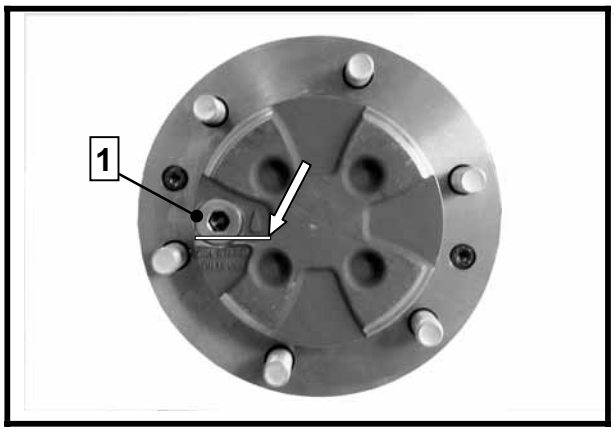

2.2 Oil filling - output

Bring filling bore into position (reference line horizontal to the driving level, see arrow) and fill in oil up to the overflow.
Mount new O-ring onto screw plug (1) and mount it.
Tightening torque (M24 x 1,5) ..... M_A = 70 Nm

2.3 Oil drain hole – axle casing

Unfix drain plug (2) and drain oil.

PREVIEW - YOUFIXTHIS.COM

Download full manual at youfixthis.com

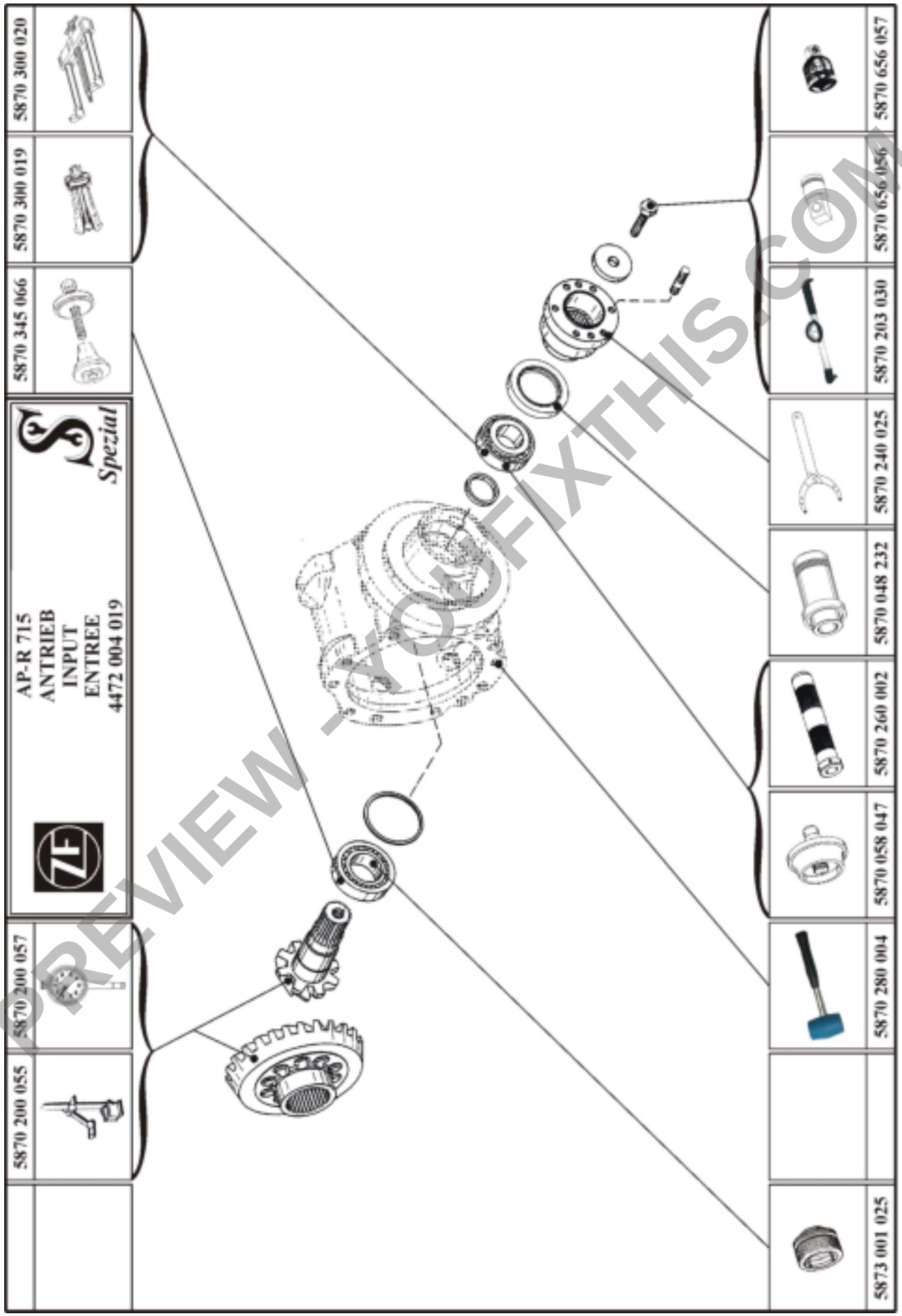

ZF Passau GmbH Donaustraße 25-71 94034 Passau

Ausgabe:/Edition: 09/2001

PREVIEW - YOUFIXTHIS.COM

Download full manual at youfixthis.com

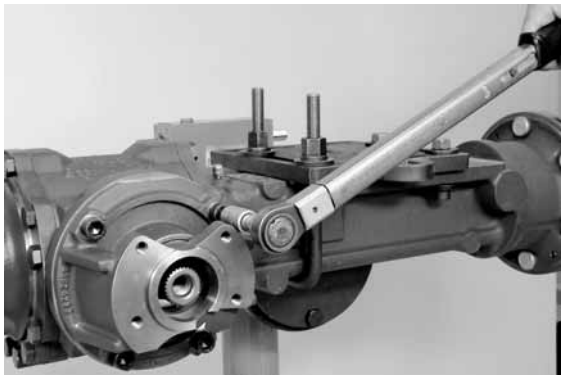

Fig. 5

Line up brake carrier and fasten it with cylindrical screw.

Tightening torque (M14/8.8) ..... M_A = 125 Nm

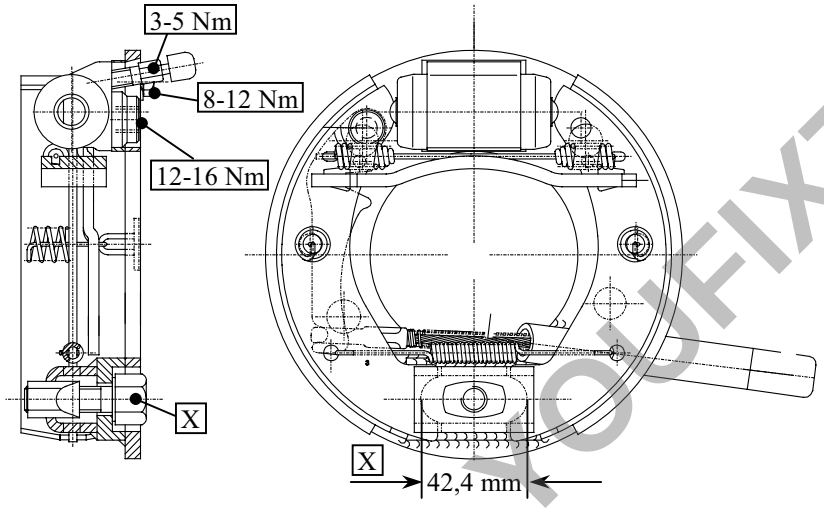

Fig. 6

Pre-assemble brake anchor plate.

Tightening torques:

Wheel brake cylinder M_A = 8 - 12 Nm
Venting plug M_A = 3 - 5 Nm
Pressure connection M_A = 12 - 16 Nm

☞ Adjust resetting unit "X" to dimension 42.40 mm prior to the assembly of the brake shoes.



Fig. 7

Individual components of the Hydraulic – Simplex – Brake.

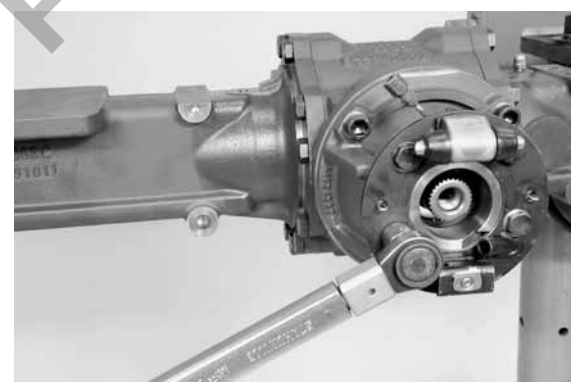

Fig. 8

Line up pre-assembled brake anchor plate and fasten it.

Tightening torque (M12/10.9) ..... M_A = 115 Nm

PREVIEW - YOUFIXTHIS.COM

Download full manual at youfixthis.com

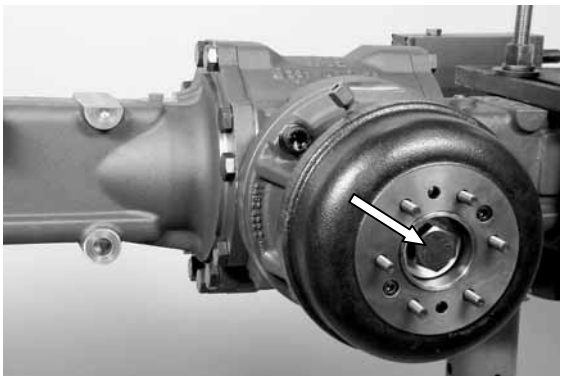

Fig. 4

1.2 VERSION "with" HYDR. SIMPLEX-BRAKE:

Axle AP-R 715 with Hydr. Simplex-Brake (Type 160 x 40).

Works at the brake must be performed duly considering the original "Functioning- and/Maintenance instructions as well as the setting and resetting instructions for the Hydraulic - Simplex – Brake of the component manufacturer
- see Section 6.1.1, page 6/5 ... 6/10!
For supporting purposes, some working steps for the disassembly and assembly are illustrated here.

If required, the complete brake with brake carrier can be disassembled (without dismantling the brake)
(e.g. replacing the shaft sealing ring) – to that end, the hexagon bolt (arrow) must be unscrewed (also see Fig.-No. 7)!

(S) Socket spanner 5870 656 084



Fig. 5

With run-in brake drum – reset resetting device (observe resetting direction).

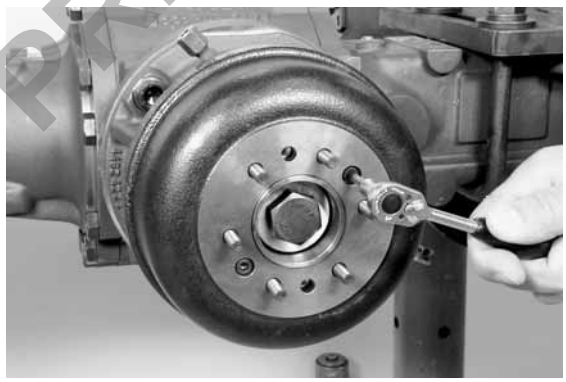

Fig. 6

Unfix both cylindrical bolts and withdraw brake drum

PREVIEW YOUFIXTHIS.COM

Download full manual at youfixthis.com

VERGLEICHSTABELLE FÜR MASSEINHEITEN
CONVERSION TABLE
TABLEAU DE CONVERSION

25,40 mm	=	1 in (inch)
1 kg (Kilogramm)	=	2.205 lb (pounds)
9,81 Nm (1 kpm)	=	7.233 lbf x ft (pound force foot)
1,356 Nm (0,138 kpm)	=	1 lbf x ft (pound force foot)
1 kg / cm	=	5.560 lb / in (pound per inch)
1 bar (1,02 kp/cm^2)	=	14.233 psi (pound force per square inch lbf/in^2)
0,070 bar (0,071 kp/cm^2)	=	1 psi (lbf/in^2)
1 Liter	=	0.264 Gallon (Imp.)
4,456 Liter	=	1 Gallon (Imp.)
1 Liter	=	0,220 Gallon (US)
3,785 Liter	=	1 Gallon (US)
1609,344 m	=	1 Mile (Landmeile)
0 °C (Celsius)	=	+ 32° F (Fahrenheit)
0 °C (Celsius)	=	273.15 Kelvin

PREVIEW - YOUFIXTHIS.COM

Download full manual at youfixthis.com

2.4 Oil filling – axle casing

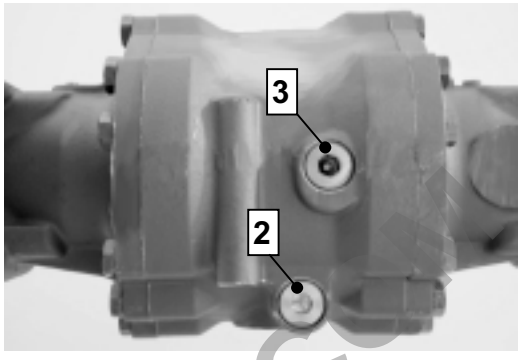

Provide drain plug (2, with magnetic insert) with new O-ring and mount it.
Tightening torque (M24 x 1.5). . . . M_A = 70 Nm

Fill in oil up to the overflow at the filling- or control screw (3).
Provide filling- or control screw with new O-ring and mount it.
Tightening torque . (M24 x 1.5). . . M_A = 70 Nm

After some minutes, check oil level and refill, if necessary, until the specified level is reached and remains constant !

3. Oil changing interval:

1st oil change after 500 operating hours, every further change after 1000 (i.e. after 1500/2500/3500 ... etc.) operating hours, however, at least once per year

Reference: Axles with ZF multi-disc self-locking differential – When using oils without Limited-Slip additives, minor noise can develop which is not critical. If a **strong noise** should develop and the wheel roll by jerks, EP transmission oil with Limited-Slip additives must be used. According products are indicated in the ZF-list of lubricants TE-ML 05.

3.1 Grease lubrication points:

Re-lubrication at the forced lubrication nipples - monthly!
At the grease lubrication point, a multi-purpose grease with the following properties must be used:
Lithium-saponified, drop point above 170°C, NLGI-class 2.
The grease must be corrosion-protecting, water-resistant and walk-stable.

4. Breather:

For the axle versions with breather, the latter must be cleaned and subjected to a functional check within the oil changing intervals as well as upon repairs.

5. Oil level check:

Oil level check every month, in particular however upon starting up of a vehicle with new or repaired axles or axle parts.

6. Oil for multi-disc brake and hydr. 100% lock of the differential:

For the pneumatic-hydraulic actuation or an actuation via accumulator,
1. Engine oil SAE 10 W as per Spec. MIL-L-2104 C, MIL-L-46152, API-CC, CD, SD, SE, SF
2.ATF-oils (Type A Suffix A, Dexron II)
are admitted.
Attention! Other brake fluids are not permitted to be used !.

7. Oil (brake medium) for hydr. Simplex- or Servo brake:

As specified and regulated by the vehicle manufacturer (DIN 51524)

Download full manual at youfixthis.com
PREVIEW - YOUFIXTHIS.COM

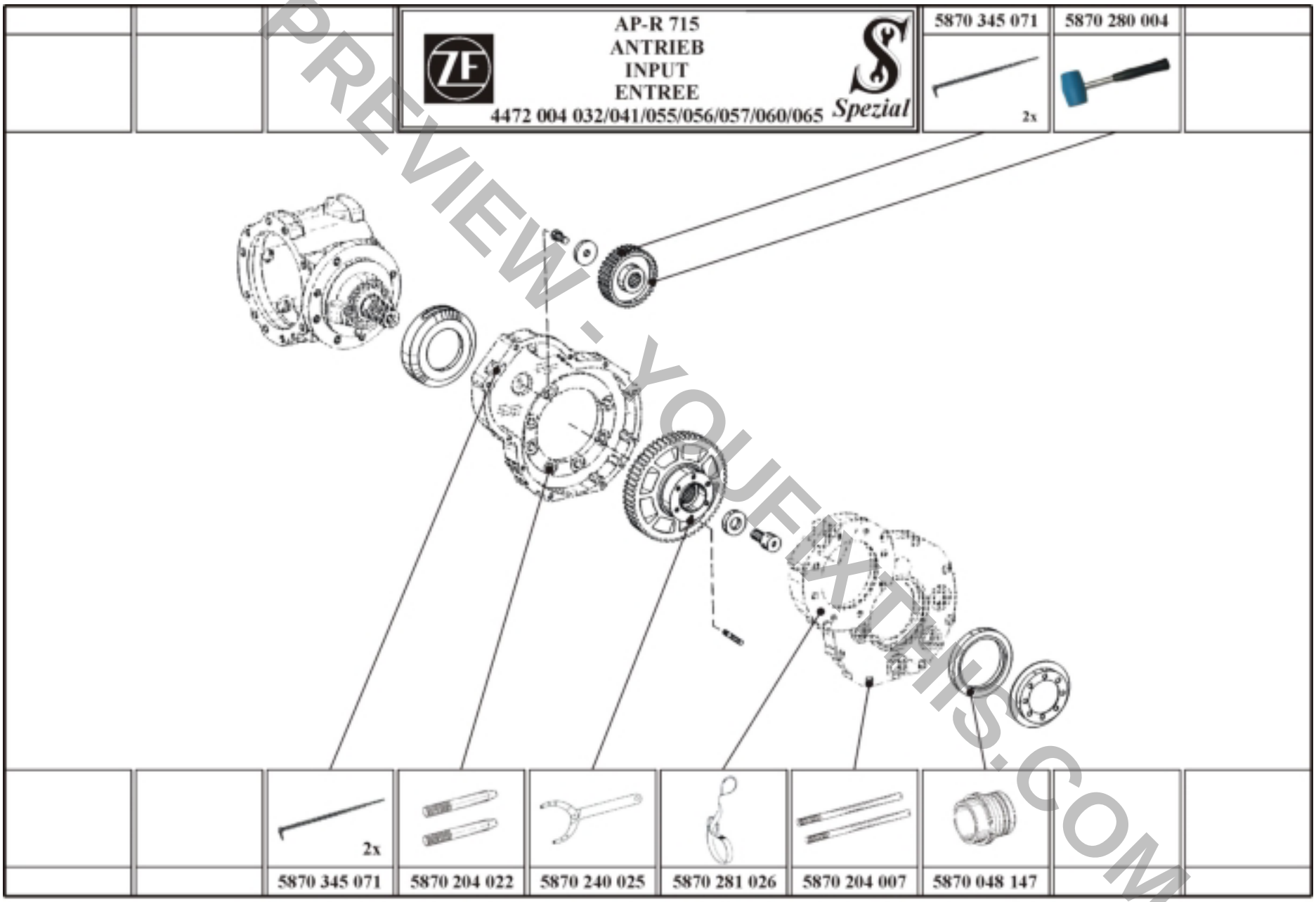

PREVIEW - YOUFIXTHIS.COM

Download full manual at youfixthis.com

ZF Passau GmbH Donaustraße 25-71 94034 Passau
Ausgabe:/Edition: 09/2001

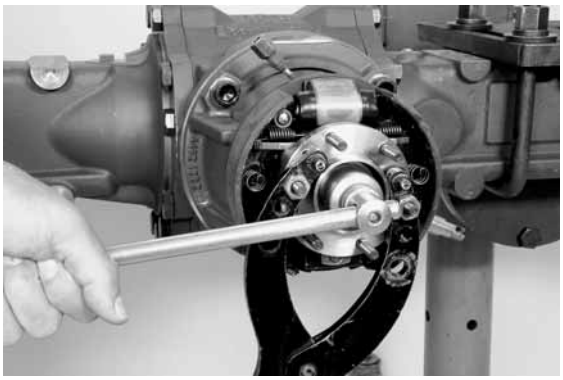

Fig. 7

Unfix hexagon bolt and withdraw flange.

☞ Difficult disassembly – hexagon bolt is inserted with Loctite (heat up, if required)!

(S) Clamping fork	5870 240 025
(S) Hot-air blower 230V	5870 221 500
(S) Hot-air blower 115V	5870 221 501

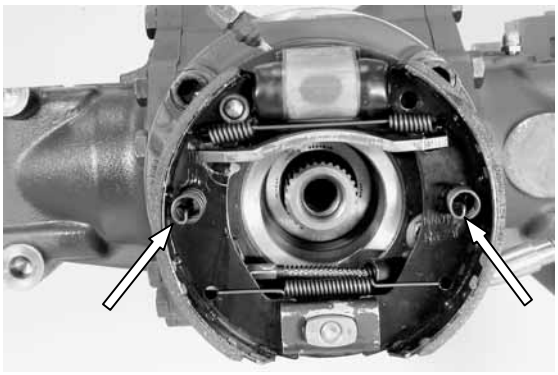

Fig. 8

☞ Unfix both down-holders.

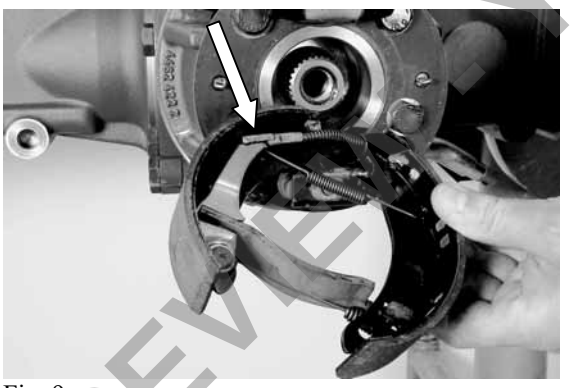

Fig. 9

Withdraw brake shoes and unfix brake control cable (arrow) of the locking brake, remove residual individual components.

☞ Observe bolts (resetting device) becoming loose!

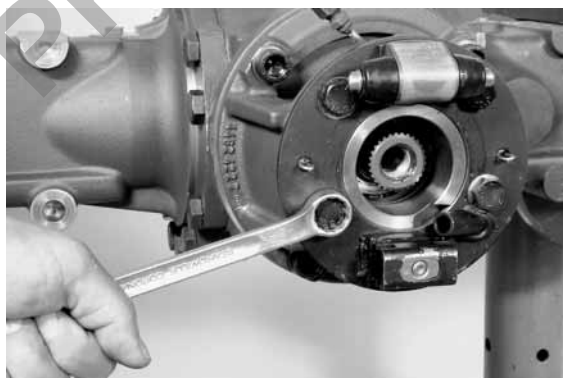

Fig. 10

Unscrew brake resetting bolt and withdraw complete brake anchor plate.

PREVIEW - YOUFIXTHIS.COM

Download full manual at youfixthis.com

PREVIEW ONLY

You're viewing 12 of 130 pages

The full manual includes:

- All 130 pages, complete
- Searchable PDF (find any keyword)
- No watermarks
- Instant download
- Print-ready quality

GET FULL MANUAL NOW

Zf AP-R 715 Service Training

Scan or click anywhere
youfixthis.com

Click anywhere on this page to get the full manual